FRA/ORD-74/17
PB 232-417

9205

Report No. FRA-

ANTI–DERAILMENT SENSOR SYSTEM

Phase 1 Feasibility Study

NOL

Naval Ordnance Laboratory
White Oak, Silver Spring, Md. 20910

April 1973

FINAL REPORT

Prepared for

FEDERAL RAILROAD ADMINISTRATION
Rail Technology Division
Washington, D.C. 20590

12 - Safety

The contents of this report reflect the views of the Naval Ordnance Laboratory which is responsible for the facts and the accuracy of the data presented herein. The contents do not necessarily reflect the official views or policy of the Department of Transportation. This report does not constitute a standard, specification or regulation.

1. Report No.	2. Government Accession No.	3. Recipient's Catalog No.
4. Title and Subtitle ANTI-DERAILMENT SENSOR SYSTEM PHASE I FEASIBILITY STUDY		5. Report Date April 1973 6. Performing Organization Code
7. Author(s) J.H. Armstrong, F.C. Kluge, F.H. Swaim, J.D. Terrell, W.W. Wassmann		8. Performing Organization Report No.
9. Performing Organization Name and Address Naval Ordnance Laboratory White Oak, Silver Spring, Md. 20910		10. Work Unit No. NOL-600/X01-41 11. Contract or Grant No. FRA Doc. Control No. AR-20001
12. Sponsoring Agency Name and Address Federal Railroad Administration 400 7th Street, S.W. Washington, D. C. 20591		13. Type of Report and Period Covered Final Report 14. Sponsoring Agency Code
15. Supplementary Notes		

16. Abstract

In the context of items of hardware which have been developed for military use, principal causes of derailments were studied to determine those amenable to anticipation detection or by on-board sensors. Other elements for relaying sensor outputs and taking appropriate action to prevent or emeliorate the effects of derailment were combined into system concepts. Hardware for key and unique functions was fabricated and tested. Test results and experience data were used to combine the most promising alternatives into systems, for which tangible benefit versus sensor system cost estimates were made. A basic hotbox detector system with phase-change-alloy thermal sensors actuating the train air brake via a self-powered electrical on-car communication system is proposed as feasible, compatible with railroad operating practices, and productive of major net cost benefits. Associated systems for incipient resonant rock-off and local derailment detection are discussed.

17. Key Words	18. Distribution Statement
Railroad Cars Accident Prevention Warning Systems Journal Bearings	

19. Security Classif. (of this report)	20. Security Classif. (of this page)	21. No. of Pages	22. Price
Unclassified	Unclassified	211	

The FRA project engineer for this study is Kenneth B. Ullman, through whom arrangements were made for the air brake rack tests performed by the Westinghouse Air Brake Company (R. B. Wilson, Manager of Railroad Equipment Engineering) and reported herein. Important technical contributions from the following NOL staff members are acknowledged: W. C. Pickler (high-production fuze components); W. J. Buehler (Nitinol alloys); I. D. Yalom (thermal batteries); E. Kilmer (mild detonating cord); S. L. Min (diaphragm cutter); and I. Kabik (electrostatic effects on explosive devices).

TABLE OF CONTENTS

	Page
INTRODUCTION	1
Technology Transfer	1
STATEMENT OF PROBLEM	1
Principal Causes and Frequencies of Derailment	1
Derailment Costs	4
General Constraints on Solution	4
STUDY MATRIX	10
Priority of Detection Methods	10
Detection of Local Derailment	10
SYSTEM STUDY MATRIX	14
Ambient Conditions - General	14
FAILURE MODES AND DETECTION MECHANISMS	17
Incipient Journal Bearing Failure	17
Incipient Wheel Failure	23
Resonant Car-Body Rocking	24
Local Derailment	28
SENSORS/SIGNAL GENERATORS/PREAMPLIFIERS	35
General Requirements	35
Thermal Sensors	35
Low-Melting Alloy Sensors	38
Phase-Change Alloy Sensors	43
The Nitinol Sensor	47
Thermal Sensor Tests	52
Resonant Rock-Off Detectors	59
Local Derailment Detectors	67
ON-CAR COMMUNICATION LINK	72
General Requirements	72
Electrical Systems	72
Detonator-Stressed Piezo-Electric Crystal	73
Thermal Battery	79

Page

Hard Wire On-Car Interconnection Link..... 83

Explosive System..... 87

System Tests..... 89

INTER-CAR COMMUNICATION LINK..... 95

Radio-Frequency Link..... 95

PRIMARY OUTPUT..... 99

General Considerations..... 99

Train Radio Alarm..... 101

Direct Air Brake Application..... 102

TROUBLE LOCALIZATION..... 110

General Considerations..... 110

Specific Principles Considered..... 110

SYSTEM CONCEPTS, COSTS AND BENEFITS..... 113

Basic (Hotbox) Sensor System..... 113

Resonant Rock-Off Detector System..... 119

Local Derailment Detector System..... 122

CONCLUSIONS..... 125

Hotbox Detector System..... 125

Resonant Rock-Off Detector System..... 125

APPENDIX A - DERAILMENT COST VERSUS INVESTMENT..... A-1

APPENDIX B - UNSPRUNG VIBRATION/SHOCK ENVIRONMENT..... B-1

APPENDIX C - WHEEL-LIFT CALCULATIONS..... C-1

APPENDIX D - DYNAMIC ANALYSIS OF WHEEL MOTION DURING DERAILMENT.. D-1

APPENDIX E - EXCERPTS FROM MILITARY STANDARD 331 FUZE AND FUZE COMPONENTS, ENVIRONMENTAL AND PERFORMANCE TESTS FOR..... E-1

APPENDIX F - SOME PHYSICAL AND MECHANICAL PROPERTIES OF NOMINAL 55-NITINOL..... F-1

APPENDIX G - PROCESSING OF NITINOL THERMAL PIN..... G-1

APPENDIX H - THERMAL SENSOR DESIGN SUMMARY..... H-1

APPENDIX I - EXCERPTS FROM WEAPON SPECIFICATIONS FOR ROCKEYE II IMPACT SENSING ELEMENT ASSEMBLY..... I-1

Page

APPENDIX J - REPRESENTATIVE PULSE THERMAL BATTERY CHARACTERISTICS FOR SENSOR OUTPUT..... J-1

APPENDIX K - MILD/CONFINED/SHIELDED DETONATING CORD TECHNICAL BACKGROUND WITH REFERENCE TO ON-CAR COMMUNICATION LINK APPLICATION..... K-1

APPENDIX L - PIEZO ELEMENT ON-CAR COMMUNICATION LINK SYSTEM TEST SET-UPS AND CALIBRATION..... L-1

APPENDIX M - BELLOWS MOTOR CHARACTERISTICS..... M-1

APPENDIX N - NOISELESS BUTTON BOMBLET (NBB) CHARACTERISTICS..... N-1

APPENDIX O - RACK DEMONSTRATION-ABD FREIGHT EQUIPMENT..... O-1

APPENDIX P - DESIGN OF DIAPHRAGM CUTTER AND EXPLOSIVE ACTUATOR... P-1

ANTI-DERAILMENT SENSOR SYSTEM CONCEPT

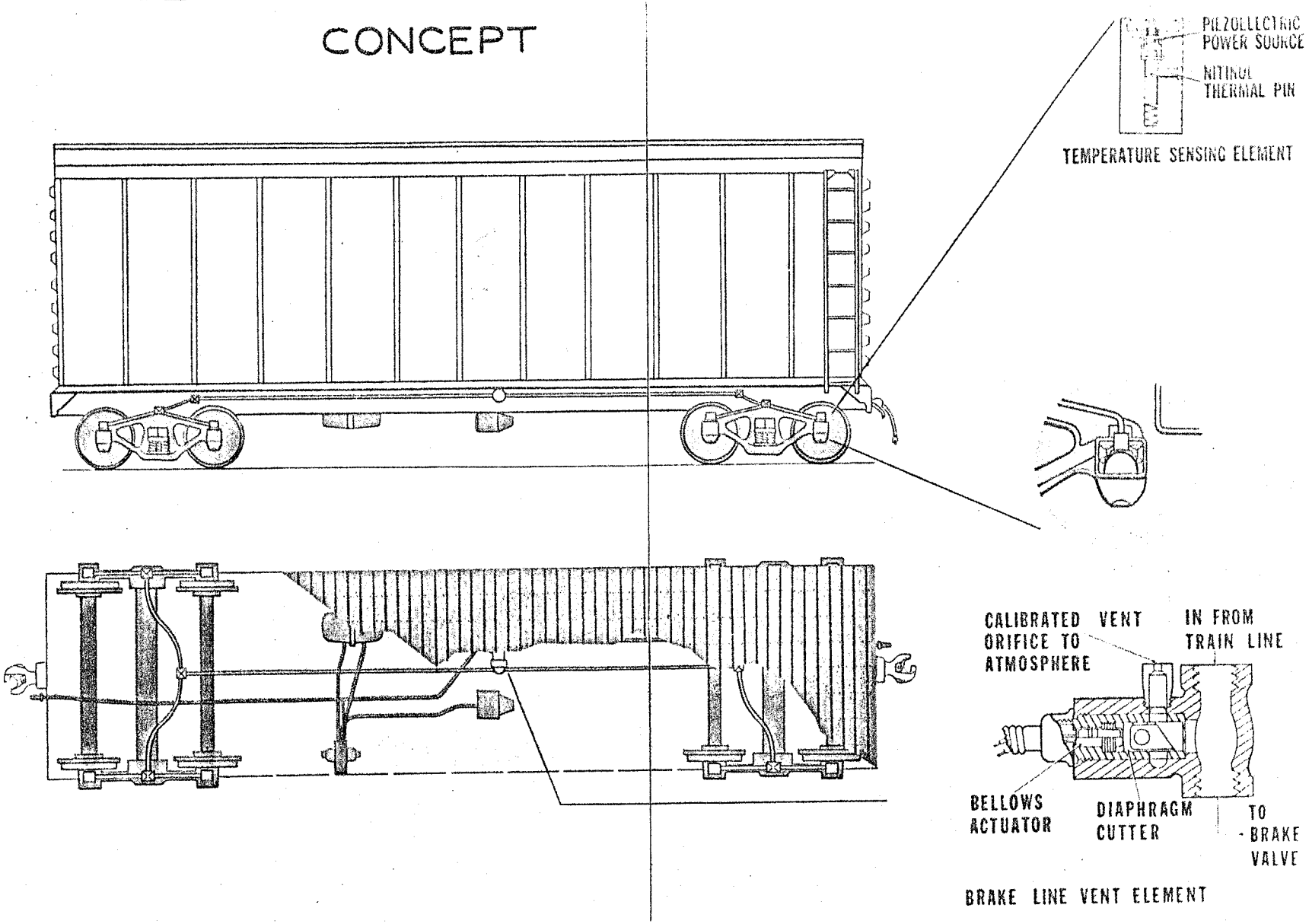

INTRODUCTION

Technology Transfer

The study reported herein has been conducted by the Naval Ordnance Laboratory (NOL) for the Rail Technology Division of the Federal Railroad Administration (FRA), Department of Transportation (DOT) in accordance with the Navy's Technology Transfer Program. Technology Transfer is the process by which NOL technological resources, generated from past and current Department of Defense (DOD) research and development programs, are adapted to urgent civil needs in support of programs in other components of the Government.

The specific purpose of this Phase I study is to determine the engineering and economic feasibility of using specialized military technology to detect incipient or actual derailment and provide for action to prevent or mitigate resulting damage. Since the mission areas of NOL are primarily associated with the expendable, relatively high-production portions of weapon systems which must operate automatically after or while undergoing extreme environmental conditions of shock, vibration, temperature and exposure, the study has been limited essentially to on-train systems.

STATEMENT OF PROBLEM

Principal Causes and Frequencies of Derailment

Table 1 gives the salient accident statistics from reference (a) for the calendar year 1970 which apply to this study in the sense that some degree of prevention or damage mitigation is conceptually possible.

Of the 5602 total derailments, approximately half (2827) were due to defects or failures of equipment or roadway and involved

TABLE 1. 1970 ACCIDENT STATISTICS

TOTAL DERAILMENTS	5602
DERAILMENTS IN ROAD FREIGHT SERVICE FROM EQUIPMENT OR ROADWAY	2827
DERAILMENTS FROM HOTBOXES	409
DERAILMENTS FROM CAR ROCK-OFF	70
DAMAGE TO RAILROAD PROPERTY FROM HOTBOX DERAILMENTS	$15,100,000
EST. TOTAL DAMAGE FROM HOTBOX DERAILMENTS	$45-75,000,000

road freight trains. These were attributed to some 83 different classification codes in the case of equipment defects or failures and 55 different codes covering way and structures defects or improper maintenance.

Equipment-caused derailment sources break down into the following major categories:

Code Series	Cause	Number of Derailments	Number of Codes Represented
2100	Locomotive components	7	3
2200	Truck structure and components	283	17
2300	Wheels and axles	745	15
2400,2500	Air and hand brake components	147	16
2600	Couplers and draft gear	288	19
2700,2800	Car structure and other components	134	13

By far the largest single category was Code 2319 (journal broken - overheating), which caused 409 derailments. Failures of almost every other type of car part caused some derailments but no individual item except Code 2314--worn wheel flanges (132)--caused more than 80 derailments.

Defects in or improper maintenance of way and structures accounted for 2394 derailments, 944 attributable to broken rails or joints, 451 to frogs and switches, and about 625 to poor line, surface, gage or support of track.

In addition to the above derailments attributable to single defects, and to miscellaneous "people-related" causes such as rail-highway grade crossing accidents, vandalism and improper car loading, 154 were caused by various combinations of equipment and roadway defects. Another 332 derailments were attributed to a variety of other ascertained causes, of which two occurred with significant frequency:

Code 4601	Rocking or swaying of car	70
Code 4606	Slack action, not otherwise classified	105

Derailment Costs

Derailments caused $101,228,437 in direct damage to railroad property in 1970, for an overall average of $18,000 per accident. FRA Bureau of Railroad Safety personnel state that estimates of total costs for train* accidents, including damage to lading, private property, casualty costs, cost of delays, wreck clearance, rerouting, etc., which must ultimately be borne by the railroad company, range from 3.5 to 5.2 times the reportable direct damage.

In general, derailments attributable to negligence of employees are much less costly (average reportable cost $8,000) than those which are associated with defects in equipment ($22,000) or in roadway/maintenance ($16,000). In particular, a Bureau study of overheated journal bearing ("hotbox") derailments indicated an average reportable cost of $38,000 per accident, presumably because they characteristically occur at road speeds.

Costs associated with casualties to persons, however, are a relatively minor factor; in 1970, total on- and off-duty employee casualties in derailments (excluding only derailments caused by rail-highway crossing accidents) were 6 killed, 141 injured.

General Constraints on Solution

Within the above frequency, nature and cost framework, certain types of derailment emerge as prime candidates for study, and many others must be eliminated.

*Train accidents are defined as accidents, with or without casualties, arising in connection with the operation or movement of trains, locomotives or cars, that result in damage to railroad equipment, track or roadbed amounting to more than $750.

In concept, the mechanical condition of any component on subsystem of rolling stock or roadway can be monitored, continuously or periodically, by measuring some parameter with some transducer and automatically initiating action in the event it exceeds a predetermined limit. This can only be done at some cost, with some degree of reliability, with some probability of averting an accident, and with some probability of generating false alarms, which in turn will involve certain costs. As the design, manufacture, quality control and maintenance standards for railroad equipment components have matured, failure rates have been reduced by analyzing common failure modes and taking appropriate action. Where the remaining failure rate is still costly, frequent inspection, fail-safe design (such as the automatic air brake with respect to break-in-two's) or automatic monitoring must be considered.

The current study represents in effect a re-examination of the residual hazards of a mature technology to see if these aspects which have so far been resistant to a completely satisfactory solution may not become amenable to profitable monitoring if a significant decrease in monitoring cost can be achieved by applying technology developed in a different technical field. As a check of intuitive feeling for those areas most likely to benefit, an elementary cost analysis for the major categories of components causing derailment has been made and is presented in Appendix A. The results are summarized below. Because of the many assumptions involved, results have been rounded to one significant figure.

TABLE 2. ANNUAL DERAILMENT COST PER $1000 INVESTMENT

Rock-off-susceptible freight car suspensions	$100
Journal bearing assemblies	30
Couplers and draft gear	20
Wheels	10
Air and hand-brake systems	10
Truck structure and suspension components	10
Track structure (rail, ties, fastenings, turnouts, ballast)	6
Axles	2
Freight car body structure and appurtenances	0.5
Road locomotives - power plant and structure	0.1

Applicability to Freight Car Fleet - Since the ratio of freight-train to passenger-train derailments was 60 to 1 for the year 1970, only systems generally applicable to the freight car fleet were considered. For the purpose of evaluating costs and other considerations, the following characteristics were used:

TABLE 3. FREIGHT CAR FLEET OPERATING CHARACTERISTICS

Number of cars (railroad and private owner) - 1,800,000

Type - Eight wheel

Capacity (nominal) - 50, 70, 100, 125 ton (average, 70 ton)

Wheels - Cast or wrought steel

Brake system - AB and ABD

Journal bearings - Roller*

Suspension - Coil spring, 2-1/2, 3-1/16 or 3-11/16 travel, with approved snubbers

Car length - 30 to 89 feet

Truck centers - 23 to 72 feet

Truck wheelbase - 5 feet 6 inches to 5 feet 10 inches

Wheel diameters - 28, 33, 36 inches

Annual fleet mileage - 30×10^9 car miles

Annual mileage/car - 5,000 to 150,000 miles

Average train length - 70 cars

Maximum train length - 250 cars

Average running speed - 30 mph**

Maximum speed - 80 mph

Interchange - Unrestricted

Rail - Welded or jointed (39 feet, staggered)

---

*At the time of the study, approximately 40% of the fleet was equipped with roller bearings and the remainder with friction bearings with AAR-approved journal lubricators of various types. In view of the impending (c. 1974) elimination of friction bearings in interchange service, all designs were based on roller bearings.

**Average train speed including all delays between terminals is 21 mph.

On the basis of the above considerations, the typical car would be in actual motion approximately 800 hours per year.

Maintenance Practices - In evaluating conceptual hardware, it was considered highly desirable to employ only components which could be expected to serve reliably without inspection, test or replacement for a period equal to some existing maintenance interval:

Roller-bearing journal lubrication	36 months
Air brake clean, oil, test and stencil	48 months
Major car body repairs (typical)	10 years
Car life, or complete rebuilding	20 years

Secondary Hazards - Components and systems considered must not generate hazards of their own which represent, potentially or actually, a significant fraction of those they are intended to prevent.

The question of an acceptable false-alarm rate is discussed on p.99 below in connection with discussion of the "Primary Output" function.

The system must not "tie up the railroad" when it actuates, beyond the delay associated with the condition it detects, and should not require any unique tool, equipment or skill not already available on the spot.

Other hazards which any device must avoid and which have been fully considered include:

Ignition of explosive vapor in wreck situations

Missile hazard to inspection and shop forces

Hazard to non-trespassers and trespassers tampering with devices.

Another important consideration is that any monitoring system avoid as well "the appearance of evil"--that is, that any characteristics which have the reputation of hazard (such as high voltages or explosive components) be demonstrably self-contained or otherwise

safe to the extent that they do not involve unconventional precautions in use or maintenance which would tend to create resistance to system use.

Phase-in Considerations - While "unit train" or captive operations in which blocks of freight cars travel only over certain routes are expected to become a more significant part of the total railroad operation in the United States, any system which is applicable to individual cars in unrestricted interchange and provides some immediate benefit is obviously a much more attractive and practical proposition. Therefore, these categories are used in weighing system worth:

Category A - Applicable to individual car; usable for unrestricted interchange without special identification, instruction or replacement parts; provides hazard reduction proportional to number active in fleet.

Category B - Applicable to individual car; usable for unrestricted interchange, with identification, some instruction of railroad personnel and stocking of minor parts; provides benefits as in A.

Category C - Applicable to individual cars, which remain usable for interchange as in A or B, but benefits obtained only where auxiliary equipment on locomotive or at wayside locations is provided.

Category D - Applicable and provides benefits only when installed on a system basis; cars remain usable for interchange or use in non-equipped territory if manual cut-out is provided and used.

Net Return on Investment Criteria - Elimination of derailments has intangible worth beyond the direct costs and hazards to the transportation company, its employees, shippers and on-line communities, particularly in connection with the movement of hazardous commodities. However, for this study, only those cost

savings which might accrue to the railroad, directly or indirectly through reduction in damage claims, have been considered in evaluating conceptual schemes. Return on investment after incremental operating costs is the criterion used.

For the purpose of estimating hardware costs on a production basis, it has been assumed that fleet-wide installation would be made at a rate which would achieve the full benefits of high-volume manufacture and systematized installation procedures.

STUDY MATRIX

Priority of Detection Methods

Table 4 combines the derailment/investment cost ratio data of Table 2 for the principal derailment causes with conceptual methods for detection and their prognosis for success to permit a qualitative evaluation of their potential usefulness.

One item, hotbox detection, stands out as prospectively valuable and definitely feasible in the sense that the action taken upon receipt of a warning will forestall the derailment in essentially all cases.

Incipient resonant rock-off detection attacks a relatively expensive problem but the effectiveness of action which can be taken is not so clear.

Other items involve lesser potential value or greater elements of question as to practicability.

Detection of Local Derailment

The final item in Table 4 addresses a summation of derailments from all causes (representing some $100,000,000 in total direct costs) but only with the prospect of reducing the damage. In a certain proportion of cases, initial local derailment (of the trailing axle

TABLE 4. QUALITATIVE EVALUATION OF ANTI-DERAILMENT SENSORS

Derailment Cause		Derailment/ Investment Cost Ratio (Table 2)	Methods of Detection	Probability of Detection Prior to Derailment	Action upon Detection	Probable Effectiveness of Action in Mitigating Damage
Resonant Rock-off (of Susceptible Car)		100	Abnormal Suspension Motion	Good	Apply Brakes	To be Determined
Journal Bearing Failure		25	Abnormal Vibration	Unknown	Stop Train	High
			Temperature	Excellent		
Couplers and Draft Gear		10	Abnormal Position or Forces on Parts	Questionable	Stop Train	Medium to High
Brake Gear	Stuck Brakes	10	Temperature	Good	Stop Train	Medium to High
	Gear Adrift		Position of Parts	Highly Questionable		
Wheels	Soundness	10	Abnormal Vibration	Questionable	Stop Train	High
	Contour		Feeler Elements	Good		

TABLE 4. QUALITATIVE EVALUATION OF ANTI-DERAILMENT SENSORS (CONTINUED)

Derailment Cause	Derailment/ Investment Cost Ratio (Table 2)	Methods of Detection	Probability of Detection Prior to Derailment	Action upon Detection	Probable Effectiveness of Action in Mitigating Damage
Bad Track Alignment/ Structure	6	Abnormal Motion (in Test Car)	Good	Improve Maintenance	High
Local Derailment (For Any Cause)	Not Applic-able	Abnormal Suspension Motion or Impact	Good (Post Derailment)	Apply Brakes	Depends upon Circumstances

of one truck) will take place and the train will proceed some distance with little further disturbance and with no one aware of the derailment until some obstruction or further damage to the derailed equipment leads to a general derailment, the magnitude of which is most directly related to train speed at the time.

The most likely obstructions triggering the general derailment are turnouts or highway grade crossings. Since both of these are more common in villages or other developed areas, there appears to be a disproportionate tendency for major pile-ups (of the type that often involve explosions, fires or release of hazardous materials) to occur in populated areas. It has even been suggested that dummy turnouts to cause any such pile-up to occur before reaching a developed area might be worthwhile.

The number of such two-stage major derailments is not readily determined, since the detailed FRA investigations and reports of individual accidents cover only the small proportion* of derailments which result in major casualties to personnel. Examination of a few hundred reports in the 1965-70 era turned up accidents in which trains traveled a few hundred to as much as 10,500 feet after the initial derailment before a general derailment ensued, but gave little indication of the proportion of derailments in which an effective local derailment sensor could have significantly reduced damage. If as few as 2 to 5% (50 to 125 per year) of the road freight derailments should be in this category, however, the total potential for saving would be in the $2 to 10 million per year range, and this failure mode was included in the study.

---

*Cross-checking derailment and casualty statistics for 1970 indicates that no more than 60 derailments due to equipment or roadway failures or defects resulted in casualties. This would represent approximately 2% of such derailments.

SYSTEM STUDY MATRIX

On the basis of the above considerations, the matrix of Figure 1 was established to guide this Phase I study of feasibility. Those failure mode/detection mechanism combinations judged most amenable to worthwhile monitoring lead into an array of vertical columns of alternative approaches to accomplishing those functions which in series constitute a usefully complete system.

This section of the study report considers available mechanizations of each function in terms of input-output requirements in the context of its environment in unrestricted railroad interchange freight service.

Ambient Conditions - General

For the extended service life envisioned, all system components must possess an inherent ruggedness meeting the environment to which they will be exposed with a considerable margin. Except for items such as radio receivers used in crew compartments, components must be capable of design to meet the following general ambient conditions. Special environments such as tampering, car loading and unloading, and maintenance procedures on related components will be discussed in connection with particular component locations.

Temperature - Military Standard (MIL-STD) temperature extremes of -65 to +160°F are assumed for both survival and operability. The upper extreme covers the effects of maximum ambient (shade) temperature plus exposure to maximum direct solar radiation.

Resistance to temperature-shock between these limits is also considered important.

Shock and Vibration - MIL-STD transportation shock and vibration test schedules are used as a basis for estimating adequacy of

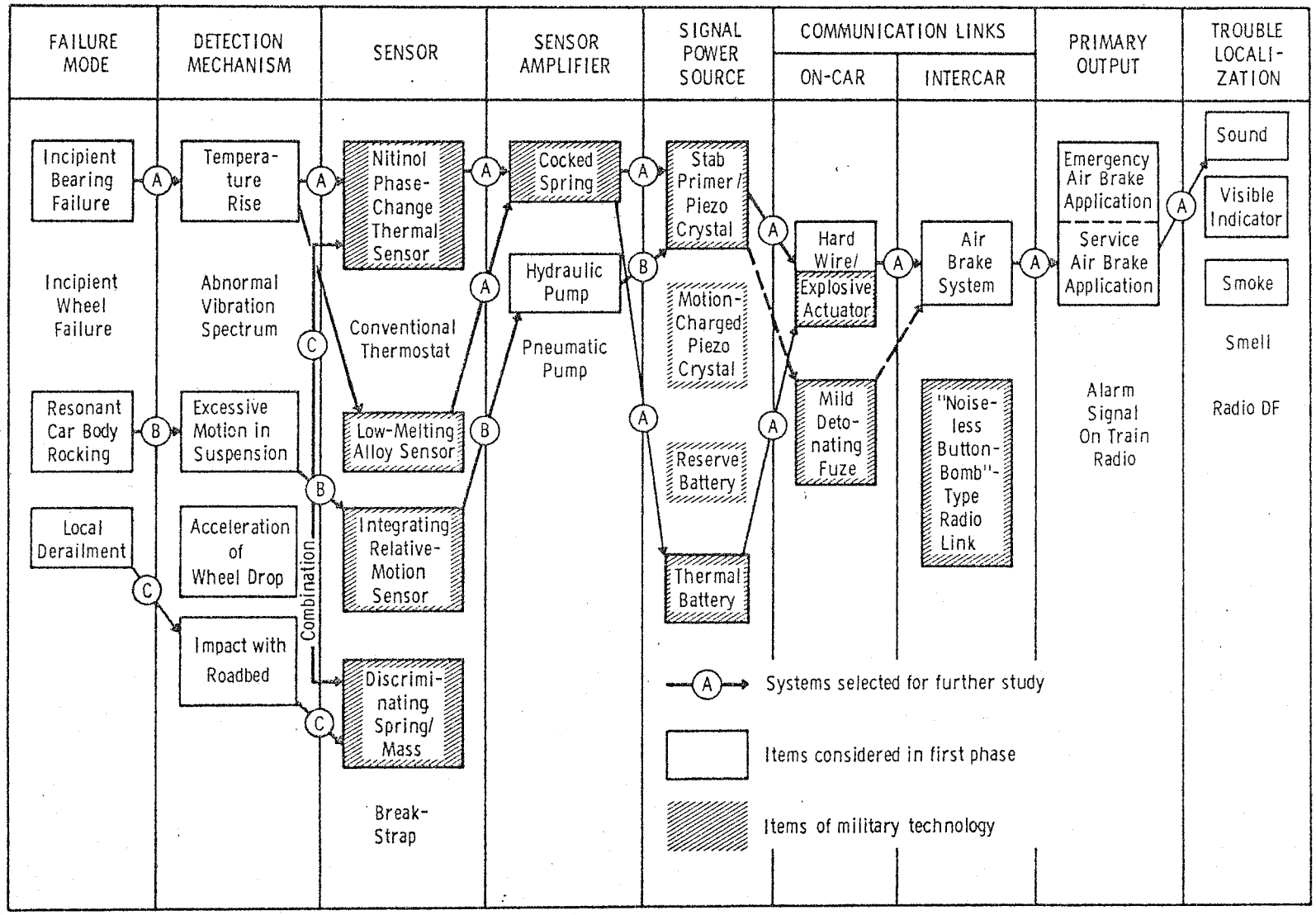

FIGURE 1. ANTI-DERAILMENT SENSOR STUDY MATRIX

components for locations above the truck suspension, i.e., for attachment to the truck bolster and all locations on the car body.

For components to be mounted on "unsprung" masses (wheels, axles, journal bearings and housings, equalizers and truck sideframes), shock and vibration conditions are much more severe; Appendix B describes the random vibration test schedules developed for this program and their rationale. Data from certain MIL-STD rough handling safety tests which represent oversimulations of "normal" handling shocks (jolt, jumble and 40-foot drop) have been used to judge component survivability where applicable, as discussed in connection with specific components.

FAILURE MODES AND DETECTION MECHANISMS

Incipient Journal Bearing Failure

Description - Bearing failures resulting in axle-end fracture from its overheating and consequent dropping of the truck sideframe to the roadway have been a most prevalent source of major accident ever since the fixed-gauge, flanged wheel running on the smooth rail head supplanted the flange-on-the-rail plateway in the early nineteenth century. However, the inherent smell, smoke and, finally, flame associated with failure of the hydrodynamically-lubricated "plain" journal bearing and its waste or lubricator-pad oil-distributing scheme usually provide considerable warning time between initial heating above the normal operating range and axle failure.

Incidence of Failures - Watching (and sniffing) for hotboxes from caboose, locomotive, passing trains, or manned wayside vantage points was at least potentially effective in detecting incipient failure in most cases, as was feeling journal box temperature at frequent intermediate-terminal inspection points.

Higher speeds, heavier loads, extended runs and other factors caused a serious deterioration in bearing performance in the early post-World War II era; in some periods, set outs for bearing failures between terminals reached a rate of one per 150,000 car miles (as many as 200,000 per year). This became an intolerable source of expense from the standpoint of train delays, although only about one hotbox in 400 progressed undetected to the point where derailment resulted.

Between 1957 and 1962 the rate of set outs for bearing failures was reduced by more than an order of magnitude, primarily by the mandatory (1962) elimination of loose waste packing in favor of lubricator pad devices. At the same time, the number of roller

bearings in freight service began to become significant, and these have demonstrated a failure rate of about one per 10,000,000 car miles. Roller bearings became mandatory for new car construction in 1968 and the 1971 composition of the freight car fleet was 38% roller bearing. Elimination of the plain bearing is expected by about 1974. Conversion to the more expensive bearings is justified by reduction in lubrication, repacking and inspection expense, improved high-speed performance and other factors.

Accident Rates - The reduction in bearing failures, however, has not brought a corresponding decrease in hotbox-caused derailments because the rate of derailments per detected hotbox has increased to approximately one in 50 (1970). The resulting hotbox derailment total has thus remained relatively constant. The decreased rate of detection may be attributed to:

a. More rapid progression from initiation of bearing failure to catastrophic assembly failure characteristic of roller bearings.

b. Less detectable early signs of bearing failure than with lubricator pads.*

c. Reduced frequency of inspection with a smaller number of employees and fewer trains per unit of traffic, and reduced number of manned wayside points from which inspections may be made.

Automatic Wayside Detection Methods - Automatic wayside infrared detection stations have been installed at several hundred locations. These units, capable of scanning each bearing on a passing train and reporting/recording its temperature, have been developed to a point of excellent effectiveness. However, at a cost of approximately

*Heat-triggered smoke/smell cartridge indicators for roller bearing installations are available but not widely used.

$50,000 each, plus hard wire or microwave radio connections to automatic signals or manned monitoring points, they have not generally been installed on low-traffic-density lines or at close enough intervals on mainlines to detect all hotboxes before catastrophic failure can develop.

Bearing Failure Rate Prognosis - The cost of bearing failures has led to continued study of equipment maintenance and design factors influencing their frequency of occurrence by the FRA Bureau of Safety and the AAR. Sufficient numbers of roller bearings have reached the end of their initial service life to permit assessing the effectiveness of various inspection, remanufacturing and requalifying standards and practices on failure rates over the total bearing lifetime. It is the opinion of Bureau of Safety engineers that outlawing or upgrading of certain current roller bearing refurbishment practices which are now known to account for many failures may be expected to reduce bearing-caused derailments in an all-roller-bearing fleet to the order of 100 per year from the recent rate of 400 to 600 per year.

Detection Mechanisms -

Temperature Rise - Actual axle failure must occur from heating to a temperature where the steel is significantly weakened, since nominal stress levels are low. The energy input available from the maximum torque input from one pair of wheels to a seized bearing assembly is sufficient to raise the axle-end steel to 1000°F in less than one minute. It is not likely that this concentrated an input will occur in an actual assembly, but it is apparent that failure can occur in a matter of a very few miles or minutes of travel. Continuous, automatic monitoring of each bearing may be expected to provide virtually 100% protection from this mode of failure, provided the thermal path to the sensor is as short as

that from the bearing to the axle and there is no significant time lag in the sensor.

Abnormal Vibration Spectrum - No recorded vibration spectra from roller bearing assemblies approaching failure were found, nor were prevalent failure modes defined in detail. Reference (b), however, provides power spectral density (PSD) and accleration data for both normal and severely (6 inches) slid-flat wheels, measured on the truck sideframe adjacent to the journal bearing adapter at speeds up to 60 mph and over track with controlled vertical and horizontal irregularities typical of very bad track. Figure 2 shows vertical PSD distribution with normal and with flat wheels, while Figure 3 shows similar lateral spectra for the most severe conditions measured, adapted from this report.

The predominant vertical vibration power is at frequencies corresponding to natural frequencies of the wheel on the rail (6 Hz) and of the wheel on the track structure (70 Hz). In the horizontal direction, the predominant power is above 300 Hz and is associated with wheel vibration frequencies. These frequencies are independent of train speed but their amplitude increases exponentially with speed and with track or wheel irregularities.

If it is assumed that roller bearings in this service, initially at least, fail in the normal manner by surface fatigue of the inner race, it is probable that relatively severe vibration would provide an early indication of failure. The expected frequency would be a multiple of the rotation frequency by a factor roughly equal to half the number of rollers. This would result in fundamental frequencies as follows (for 33-inch wheels):

mph	Rotational Frequencies (Hz)	Vibrational Frequencies (Hz)
10	1.7	20 - 22
30	5.1	60 - 65
60	10.2	120 - 135

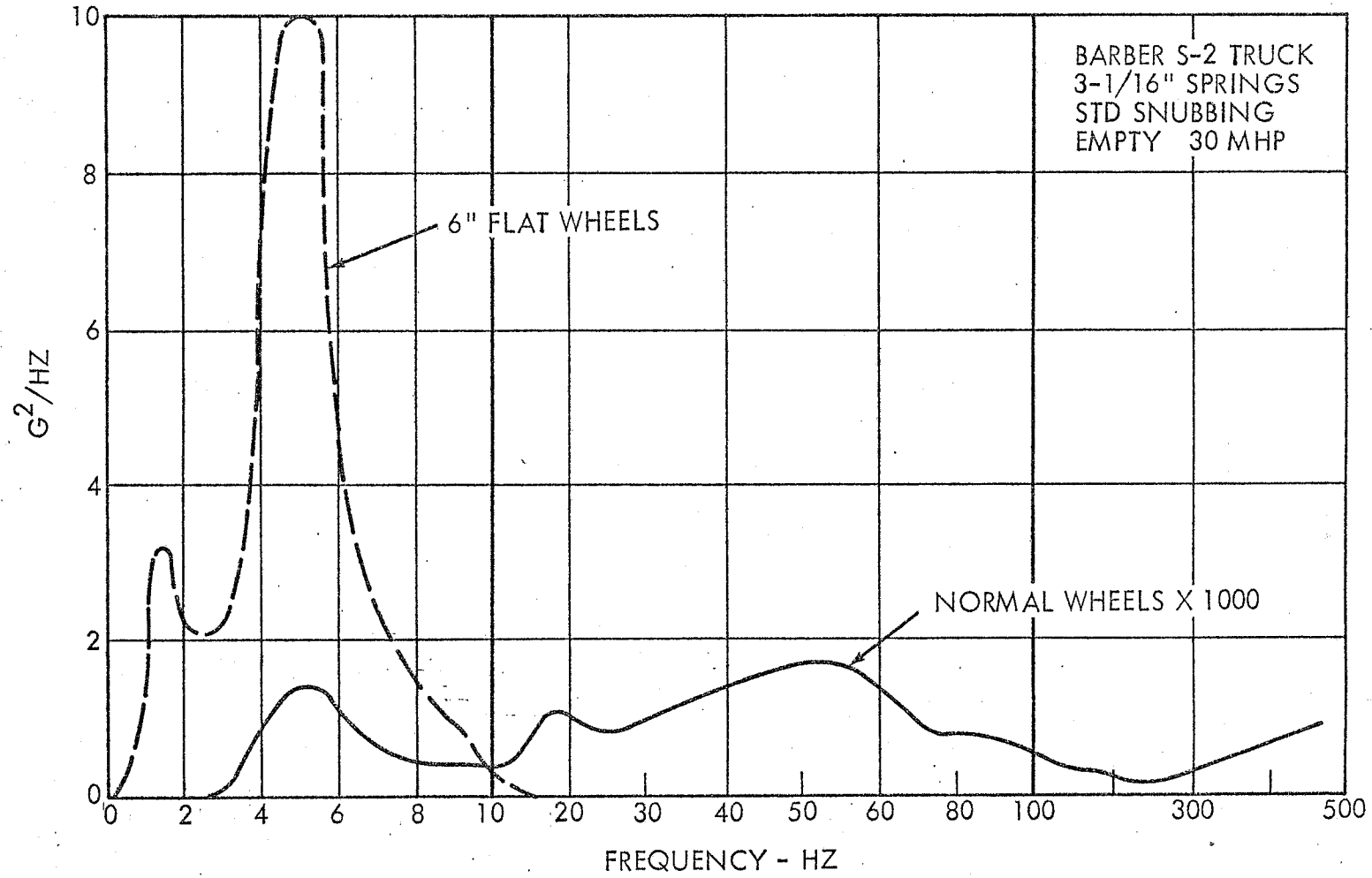

FIGURE 2. TRUCK VERTICAL ACCELERATIONS - POWER SPECTRAL DENSITY (FROM REFERENCE-)

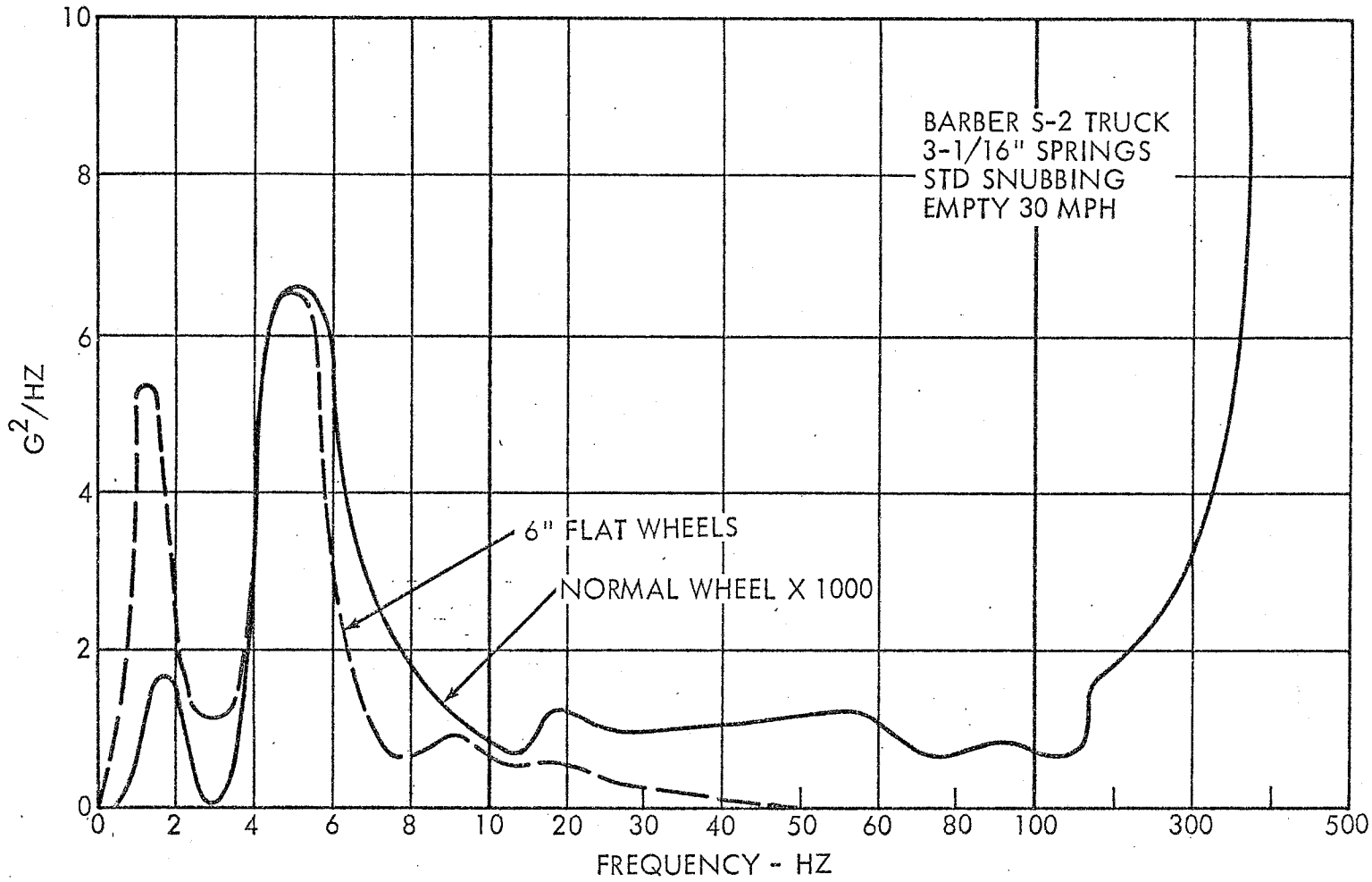

FIGURE 3. TRUCK LATERAL ACCELERATIONS - POWER SPECTRAL DENSITY

It is thus possible to conclude that there might be a range of frequencies at which high truck acceleration would be a reliable indication of roller bearing damage, and that vibration monitoring could serve as an earlier-stage warning of incipient failure than could bearing temperature. These abnormal vibrations could be directly distinguished from normal truck vibrations only above those speeds where they correspond to track/rail/wheel frequencies. In view of the extensive measurement program that would be necessary to validate this possibility and of the monitoring problems discussed in the section of this report covering sensor concepts, this detection mechanism has not been considered further.

Incipient Wheel Failure

Of approximately 300 derailments attributable to wheel failures in 1970, two-thirds represented abnormalities in wheel contour (flange worn) or position (wheel loose on axle) which could conceivably be detected by some on-train configuration-measuring system but which characteristically develop relatively slowly.

The remaining 100 derailments were attributed to fractures of various types, mostly categorized as "other." Many of these presumably would change the vibrational characteristics of the wheel as they developed progressively and therefore could theoretically be monitored, considering the prominence of wheel frequencies in the lateral vibration spectrum shown in Figure 3.

Neither of the above possibilities is so easily monitored by any obvious on-train detection mechanism as to overcome the inherent cost advantage of having a single (stationary) sensor monitor thousands of passing wheels. Therefore no further consideration was given to this problem.

Resonant Car-Body Rocking

Description - Post-World War II increases in freight car capacity from 50 and 70 tons to the 100- and 125-ton range have been coupled with a desire to reduce tare weights by keeping car length to a minimum. As a result, there are a significant number of cars which have a relatively high center of gravity and a truck center distance close to the 39-foot standard rail joint spacing. When operated near the resulting resonant speed of 18 to 20 mph on curved track, such cars may derail.

Incidence - In 1970, 70 rock-off derailments were reported. While the low speed at which they typically occur would indicate that their cost is probably equal to or less than that for equipment-caused derailments as a class ($22,000 average direct cost), total cost from this cause was probably in the range of $5,000,000 per year.

Unlike other causes, this problem is largely confined to a segment of the freight car fleet--perhaps 50,000 cars at the most--and the higher cost per affected car warrants greater consideration for a remedy.

Application of special friction damping devices (stabilizers or snubbers), either between the truck sideframe and the car body or the sideframe and bolster, has been effective in reducing resonant rock-off in susceptible cars; to a considerable extent, a sensor system would represent insurance against failure of the special snubbers rather than a primary fix.

Motion during Derailment - Resonant rock-off has been studied rather extensively by railroads and suppliers, both analytically and experimentally. Reference (c) contains a mathematical resonant rock-off model which has been validated by comparison with some rock-off test-track results. Typical build up of resonant motion

with stabilizer not operating is shown in Figure 4. The frequency in the rocking mode (about 0.6 Hz) is much lower than the corresponding vertical, symmetrical mode (2.2 Hz for a loaded car with 3-1/16 inch spring travel); as a result, a truck-suspension damping rate appropriate for control of vertical motion allows rocking amplitude to reach the wheel-lift point in about six cycles or ten seconds in this case.

Car Body versus Truck Bolster Motion - As the resonant motion increases, the car body may begin to rock independently of the truck bolster. The car body will then pivot about the edge of the center plate, or about the side bearing after side-bearing clearance is used up. Since all car body forces are transmitted to the wheels via the truck suspension, however, it is this element that determines when wheel lift occurs.

The critical point in incipient resonant rock-off occurs when the truck springs on the "high side" of the car become completely unloaded. There is then no longer any force holding down the unsprung masses (wheels, sideframe, half of the axle weight) except their own weight. To determine the approximate sequence of events at the point, the analysis of Appendix C was made.

Motion at Lift-Off - The leverage of the high load on the low side of the truck acting on the overhanging journals is shown to be sufficient to lift the wheels the height of the wheel flange in a time much shorter than the period of the resonant rocking motion:

	Loaded Car	Empty Car
Period of oscillation (rocking mode)	1.6 sec	0.9 sec
Time for one inch wheel lift	0.038 sec	0.085 sec

If the car is on curved track, at the time of actual wheel lift, derailment is therefore inevitable. It may be concluded that any effective anti-derailment action will have to be initiated prior to

Measured motion at 17.03 mph
Stabilizer not operating

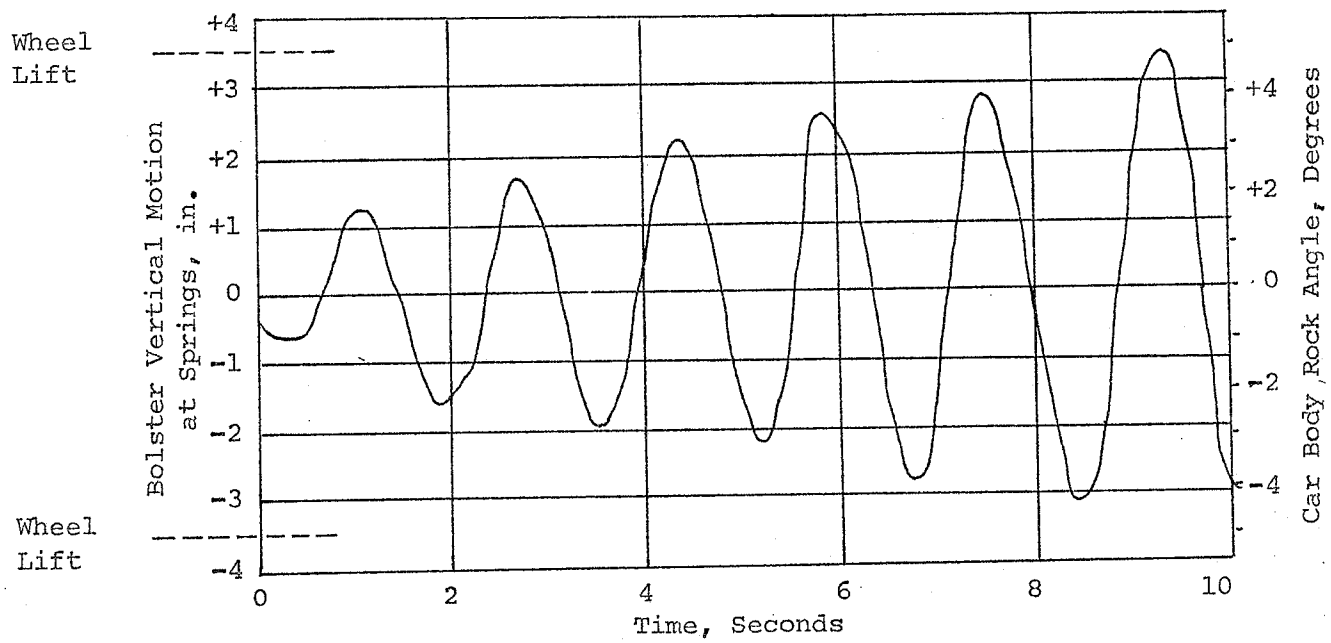

From reference (c); truck center spacing = 39 feet

FIGURE 4. RESONANT CAR BODY ROCKING MOTION

complete unloading of the springs. Otherwise, the flange will be atop the rail long before the car body motion again puts load on the wheel.

Detectability - From the resonant action within the truck suspension, it appears that only a few seconds warning is available before rock-off. Methods for detecting this situation are discussed in the Sensor Section of this report. Since the positive action that could be taken in this time frame must be completely automatic, a (service) brake application initiated at the car in question or triggering of some other emergency auxiliary damping device on its suspension are the only system primary outputs that appear possibly effective. The latter does not appear economically promising vis a vis applying a more reliable (e.g., multi-element redundant) stabilization system in the first place.

Response to Brake Application - Assuming a brake application, the mass of the car body will press the truck bolsters against the sideframes as the braking force decelerates the car. This will create friction and dissipate rocking-mode energy at a rate in the order of 2000 ft-lb per cycle*, which happens to equate roughly with the rate of energy build up in a fully-loaded car equivalent to the resonant motion shown in Figure 4. It would thus appear that a brake application might stabilize the situation immediately and then gradually reduce train speed to the point where the resonant condition no longer governs. Much more detailed analysis, including such situations as approaching the resonant speed from above rather than below, would be required to make a definite prediction of success.

*200,000 pound car body weight, 0.05g deceleration, 12 inch travel per cycle (between bolster and sideframe) and 0.20 sliding coefficient of friction = 2000 ft-lb per cycle.

Local Derailment

Description and Incidence - The significance and probable incidence of undetected local derailments which later develop into general pile-ups at a more hazardous location have been discussed above in the section dealing with the priority of detection methods.

Derailments of this type could occur in connection with almost any of the 138 coded classifications of equipment and roadway failures or defects causing derailments in 1970. They could also arise from such forms of employee or non-employee negligence as improperly secured loads or highway vehicles running into side of train and from a variety of causes classed as miscellaneous, including track obstructions.

Motions during Actual Derailment - In the following classes of derailment, roughly lumped into broader groups, one or both axles in an essentially intact truck structure literally "jump the track" under circumstances in which it is possible that existence of the initial derailment will not be immediately apparent to employees.

TABLE 5.

Derailment Cause	No. of Derailments (1970)
Falling or dragging car parts	340
Wheel worn or broken	345
Displaced load	110
Rock-off	70
Slack action in train	105
Track alignment or surface	650
Rail displaced	365
Rail or joint broken	895
Combination of track/car conditions	150
	3030

Wheel-Drop Trajectories - In these derailments, the wheels and axle drop off the rail head, once the flange on one side has passed beyond its outer edge, and accelerate downward until the flange strikes the roadbed. Appendix D contains a dynamic analysis of the vertical motion of a standard 70-ton truck during this free-fall period. Three dynamically different situations may occur:

a. Two-axle derailment - Both wheels on one side of the truck may derail at the same instant. For this to occur, both flanges on one side must travel some distance atop the rail head, crossing it at a rather small angle, so that both go "over the brink" at the same time; once a wheel drops from the rail head, it hits the tie plates in from 30 to 60 milliseconds (3½ to 7 feet at 60 mph). This situation was not specifically analyzed because it must be relatively rare in occurrence and because the completely derailed truck which results is not stable in yaw and is therefore not likely to represent one of the delayed pile-ups whose effects the sensor can be expected to mitigate.

b. One-wheel derailment - One wheel may drop from the rail head and hit the tie plates while its mate and the other axle of the truck remain on the rail. Within tread and rail head widths and track gauge tolerances, either a gauge-side or field-side derailment may occur first. This case is analyzed in Appendix D; a trajectory for the first quarter inch of drop is presented because this is the situation of a wheel dropping into a rough joint, frog flangeway or other irregularity in one rail. It also results in a higher impact velocity than the other situations and is thus important as a limiting case.

c. Two-wheel derailment - In most derailments, the second wheel on the axle must leave the rail head at about the same time as its mate because the typical overlap is less than 3/8 inch. This case is analyzed fully in Appendix D because it results in lower impact velocities and is thus a limiting case in the proposed sensor system. On rail in the 112-lb/yd class, the free drop until impact is about 5 inches for a gauge-side drop and about 6 inches for a field-side drop where the flange is atop the rail head at the start of the drop.

Figure 5 presents the trajectories of the wheel and journal for the two-wheel, single-axle case. Figure 6 summarizes the journal acceleration, velocity and displacement relationships during drop.

The truck and suspension geometry gives the springs (backed by the inertia of the car body) a very significant leverage, driving the wheel, axle and journal downward with an initial accleration of approximately 5g in the case of an empty and 19g for a fully-loaded car. Vertical velocity of the wheel prior to impact upon the roadbed will be about 19 ft/sec for a single-axle drop on a loaded car or 8 ft/sec on an empty (equivalent to free-fall drops of 66 and 13 inches).

Drop Sensing - It is theoretically possible for an integrating accelerometer to sense the velocity change involved in these downward accelerations during actual derailment and probably to differentiate them from low joints, frogs, flat wheels and other "hormal" accelerations and impacts that involve higher accelerations but smaller velocity change. In practice, however, this approach would involve such sensitive devices that acceptable life in the face of the severe vibration environment is not likely, and direct readout in a simple device with the limited operating force available would be a problem.

Impact Sensing - A much more practical event for detecting derailment is impact with the roadbed. As Figure 5 shows, in essentially all cases in a drop onto typical mainline roadbed (21-inch tie spacing), the wheel flange or tread will first hit on one or two tieplates.* This is a reasonably reproducible "target" in hardness and

*On bolted, 39 feet rail-length track, the odds are about one in six that a wheel on an empty car will hit an angle bar or its bolts, and about one in twelve for a loaded car. This is considered in the return-on-investment discussion of the local derailment sensor.

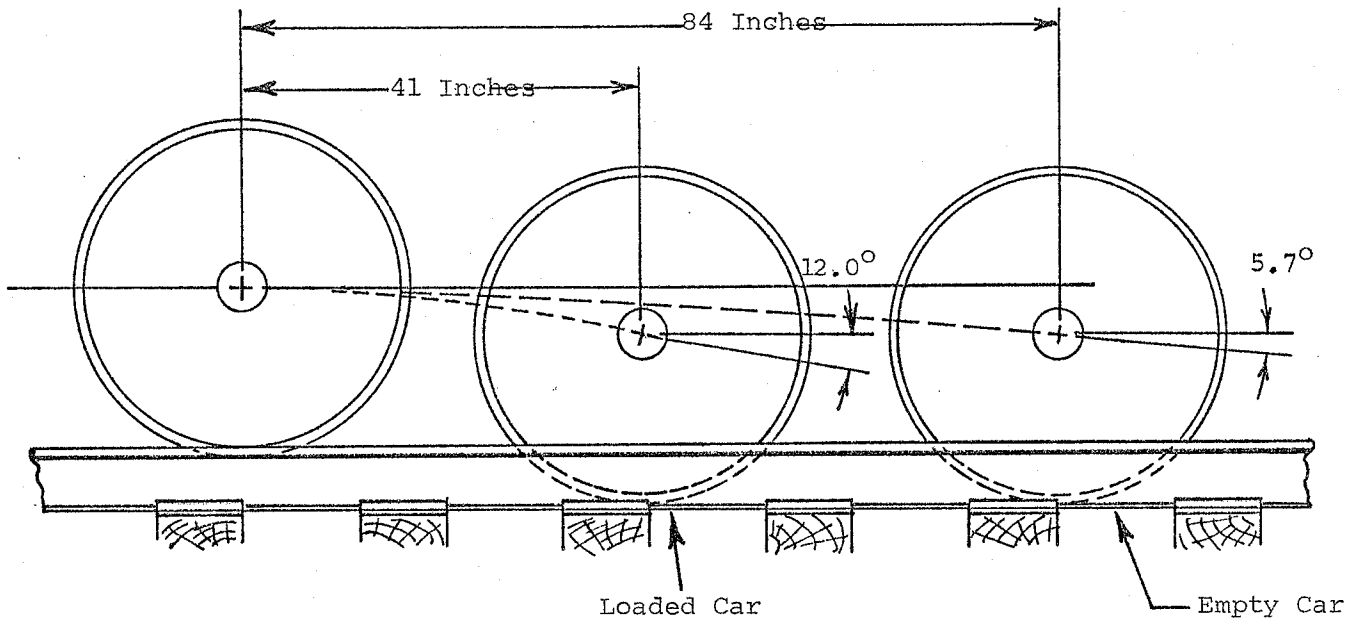

70-ton car, 33-inch wheels, 60 mph, 112-pound rail
Gauge-side, two-wheel drop
Vertical impact velocity: empty car = 8.1 ft/sec
loaded car = 18.7 ft/sec

FIGURE 5. WHEEL TRAJECTORIES IN SINGLE-AXLE DERAILMENT

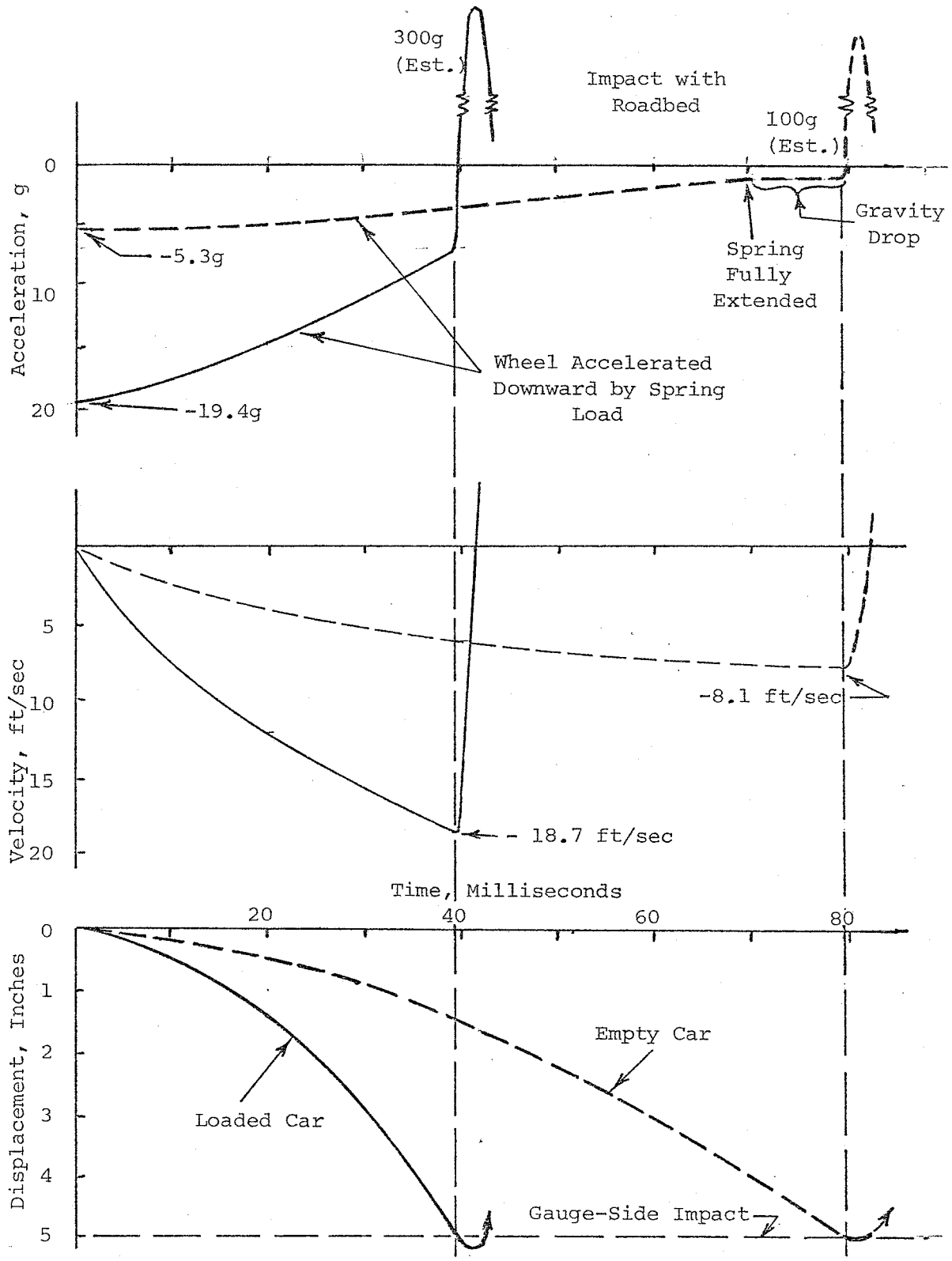

FIGURE 6. DERAILMENT TRAJECTORY - TWO-WHEEL DROP

location, though its effective mass probably varies widely with ballast types and maintenance conditions. Impact parameter estimates have been made on the basis of the analysis of Appendix D, maximum rail head load capacity, and the track frequency estimates and flat-wheel acceleration data of reference (b). This attempt to obtain a first-cut feel for the practicability of separating the derailment "signal" from the "noise" of normal impacts results in the following range of values:

	Empty Car			Loaded Car		
	Peak Acceleration (g)	/	Velocity Change (ft/sec)	Peak Acceleration (g)	/	Velocity Change (ft/sec)
Derailment (two-wheel)	80-150	/	8-12	250-400	/	18-30
¼-inch drop on rail (frog, low joint, etc.)	25-40	/	3-5	50-80	/	6-10
2-inch flat spot*	8-12	/	1-1½	16-25	/	2-3
6-inch flat spot*	30-50	/	3-6	60-100	/	6-12

The signatures are expected to be of roughly half-sine shape and 3 to 5 millisecond duration. The biggest uncertainties in these estimates result from lack of good data on the height of wheel drop which is equivalent to the wheel action in traversing a rough frog or joint and on the coefficient of restitution to be expected in rail and roadbed impacts.

Detectability Discussion - Design concepts and parameters for a practical accelerometer for detecting the impact of derailment are discussed below in report section dealing with sensors.

From the above data and estimates, it appears that the derailment roadbed impact in either a loaded car or an empty can be distinguished fairly reliably from normal service conditions by a sensor which

*See Figure D-5 of Appendix D for equivalence of drop height and length of flat spot. Coefficient of restitution of 100% assumed for upper limit of velocity change.

actuates when appropriate threshold g and velocity-change criteria are both met. A sensor set to low enough limits to actuate upon all empty-car roadbed impacts appears to be marginal with respect to some normal service shock levels when the car is running loaded, however. This is particularly true with respect to excessively large flat spots on the wheels. Since severely slid-flat wheels are also extremely destructive to the track, automatically sensing them when they markedly exceed acceptable limits may well be desirable.

Test Recommendations - The vertical wheel velocity at impact with the roadbed is not directly related to speed. Therefore, most of the data necessary to determine the feasibility of suitable threshold settings for a fixed-setting sensor capable of reliably detecting local derailment in a car while empty or loaded should be obtainable on a test track. By derailing a suitably instrumented car at low speed under controlled conditions as to point of impact and track structure, and by making comparable measurements at frogs, crossings and joints, it should be possible to obtain data sufficient for design and setting of a sensor for further testing and calibration under service conditions over all speed ranges.

SENSORS/SIGNAL GENERATORS/PREAMPLIFIERS

General Requirements

The overall usefulness of a sensor in this service is at least as much a function of its ability to give a directly-usable output signal to the inter-car communication system as it is of its ability to measure the input parameter in question. To avoid redundancy, alternative sensors and their associated signal generators, power sources and signal preamplifiers will be considered together.

Thermal Sensors

For hotbox detection, the thermal sensor should actuate at a value well above ambient bearing operating temperature and the 165°F maximum expected from solar exposure but as soon after incipient bearing failure is manifest as possible. Thermostats in direct contact with the outer bearing races on the DOT research (passenger train) test cars are set at 240 ± 8°F (reference (d)). The New Tokaido Line cars of the Japanese National Railways are reported to be equipped with continuous bearing temperature sensors set for approximately 270°F.

It will be assumed that any thermal sensor which can be made to provide a set temperature of from 200 to 300°F with an accuracy of ±15°F throughout its life is suitable for consideration.

Snap-Action Thermostat - The bimetallic-disk, snap-action thermostat provides reliable electrical contact closure of ample accuracy at low cost. The moving element is sufficiently light with respect to its snap-action energy to resist spurious shock or vibration actuation under unsprung railroad conditions, as is attested by the DOT installation which has been operated at speeds to 150 mph and therefore to shock levels greatly exceeding those in unrestricted freight service.

Power Sources - For freight-train service the principal stumbling block to use of the thermostat is the lack of a continuous source of electrical energy for monitoring its output.

Two ways out were studied--the motion-charged piezo-crystal electric power supply (Figure 7a) and direct initiation by the thermostatic element of an explosive element (Figure 7b).

Motion-Charged Piezo Crystal - Piezo-electric crystals subject to pressure will generate a voltage V equal to:

$$V = d \frac{F}{C_x + C_1}$$

where d is a piezo-electric coefficient characteristic of the crystal material, size, processing and polarization, F is the compressive force and C_x and C_1 are the capacitances of the crystal and any load in parallel with its output surfaces respectively.

For a 0.3-inch diameter by 0.030-inch thick lead zirconate titanate crystal of the type used in the Fuzing System Mk 1 Mod 0 (Appendix I refers) suddenly loaded by 7.5kg in parallel with a 7500pF capacitor will generate approximately 3 volts, a charge of 22.5×10^{-9} coulombs. If the crystal were subjected to 1g vibration at 100 Hz with such a load, the current generated would be 2.25 microamperes. With stacks of such crystals supporting a significant mass, it is conceivable that a voltage supply adequate for monitoring could be developed from normal freight car motions (probably from the lower but more predictable and stable vibrations at some car body location rather than from "unsprung" vibrations at the journal itself). However, since the leakage resistance of the entire circuit would have to be in the multi-megohm range at all times, this scheme is not attractive in comparison with alternatives discussed below.

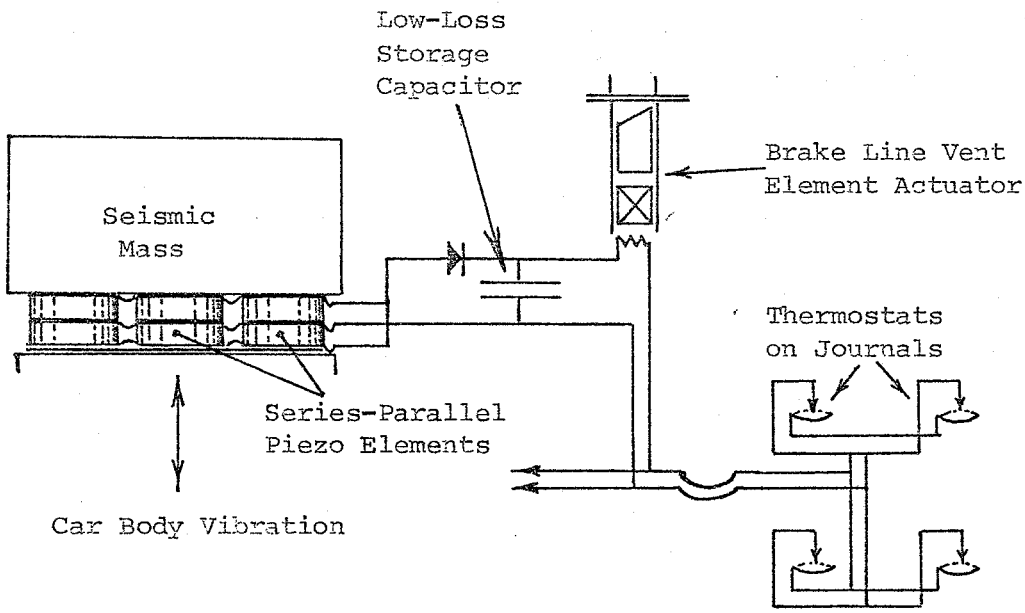

(a) Motion-Charged Piezo-Crystal Power Supply

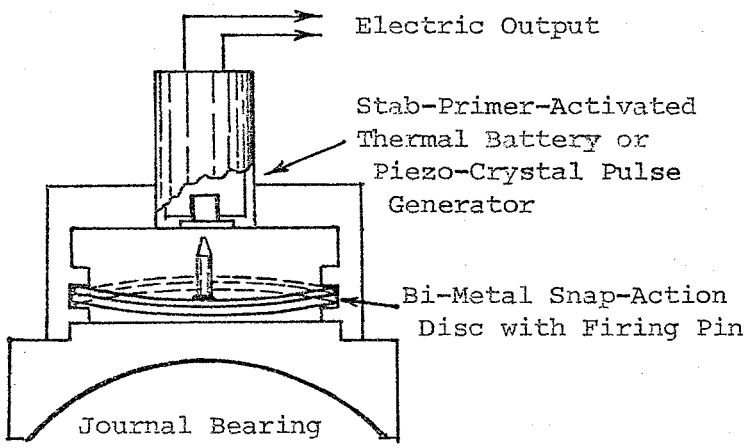

(b) Direct Initiation by Thermostat Element

FIGURE 7. SELF-POWERED THERMOSTAT SENSOR SYSTEMS

Direct Explosive Initiation - A firing pin attached to a snap-action disk is capable of initiating a stab detonator directly, provided sufficient energy is developed to accelerate the firing pin to at least 2 ft/sec and provide approximately one inch-ounce striking energy. Figure 8 is a typical curve of firing pin velocity/drop height versus firing pin weight for a stab detonator, showing the importance of velocity in attaining reliable firing with minimum energy. The output of the detonator can be used to drive an electrical or chemical on-car communication system, as described later.

Energy available from a snap-action device is proportional to the square of the temperature differential over which elastic deformation energy is accumulated. Pin velocity is related to the mechanical (speed) advantage of the particular configuration at its snap-through point. Accumulating energy over as large a temperature differential as the yield stress of the sensor material will allow is not ruled out in a one-shot application such as this, but it increases the manufacturing precision required to attain reasonable operating temperature predictability. When coupled with the requirement for complete insensitivity to repeated shock in the 200g range at temperatures within 60 to 80°F of the operating temperature (which tends to result in light parts with relatively long travel at actuation), the design becomes bulky in comparison to alternatives discussed below.

Low-Melting Alloy Sensors - An alloy element melting at the desired temperature may be used to release stored energy from some convenient source, such as a cocked spring, which in turn can initiate a power source providing an adequate signal level for on-car communication from multiple sensors.

This principle has been used in the Rocket Fuzes Mk 196 Mod 0 and Mk 197 Mod 0 for high-altitude sounding rockets. In these fuzes (which differ only in external contour), aerodynamic heating generates temperatures early in flight which release the firing pin and initiate a pyrotechnic timer. Naval Ordnance Laboratory Technical Report 63-126

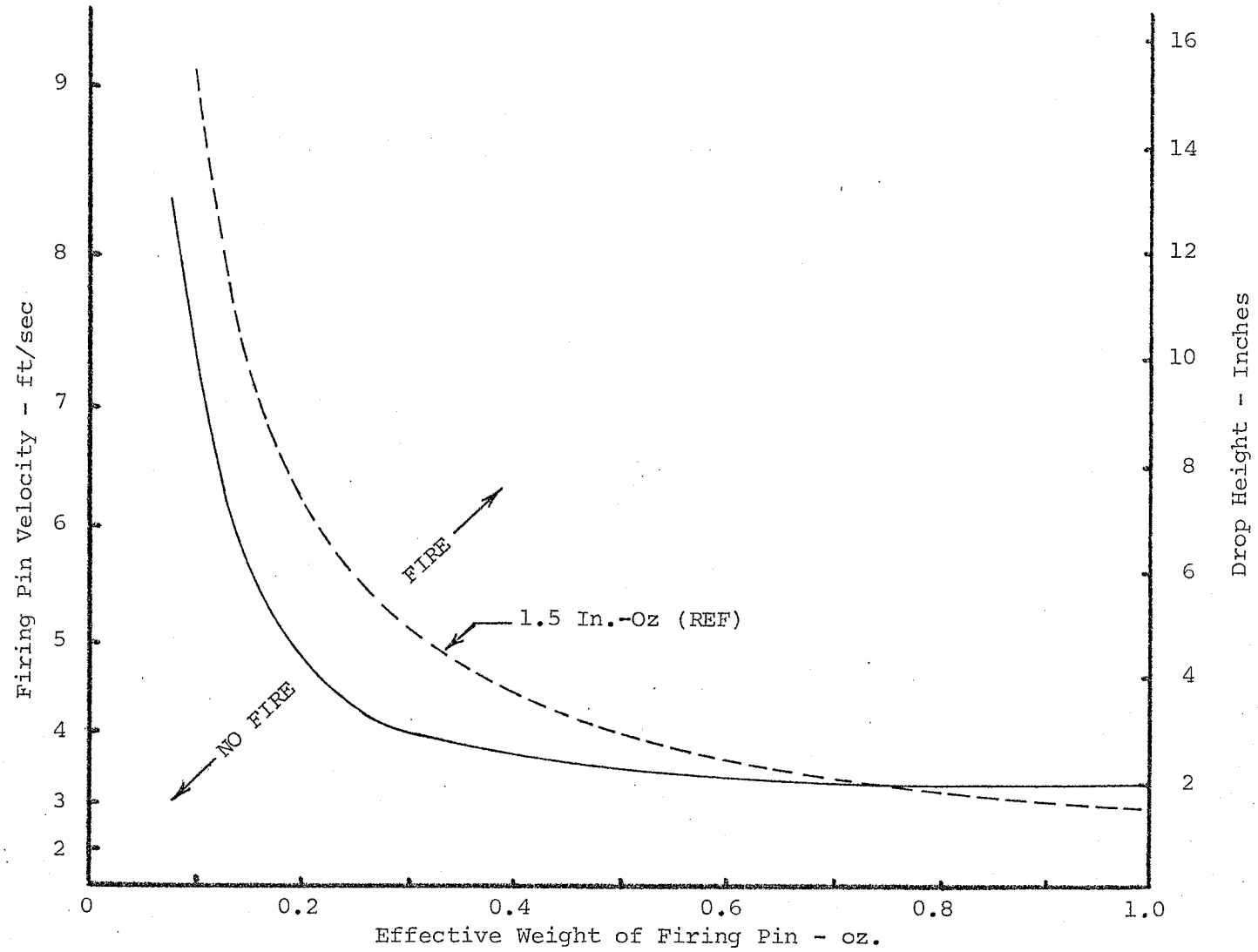

FIGURE 8. STAB PRIMER FIRING ENERGY - TYPICAL

(reference (e)) discusses the design characteristics of these fuzes and their development and evaluation test programs. Military Standard safety tests conducted included the following:

TABLE 6.

	Title	Sample Size
MIL-STD-300	Jolt	3
MIL-STD-301	Jumble	10
MIL-STD-302	Forty-Foot Drop	5
MIL-STD-303	Transportation Vibration	3
MIL-STD-304	Temperature and Humidity (28-day)	2
MIL-STD-306	Salt Spray	2

All samples satisfactorily passed these tests. Details of these test procedures and criteria for passing are given in Appendix E. In the case of the Mk 196/197 units, thermal operability was also satisfactory in all units following these tests, demonstrating ruggedness as well as safety against premature firing-pin release.

Sensor Design - For the anti-derailment sensor program, the thermal sensor design shown in Figure 9 was generated, using the ROCKEYE II (Fuze System Mk 1 Mod 0) stab detonator/piezo-electric power source as the output element. These components are discussed in the report section on the phase-change-alloy thermal sensor below, as are firing-pin energy characteristics.

The 1.12 gm hardened-steel firing pin is restrained by three steel balls which in turn are restrained by a split steel ball-retainer sleeve. When the thermal ring melts, the liquid is free to flow into voids provided in the housing and release the firing pin. The steel ball retainer is essential, since all low-melting alloys creep at room temperature under relatively light continuous loads, regardless of

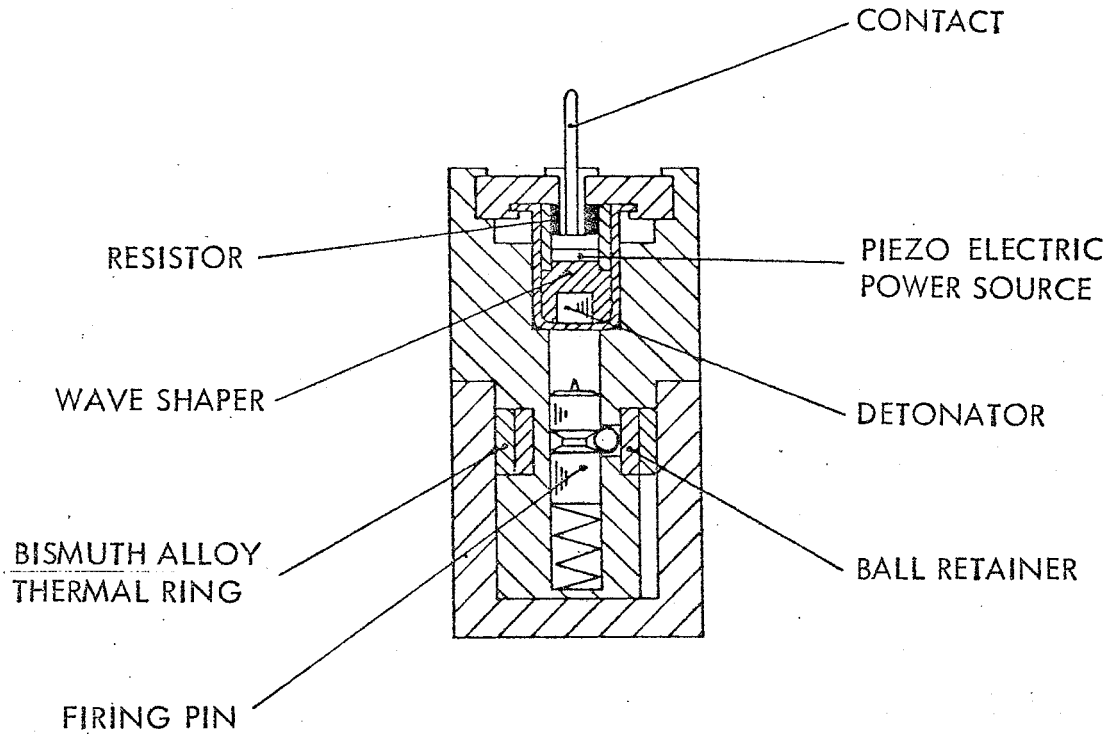

FIGURE 9. LOW-MELTING-ALLOY THERMAL SENSOR DESIGN - PIEZO CRYSTAL OUTPUT

their considerable variations in hardness (BHN 5 to 22) and tensile strength (3000 to 13,000 psi) and the ball loads would soon indent the alloy.

Alloy Characteristics - For the definite-temperature actuation required in this application, only eutectic alloys, which melt completely at a specific temperature, are suitable. The following alloys are available within the general temperature range desired:

TABLE 7.

Melting Temperature (°F)	Composition (%) Bi	Cd	Pb	Sn
203*	52.50		32.00	15.50
217	54.00	20.00		26.00
255**	55.50		44.50	
281**	58.00			42.00
288		18.20	30.60	51.20
291	60.00	40.00		

*Used in Fuze Mk 196/197

**Recommended for hotbox detector application

The alloys recommended are relatively inexpensive in comparison to those containing cadmium and avoid any question of the toxicity associated with that metal. Fabrication is particularly easy because alloys containing more than 48% bismuth either have little change in dimension or expand upon solidification, thus producing accurate, sharp castings. All are available commercially.

Sensor Cost/Reliability Considerations - The Fuzes Mk 196 and 197 are low-production items which do not furnish a direct cost basis of estimation for production rates in the hotbox detector

application. However, there are no known difficulties in manufacture that would be expected to result in unusually high costs.

It has been found desirable in similar ordnance devices to use 100% radiographic screening to verify complete and correct assembly of the internal components at a film and inspection cost of a few cents per unit. Reliability of such devices, as verified by periodic sampling tests, can typically be demonstrated to be in the 99.5% range at the 90% confidence level. A higher level of confidence against malassembly can be achieved by designing to facilitate automated, fail-safe radiographic inspection of the assembled unit. Since the development cost of such a special-purpose inspection machine (reference (f)) has been in the vicinity of $250,000, its use requires total production of several million units to be cost effective.

Phase-Change Alloy Sensors - The discovery in 1961 of the unique "memory" properties of the nickel-titanium intermetallic compound alloy known as 55-Nitinol has provided another alternative in thermal sensing where a large, direct mechanical output is useful. A thorough treatment of this alloy, its metallurgy, properties and applications are contained in reference (g)), prepared by the Battelle Memorial Institute for the National Aeronautics and Space Administration.

Nitinol 55 - The generic name of the series of alloys is 55-Nitinol, where Nitinol stands for NIckel TItanium Naval Ordnance Laboratory. These alloys, which have chemical compositions in the range from about 53 to 57 weight percent nickel, balance titanium, are based on the intermetallic compound NiTi.

The memory is such that, given the proper conditions, Nitinol objects can be restored to their original shape even after being "permanently" deformed out of that shape. The return to the original shape is triggered by heating the alloy to a moderate temperature. Considerable force is exerted and mechanical work can be done, by the

material as it "snaps back" to its original shape. This mechanical (shape) memory, which is otherwise unknown in engineering alloy systems, furnishes design engineers with the opportunity to design on the basis of an entirely new principle.

The Memory Process - The steps in the Nitinol shape memory process are shown in Figure 10. The material is first obtained in a basic shape such as wire, rod, sheet, tube, extrusion, and casting (step 1). This shape is then formed into the shape that the alloy will later be called upon to "remember," i.e., its "memory configuration" (step 2). Next, the Nitinol shape is clamped in a fixture that constrains it in the memory configuration (step 3). The Nitinol, restrained from moving by the fixture, is given a heat treatment to impart the memory and is then cooled (step 4). After the Nitinol part, in the memory configuration, has cooled to below the transformation temperature range (to be defined), the part is strained to form the "intermediate shape" (step 5). The intermediate shape is the shape that the part is to retain until it is heated to restore it to the memory configuration (step 6). The temperature to which the part must be heated to return it to the memory configuration depends on the chemical composition of the alloy. Figure 11 shows this relationship.

Of considerable interest to potential users of the alloy is the fact that the memory process (steps 5 through 7 in Figure 10) can be repeated many times. That is, after the part has recovered its memory configuration upon heating (step 6 in Figure 10) and cooled to below its transformation temperature range (step 7), it can be deformed again to an intermediate shape (step 5) and then heated to restore it to the memory configuration(step 6). This repeatability of the shape-memory effect has been demonstrated on samples that have been subjected to steps 5, 6, and 7, thousands and even millions of times.

As the 55-Nitinol part, in its intermediate shape, is heated to return it to its memory configuration, the alloy exerts very

(1) Obtain 55-Nitinol in a Basic Shape: wire, rod, sheet, tube, extrusion, casting, etc.

(2) Form the Desired "Memory Configuration"

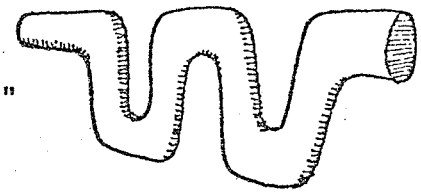

(3) Clamp Memory Configuration in a Fixture

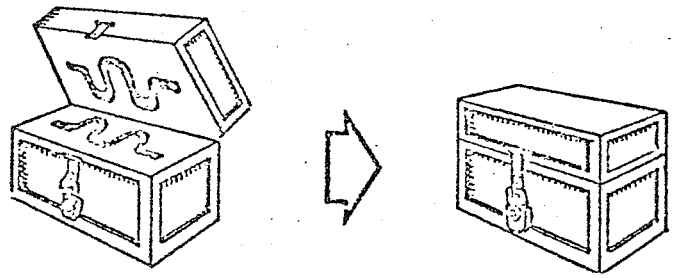

(4) Give Memory Heat Treatment (MHT)

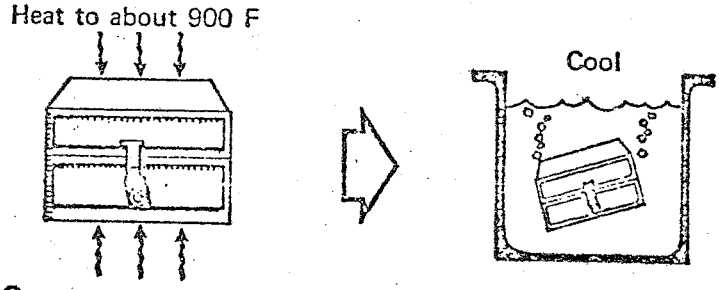

(5) Strain to the Intermediate Shape

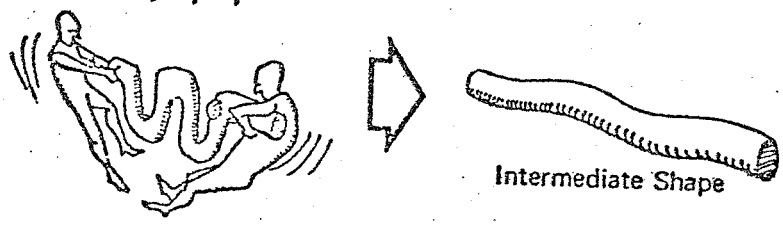

(6) Give Restorative Heat Treatment (RHT) (-300 to +275 F, depending on composition)

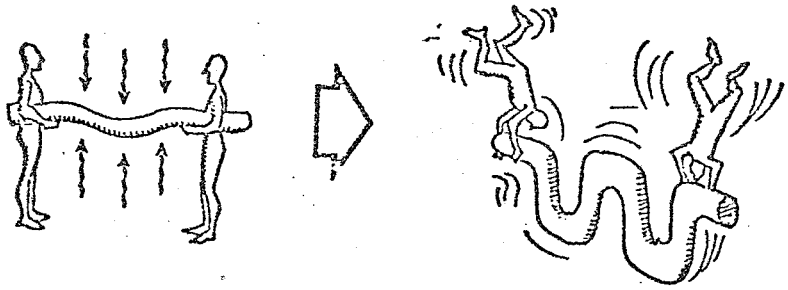

FIGURE 10. STEPS IN THE 55-NITINOL SHAPE MEMORY PROCESS[1]

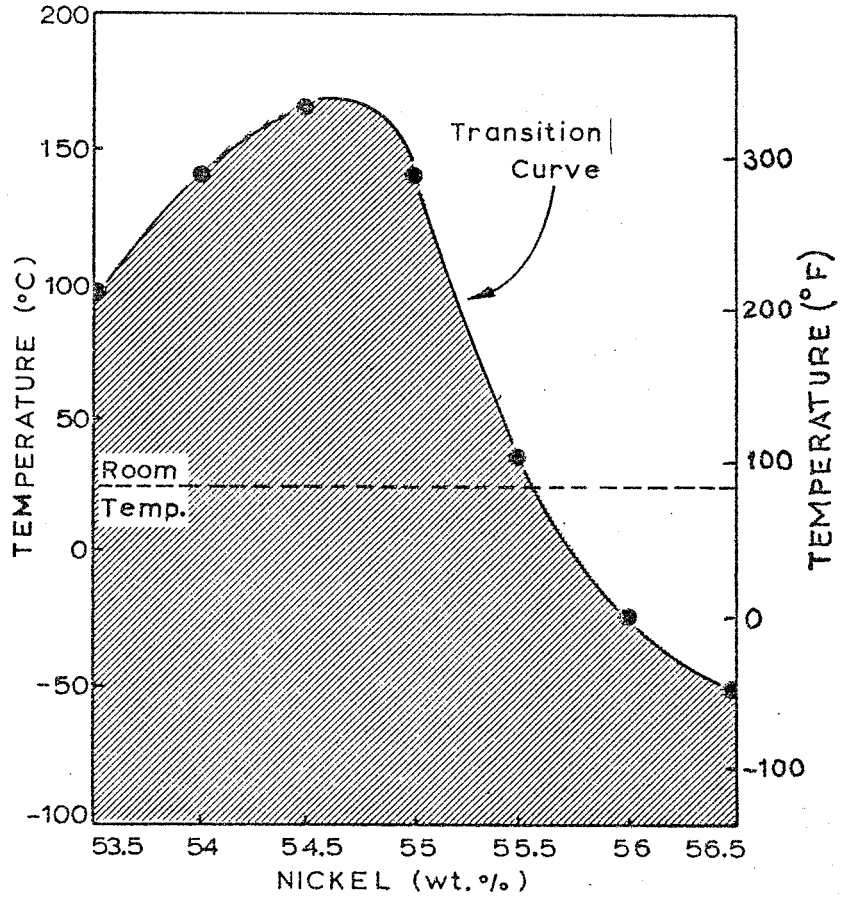

FIGURE 11. MARTENSITIC TRANSITION TEMPERATURE (T_C) CHANGE WITH MINOR VARIATIONS IN THE Ti:Ni RATIO

considerable force and can do significant mechanical work. Accordingly, the applications that have been envisioned for 55-Nitinol utilize not only the shape change but also these force and work capacities.

The Nitinol Sensor - The ratio of the energy output of a Nitinol element passing through its transition temperature to that of a bimetallic element can only be stated for specific designs. However, it is feasible to achieve a linear dimensional change in 30 to 50°F of four to five percent in heating the Nitinol element, while a temperature change of 1000°F produces an expansion of less than one percent in brass or other typical engineering metals and alloys. Since the Nitinol 55 has very respectable physical and mechanical properties, as shown in Appendix F , the work which it can do as a sensor is orders of magnitude greater.

A very compact sensor can therefore be designed, as shown in Figure 12. The thermal pin, strained in tension below its thermal transition temperature, restrains the spring-loaded firing pin. At the temperature range determined by its composition and processing, it shrinks to its memory configuration and releases the firing pin.

The exact processing used in the manufacture of thermal pins for the prototype hotbox sensor is detailed in Appendix G. Figures 13 and 14 show the mechanical work done by two Nitinol alloys at various amounts of prior strain. The most favorable properties occur at 6% prior strain, which was used in this case.* Stresses of 19,000 to 23,000 psi were required in the annealed 0.10-inch diameter rod, corresponding to 150 to 180 pound load. Upon mild heating, 4.5% recovery (75% of the prior strain) was achieved with the 54.8% Ni alloy (selected on the basis of its high transition temperature).

*At this strain, as much as 700 in.-lb/cu. in. of work is done over a range of 20°F; the work represented by normal expansion of a metal such as steel is about 25 in.-lb/cu. in. over a 200°F range.

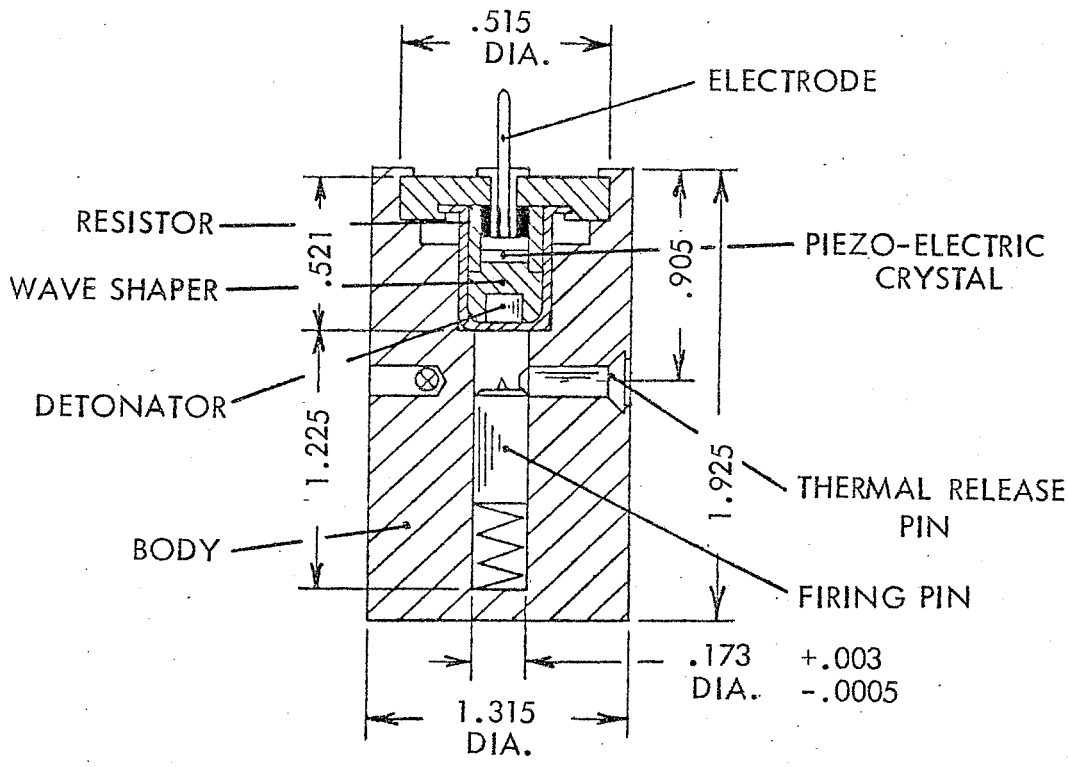

⊗ = POINT OF ACTUATION-TEST TEMPERATURE MEASUREMENT

FIGURE 12. THERMAL SENSOR DESIGN - PIEZO-CRYSTAL OUTPUT

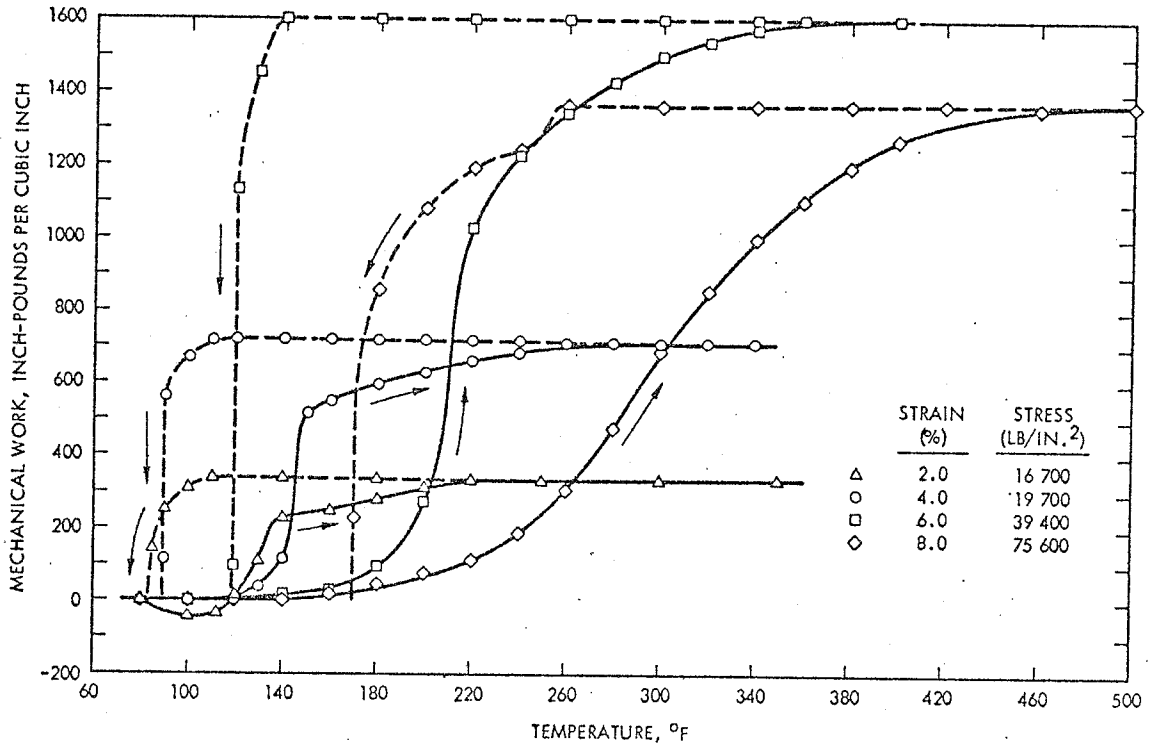

Alloy B - 55.0 Weight Percent Ni

FIGURE 13. MECHANICAL WORK VERSUS TEMPERATURE FOR 0.10-INCH DIAMETER NITINOL ROD

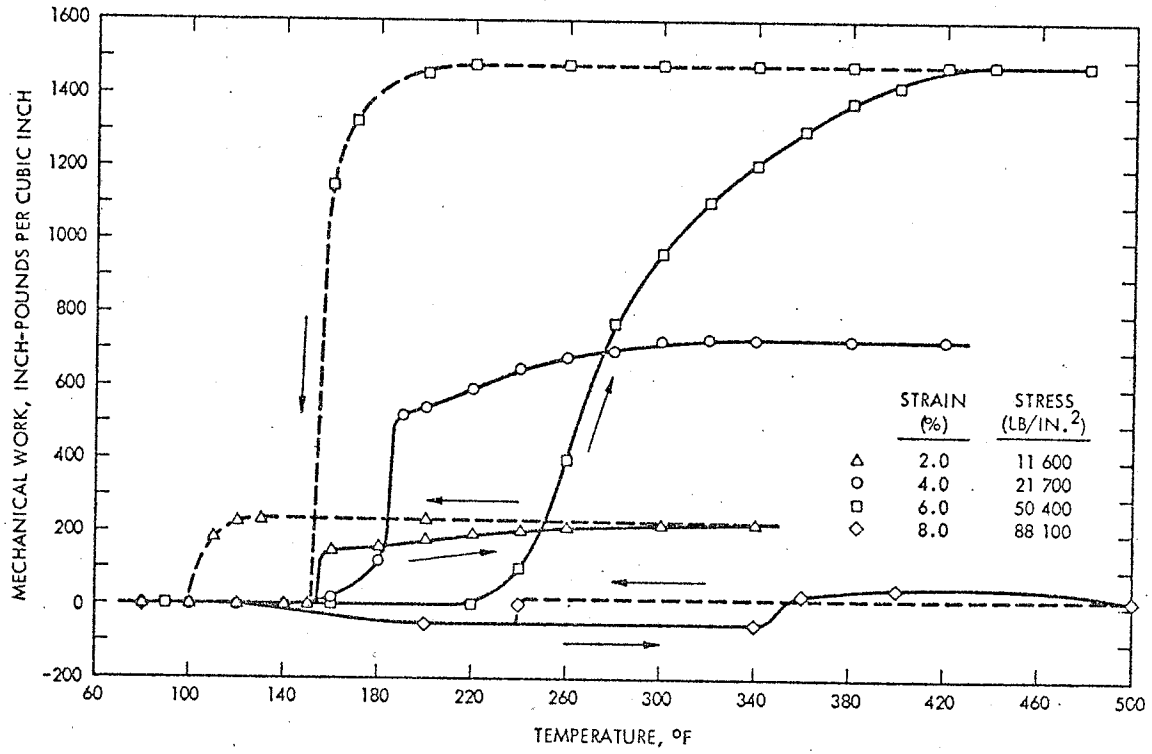

Alloy C - 54.8 Weight Percent Ni

FIGURE 14. MECHANICAL WORK VERSUS TEMPERATURE FOR 0.10-INCH DIAMETER NITINOL ROD

Sensor Design Considerations - The "cocked" firing pin (spring-loaded, released by a mechanical sensor-actuated trigger of some sort) is the most convenient source of power adequate to initiate an explosive primer or detonator and start weapon firing or other automatic action. Cocked firing pins are considered undesirable in weapon fuzes because a very high degree of safety is required and the presence of stored energy means that: (1) the triggering mechanism is not "fail-safe" and therefore can represent a hazard in the event of various part failures, defects, malassemblies or omissions, (2) the masses of the triggering system are usually large relative to the forces available from the sensor, and the device is therefore likely to be shock or vibration sensitive.

In addition, with the limited output of most sensors, one or more force-multiplying mechanisms such as ball releases or rotating half-shafts are needed between the spring force and the sensor output, resulting in a relatively complex device.

In this application, although a very low false-alarm rate is essential, there is no safety implication in the use of the cocked firing pin because only a detonator is involved and this can be completely housed so that no personnel or fire hazard would result from an inadvertent initiation. The Nitinol pin forces are so large that it can release the firing pin directly and inertia forces from shock or vibration are relatively insignificant.

Consequently, the Nitinol sensor design was made as simple, direct and small in size as appeared practical, with the objective of determining with a very limited amount of hardware whether any environmental degradation would result and whether adequate control of operating temperature could be attained with normal manufacturing tolerances on a very minimum number of key dimensions.

Firing Pin/Thermal Pin Interface - A standard firing pin design of 0.168-inch diameter was selected, with spring force and travel ample to initiate the Navy Mk 95 stab detonator. Appendix H

presents the design analysis involved. To provide a known interface between firing pin and thermal pin surfaces, a matching 0.015 to 0.020 inch x 45° chamfer was hand-lapped on the end of the Nitinol pin after it was cut to length as described in Appendix G . See Figure 15.

The longer the gage length of the thermal pin, the more accurately its relationship to the firing pin can be controlled during the thermal actuation process. Since approximately 4½% recovery was available, a relatively short (0.500 inch) gage length was selected, resulting in 0.023 "travel." Intrusion of the pin into the 0.173-diameter cylinder containing the firing pin was regulated by drilling the conical recess for the head of the thermal pin to an appropriate depth on a selective-assembly basis. Pin intrusion was measured to the nearest 0.001 inch by plug gaging. Intrusion was regulated to 0.017 ± 0.002 inch. The thermal pin was then held in place by staking the body material over its head. From 0.009 to 0.013 inch withdrawal of the pin is therefore required for actuation.

Thermal Sensor Tests - Ten sensor units were fabricated, assembled, subjected to various environmental tests, and actuated by heating, as detailed in Table 8 . The environmental tests used were selected to represent those aspects of the unsprung, exposed sensor location in the hotbox detector application which might be expected to have some possible effect on sensor performance. The exact conditions of testing were as specified in Appendices E and B , covering the applicable MIL-STD-331 and special Unsprung-Mass Vibration/Shock Tests, respectively.

The Thermal Shock Test, subjecting the units to sudden transitions from +160 to -65°F, was selected to check for effects of a temperature approaching the martensitic transition temperature of the Nitinol 55 and for any "ratcheting" effect from differential "normal" or transitional thermal expansion of the sensor parts.

The Transportation Vibration Test, of 24-hour duration at sinusoidal vibration levels of 2 and 5g over the 10 to 500 Hz range,

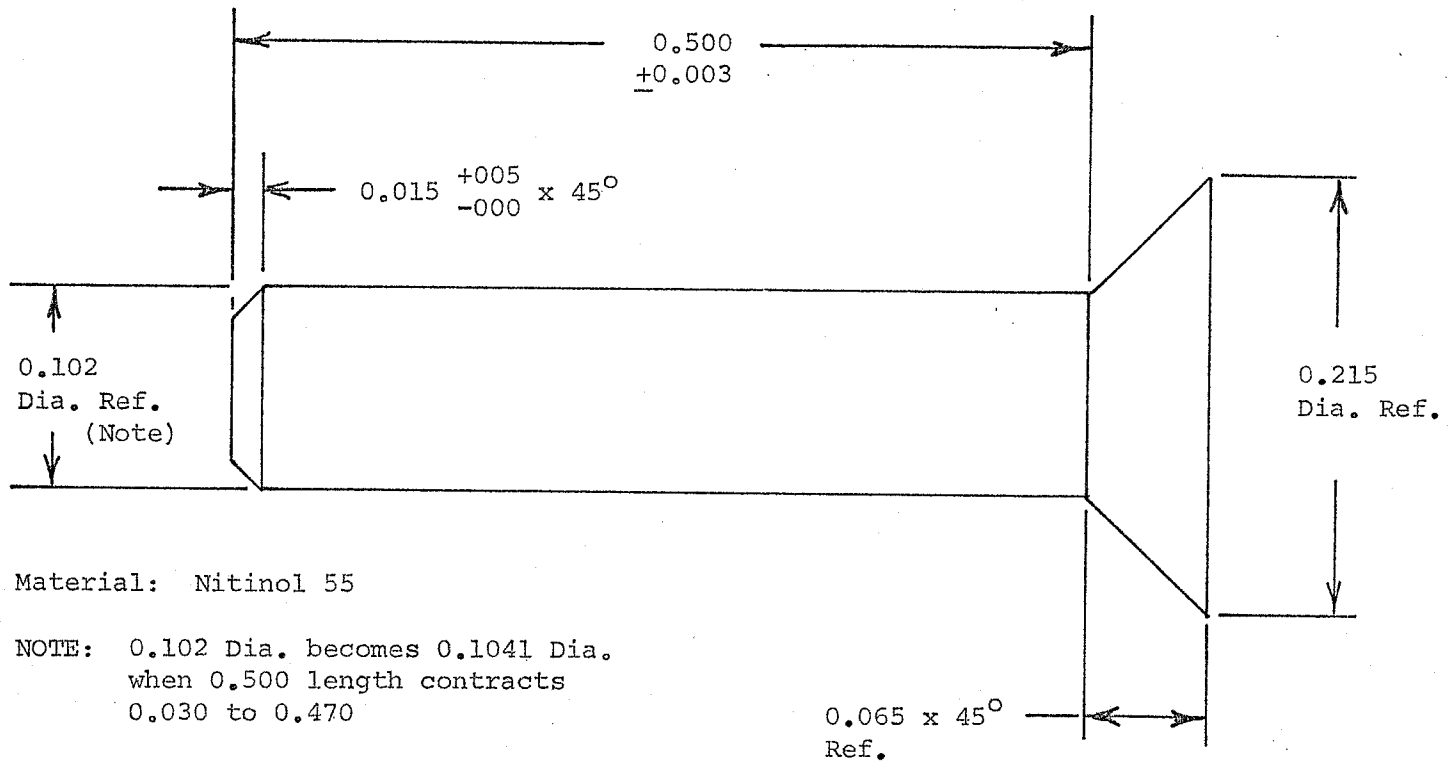

Material: Nitinol 55

NOTE: 0.102 Dia. becomes 0.1041 Dia. when 0.500 length contracts 0.030 to 0.470

FIGURE 15. THERMAL RELEASE PIN

TABLE 8. NITINOL THERMAL SENSOR TESTS

Test No.	Nitinol Pin Intrusion (in.)	Thermal Sensor Actuation Temp. (^{o}F)	Prior Test on Thermal Sensor
1	0.018	285	None
2	0.017	265	None
3	0.015	285	TS
4	0.016	305	TS,TV
5	0.015	270	TS,TV,RV
6	0.016	290	TV,RV
7	0.019	290	TV,RV
8	0.019	255	TV,RV
9	0.017	275	TV,RV
10	0.017	275	TV
11	0.016	310	None
12	0.016	285	None
13	0.018	205	None

Prior Test Symbols: TS - Thermal Shock, Test 113, MIL-STD-331

TV - Transportation Vibration, Procedure I, Test 104 ($75^{o}F$ only), MIL-STD-331

RV - Random Vibration (see Appendix B), $75^{o}F$ only

represents some acceleration of anticipated amplitudes over a limited duration, to provide some assurance of endurance over a longer period of service without involving an impractical test duration.

The rationale for the special Unsprung-Mass Vibration/Shock Test is given in Appendix B. This relatively severe test provides random peak loads in the 30g range to test the resistance of thermal pin/firing pin contacting surfaces to a smaller number of shocks to be expected from occasional "abnormal" impacts in service.

Test Results - No units actuated or were visibly affected by any of the tests. Since the critical parts of the units are assembled by staking to represent the non-adjustable, one-shot design considered most appropriate for this application, post-environment operational tests were conducted without any disassembly or other examination for internal effects. Units were simply heated from the base on an electric hot plate in a room-temperature ambient until actuation. The resulting rate of temperature rise was about 15°F per minute, measured at the location shown.

As shown in Table 8, the 10 units all functioned properly, at an average temperature of 279.5°F with a standard deviation of 14.4°.

Figure 16 is a graphic presentation of the data from these tests. From this limited number of tests, no discernible trend of actuation temperature with pin intrusion is indicated, nor is any effect of the environmental preconditioning.

Subsequently, three of the units were refurbished with new thermal pins (from a different melt of Nitinol), firing pins and piezo-electric output units for system-test use. No environmental conditioning was applied. All three units operated when heated, but actuating temperatures were much more variable at 310, 285 and 205°F, respectively.

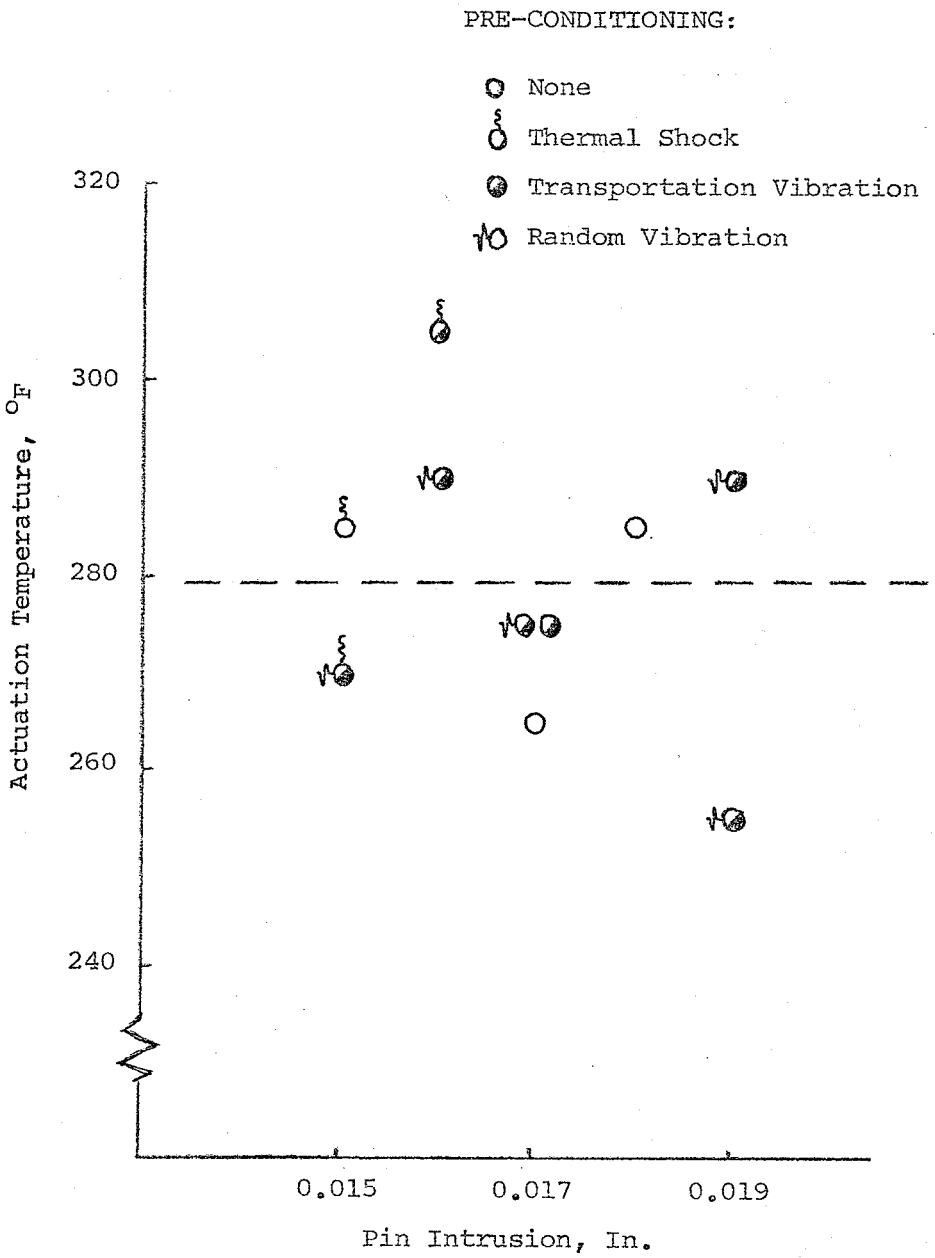

FIGURE 16. NITINOL THERMAL SENSOR TESTS, ACTUATION TEMPERATURE VERSUS PIN INTRUSION

Discussion - The indicated reliability and ruggedness of these units is satisfactory, and the fact that all 13 actuation temperatures in this "first-try" design were within a usable range for the intended application is highly encouraging. The temperature variation in the initial test of ten units (σ = 14.4°F) is somewhat larger than might be desired, and the reason for the larger variability in the refurbished units is not apparent.

The method of selecting the pin engagement to obtain the operating temperature desired can be seen from Figure 17 , derived from the data of Figure 14 on the mechanical work versus temperature* for a Nitinol 55 alloy representative of that selected for this design (54.8% Ni) at the optimum 6% pre-strain. The steepest portion of the work versus temperature curve occurs between 240 and 280°F. In the 0.10-inch diameter sensor pin with its 0.50-inch gage length, this can be equated to pin travel as shown.

The particular alloy selected has the rather flat dimensional transition range versus temperature characteristic of Nitinol alloys with martensitic transition ranges above 200°F; the other curve shown for a slightly more nickel-rich alloy (55.0%) has a narrower (sharper) region of rapid dimensional change but at a temperature in the 200-220°F range, probably somewhat lower than desired for the hotbox detector. Also, the nickel-rich alloys tend to have their transition temperature decreased a few degrees by any final cold-work which may be involved in the fabrication process.

Nitinol Thermal Sensor - Conclusion - It may be concluded that a compact Nitinol thermal-pin sensor can be built at very low cost to give adequate accuracy at the desired actuation temperature range

*On the plot of Figures 13 and 14, rate of change in linear dimension is essentially proportional to the slope of the curve of work done per unit volume because the specimen was used to lift a constant weight as the temperature rose.

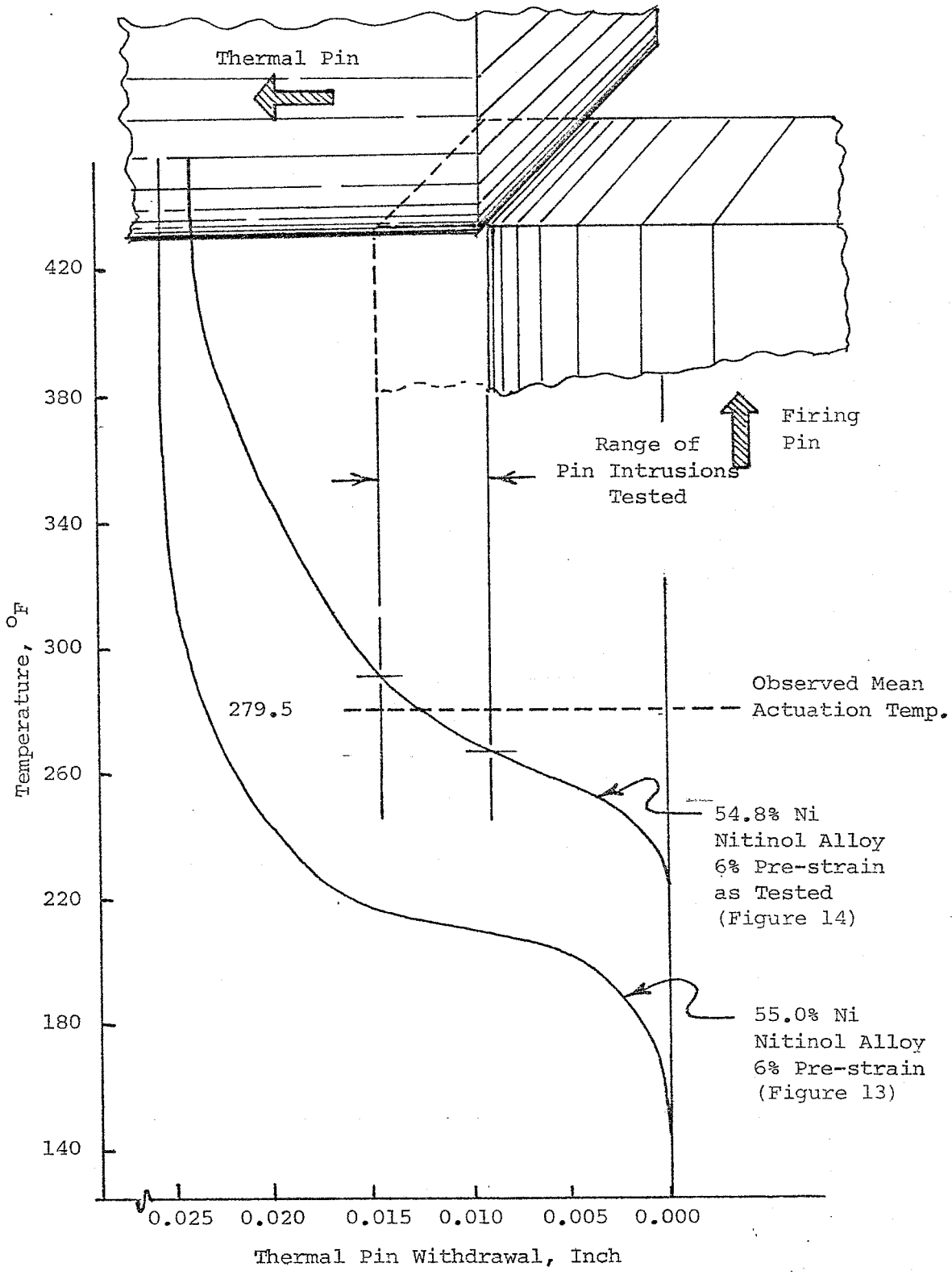

FIGURE 17. THERMAL SENSOR DESIGN ANALYSIS

and that it may reasonably be expected to provide long-life reliability under conditions to be expected on a railroad journal in unrestricted service.

Resonant Rock-Off Detectors

As discussed above (p. 25) and in Appendix C , resonant rocking-mode oscillations must be detected before they reach the amplitude at which the truck springs become fully unloaded and sudden wheel-lift begins. Various means for detecting this situation and differentiating it from vertical (symmetrical) mode oscillations have been considered.

Excessive-Amplitude Detection - As can be seen from Figure 18 the position of the lower bolster face (and the plane of the top of the springs), measured from a reference on the sideframe, at this point of complete unloading is the same for any particular car, whether it is empty or loaded.

A rigid position sensor, set to "sound the alarm" whenever the bolster approaches this fully-unloaded position, could therefore serve as an incipient rock-off detector. However, there are problems with this approach:

a. If set to avoid triggering on normal motion in an empty car, it will only detect the last cycle of build-up to rock-off in a loaded car--too late!

b. The allowable permanent set acquired by the spring group (9/16 inch for the D-4 springs in a 3-1/16 inch-travel truck, for example, per AAR Interchange Rule 17) is about half the static deflection of the empty car. Periodic adjustment would thus be required to retain its effectiveness.

It is also probable that there are occasional single oscillations in "normal" operation which would actuate such a rigid sensor (particularly in an empty car) and produce an excessive false-alarm rate. These might result from such matters as coupling impacts, slack action

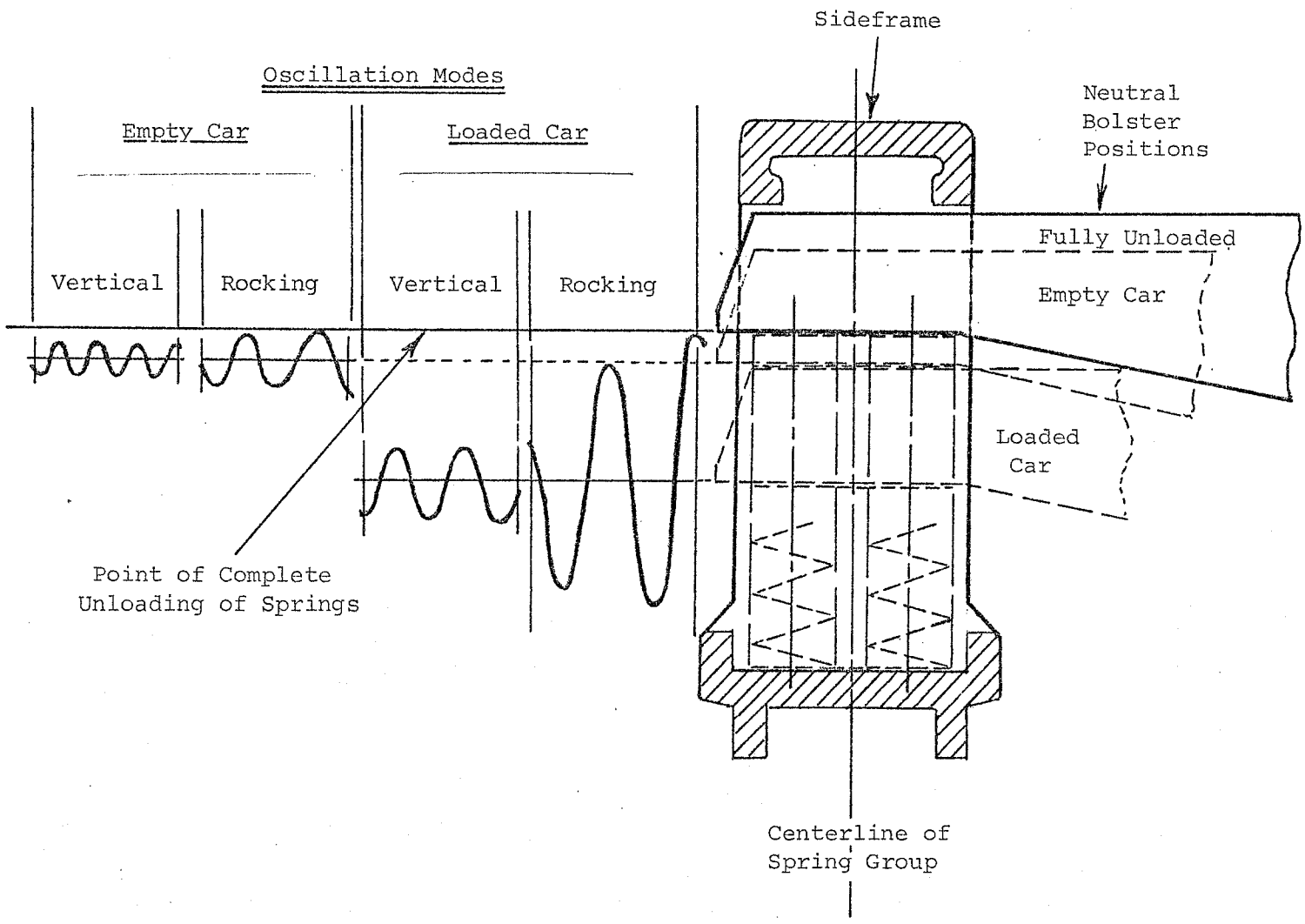

FIGURE 18. EMPTY AND LOADED CAR OSCILLATION MODES

and individual track irregularities, as well as impacts and motions associated with mechanized car loading and unloading (unclamping after car-dumper operation, for example) and even the wind gust from a passing train.

Integrating Amplitude Detection - The integrating system of detection illustrated in Figures 19 and 20 is therefore considered more promising.

Hydraulic Actuator System - The heart of this system is a hydraulic actuator (Figure 20) with a flow control element. The actuator will record the resonant car-body rocking motion when mounted on the bolster with the actuating arm attached to the truck sideframe. Each oscillation, movement between the bolster and sideframe, represents a stroke on the hydraulic actuator. A stroke causes compression of the hydraulic fluid coacting against the spring-loaded ram of the actuator and causes the ram to rise. A continued number of strokes will close the gap between the ram and truck sideframe. When the gap is completely closed the ram jams against the sideframe and crushes a sensor (piezo-electric element, explosively-stressed piezo element or stab-initiated thermal battery, as described previously in connection with the thermal sensors).

An electric current is generated by this action. The current flows by wire to an explosive actuator and causes it to function, venting the air brake train line and stopping the train.

The above is a description of an actual impending derailment condition due to a certain order of hydraulic actuator functions with time. When the sequence of actuator functions does not match the time cycle, the actuator ram cannot reach its full stroke due to the flow control element. For example, when the actuator receives a stroke the hydraulic pressure is amplified under the ram. Due to the flow control in the actuator which continuously permits flow, the second stroke will not lift the ram sufficiently to store and record the second

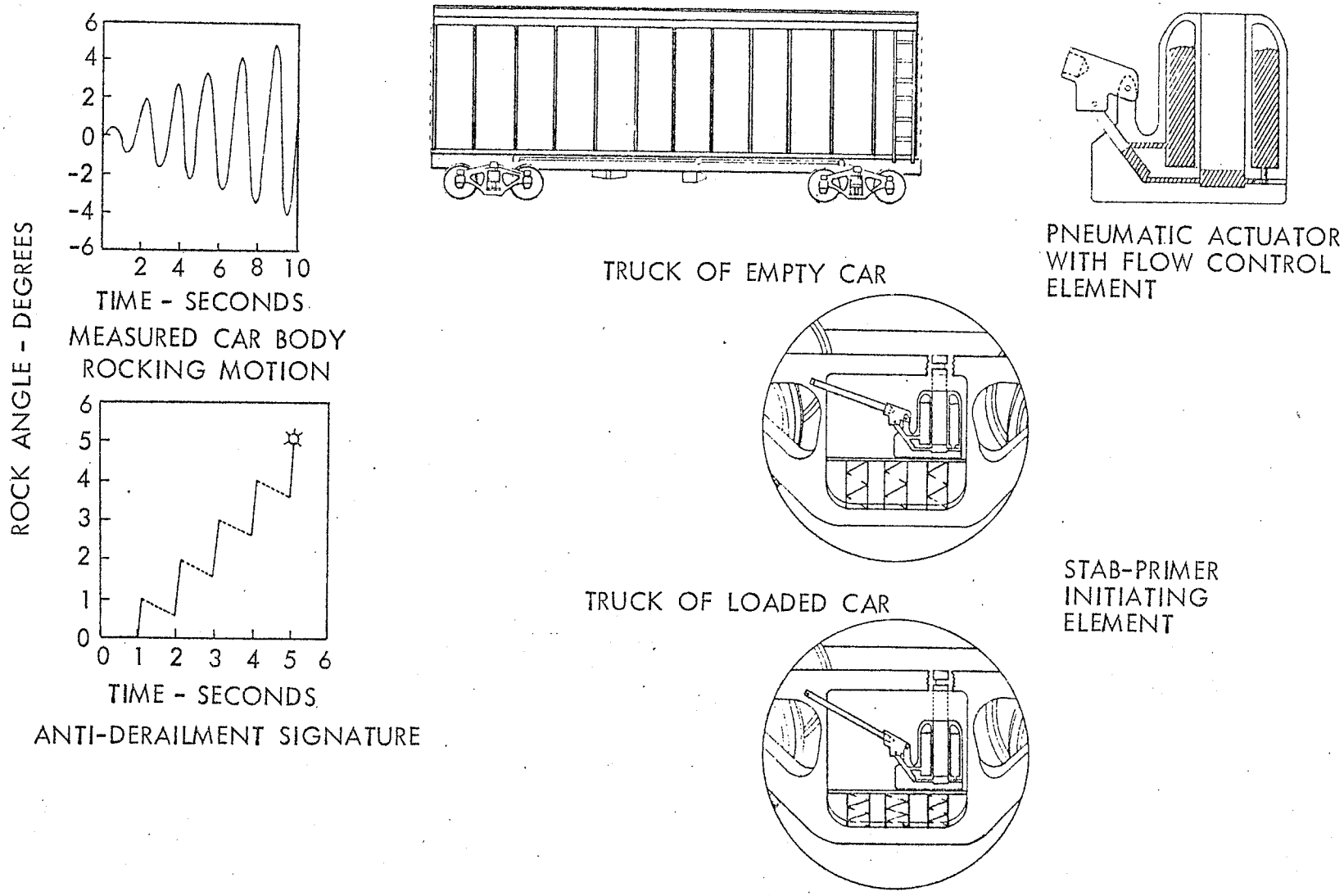

FIGURE 19. RESONANT CAR-BODY ROCKING DETECTOR SYSTEM

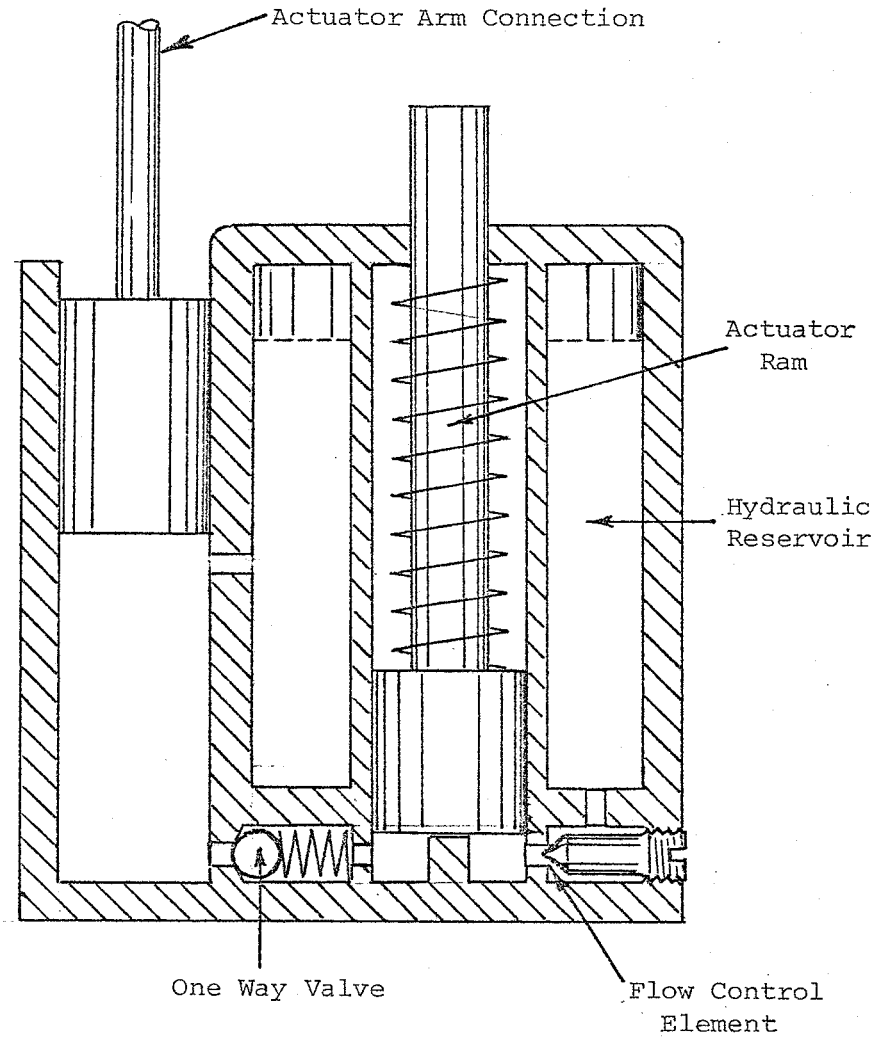

FIGURE 20. HYDRAULIC ACTUATOR WITH FLOW CONTROL ELEMENT

oscillation because of lag in time; the pressure relief is greater than the pressure input.

Conversely, the opposite is also true. If the actuator input is greater than the built-in signature the ram will rise faster to its fully extended position and cause the detector system to perform its function and stop the train. The system is thus to some extent self-compensating for empty/load conditions. The larger oscillations associated with the loaded-car resonant rocking will produce greater ram motion (per stroke), but the lower neutral position of the bolster of the loaded car requires greater ram travel to contact the stab primer or other signal initiating element.

The system is also somewhat self-compensating for permanent set in the truck springs; as the neutral position of the bolster becomes lower, the overlap of the hydraulic actuator piston and the orifice from the reservoir becomes longer; more fluid is pumped for a given actuator stroke, but the ram has farther to go.

Environmental Resistance of Sensor Output Element - The available force in motion of the truck suspension is so large (at least 8000 pounds per spring cluster in an empty car) that even the energetic tampering, ice, flying ballast and other environments to which the exposed sensor output element (piezo crystal or thermal battery initiator) is subject can be overcome to an acceptable degree by a brute-force approach. The "target discriminating" techniques discussed on p. 73 and 75 are applicable.

Other Design Considerations - Fluid used must maintain an acceptably constant viscosity over a wide range of temperature (-40 to +120°F), in particular not becoming so viscous at low temperature as to cause false alarms by refusing to pass through the flow control element. Viscosity effects on performance can be minimized by the use of a relatively large unit in which the resistance of the flow control unit can be primarily due to flow velocity rather than viscosity.

The wear situation on the device is analogous to that in a shock absorber. Further analysis of truck suspension action in normal (as opposed to rock-off) modes may show that a considerable "dead zone" around the neutral position can be provided in which the constant small-amplitude suspension motions are isolated from the actuator units (as by clearance in the linkage) and only a small fraction of the strokes cause motion (and wear) of the cylinders and pistons.

Oscillation-Mode Discrimination - In the event that analysis or test data indicates that some periodic vertical vibration modes of acceptable (non-hazardous) amplitude and duration cannot be distinguished from hazardous rocking modes, a cross-connected system (such as that shown schematically in Figure 21) in which symmetrical oscillations cancel and only rocking modes produce net ram movement can handle the situation without question at the low frequencies (0.6 to 4 Hz) involved. The additional complexity is undesirable but not so great as to rule out the validity of the concept. The $200 cost estimate used in evaluating the potential return on investment for the rock-off sensor (p. 121) makes some allowance for this eventuality.

Discussion - This first-phase feasibility study does not go deeply enough into the analysis of available data on suspension motion to determine with any degree of precision the characteristics and parameters of a successful incipient rock-off detector, but indications to this point are highly promising. Specific matters for further inquiry include:

a. Determination of number of rock-off susceptible cars, present and future.

b. Analysis (and perhaps test on rock-off track) to predict effectiveness of brake application in forestalling rock-off.

c. Data on relative frequency of occurrence of rock-off in empty and loaded cars.

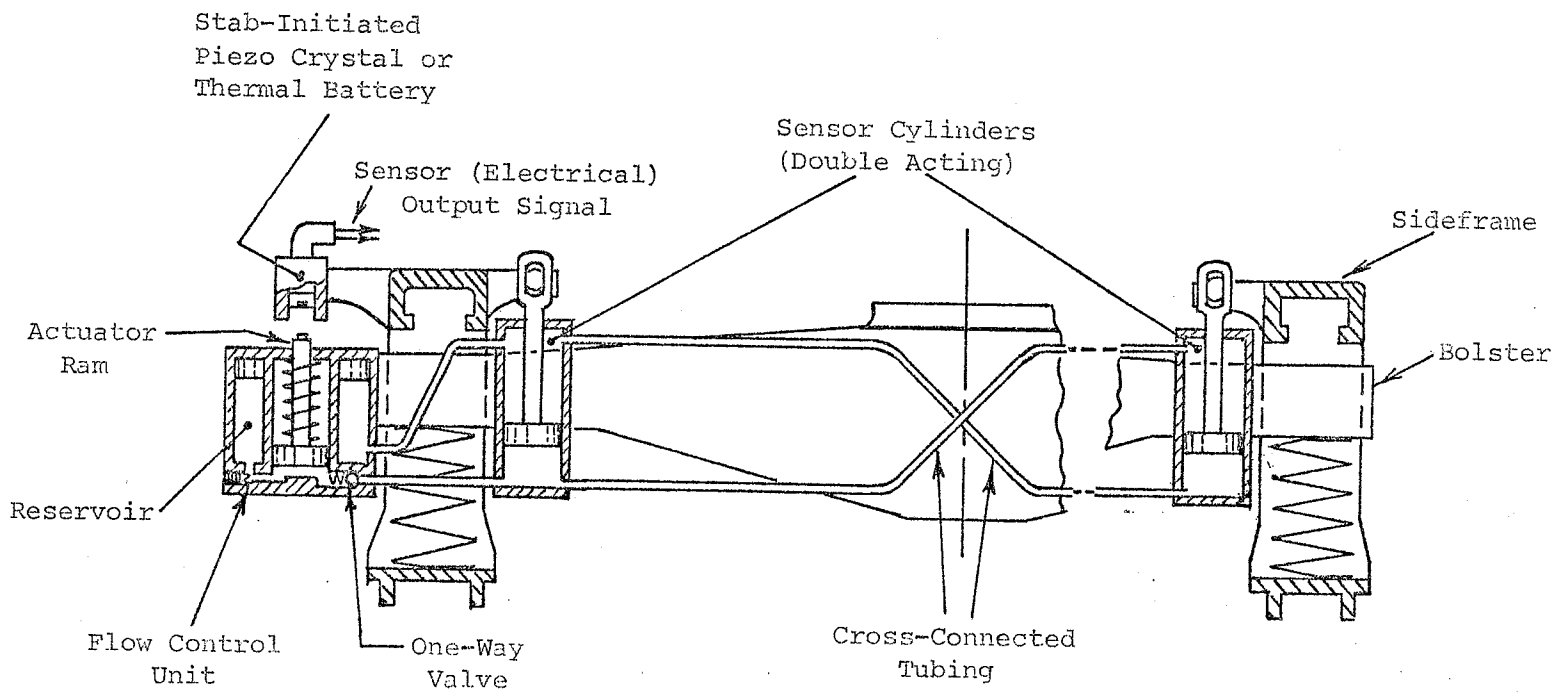

FIGURE 21. CROSS-CONNECTED ROCK-OFF SENSOR SCHEMATIC

d. Analysis of vertical suspension oscillation amplitudes in normal operation.

e. Dynamic analysis of hydraulic sensor systems to verify specific parameters (time constants, flow rates, piston/orifice overlaps) necessary to provide reliable discrimination.

Local Derailment Detectors

As discussed above (p. 33) and in Appendix D, an integrating accelerometer mounted on the journal and requiring a combination of 100 to 150g and 10 to 15 ft/sec velocity change for actuation should be capable of detecting the impact of the wheel on its axle with the roadbed in a local derailment while ignoring normal shock and vibration conditions in service.

Accelerometer Concept - For these particular conditions, a simple preloaded-spring, seismic-mass system arranged to sense both acceleration threshold and velocity change before actuation is of reasonable size. Escapements, clutter mechanisms or flywheels, needed in mechanisms required to integrate over longer periods of time, can be eliminated by simply requiring a certain amount of spring compression by the mass (about ¼ inch in this case) prior to actuation. The energy thus absorbed is made equal to that represented by the mass of the seismic element and its change in velocity.

Unified Thermal and Roadbed Impact Sensor - Figure 22 shows a specific design (actual size) for such an impact sensor unified with a Nitinol thermal sensor of the type developed and tested for the hotbox sensor system. Shrinking of the thermal pin (one-inch gage length shown) at the selected temperature releases the spring-loaded firing pin. This fires the stab primer, actuating the thermal battery (shown) or, as an alternate, a piezo-crystal element, generating the desired electrical output.

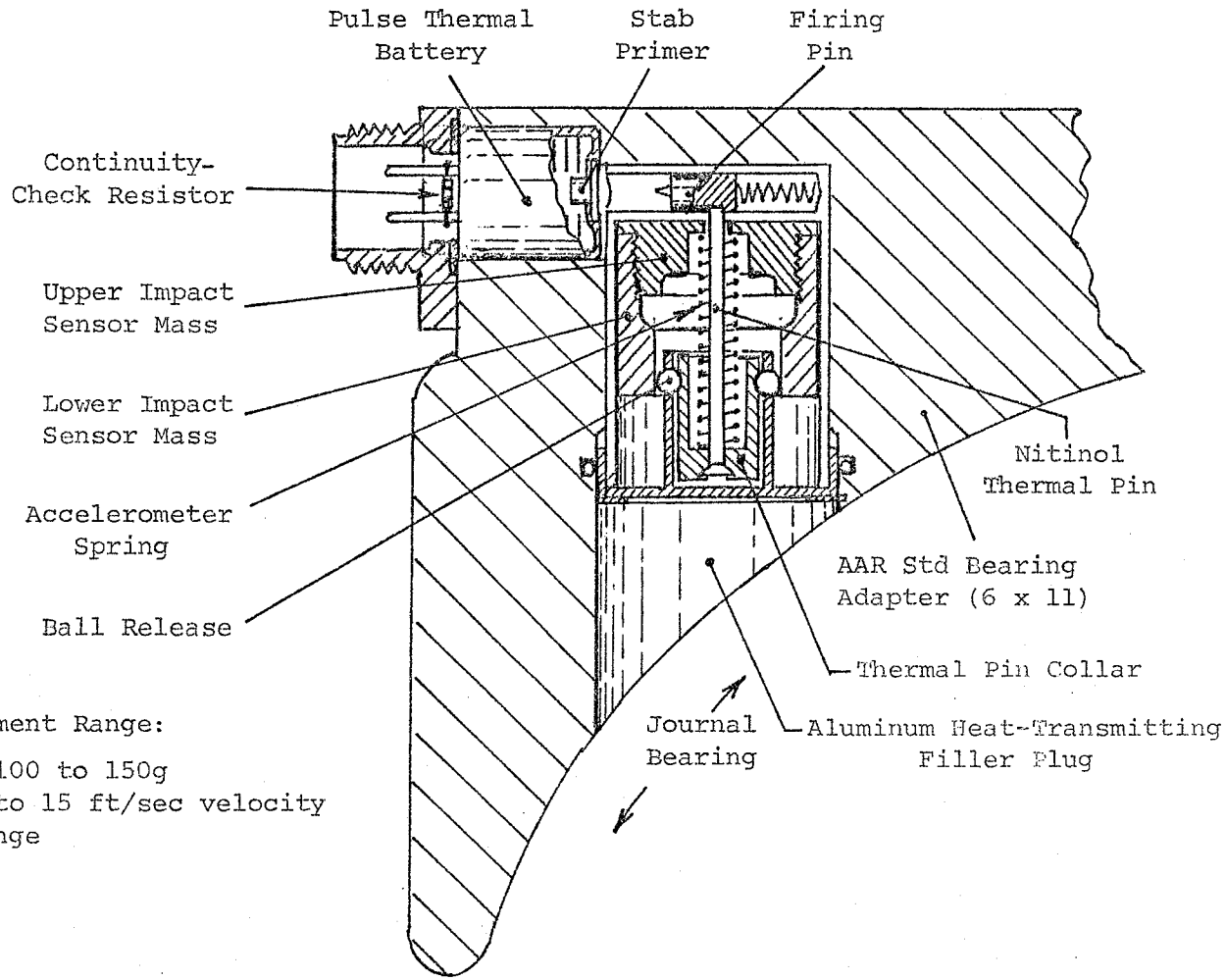

Accelerometer Adjustment Range:

By Spring Preload - 100 to 150g
By Mass Travel - 10 to 15 ft/sec velocity change

FIGURE 22. COMBINATION ROADBED-IMPACT AND THERMAL SENSOR

Accelerometer Function - Upon impact with the roadbed of a derailed wheel, upward acceleration of the sensor above a value corresponding to the preload of the accelerometer spring results in movement of the upper and lower impact sensor masses (as a unit) downward with respect to the (three) balls which are locking the thermal pin collar in position. After travel corresponding to the threshold velocity change, the step inside the lower mass frees the balls to move outward, releasing the thermal pin collar. The accelerometer spring then pushes the thermal pin and its collar downward, releasing the firing pin and initiating the same action as the thermal sensor.

The arrangement shown is as it might be built for experimental service to determine the proper settings for detecting the largest practical proportion of local derailments without encountering an excessive false-alarm rate. The two-piece sensor mass allows adjustment of the velocity change (ΔV) threshold independently of the acceleration threshold. For mass production, a one-piece mass might be used.

Sensor Adaptation - The combination sensor concept is illustrated as it might be fitted into a standard AAR Roller Bearing Adapter, completely protected mechanically, sealed against moisture, and provided with a rugged electrical output connector. The thermal path from the journal bearing to the thermal pin is questionable as shown, and adequately quick response to bearing temperature rise would be a consideration in any actual design.

Other Design Considerations - The accelerometer concept shown is a very simple version of typical projectile impact fuze design extending over many years. Since conditions on the railroad journal, though rugged, are mild compared to gun firing accelerations (5000 to 30,000g), a design for this service can be undertaken with a

high degree of confidence that twenty-year service life can be achieved in a mass-producible unit at low cost.

In particular, the high preload level (about 5 pounds in this unit), which essentially prevents any relative movement of internal parts under vibration in such a self-centering, self-aligning assembly, is the key to its indefinitely long service life. When preloads of 25 to 50g or more can be used, as in fuzes for small rockets, exceptionally low production costs have been obtained routinely by virtue of the moderate level of precision required, even for relatively complex mechanisms.

Discussion - The determination by further tests and analysis of derailment impacts of whether or not a single threshold setting of acceleration and ΔV will allow a sensor to function properly in both loaded and empty cars is the key matter in the Local Derailment Sensor design. In the event that there is an overlap between normal shock conditions in a loaded car and derailment shocks when it is empty, there are alternative courses of action:

a. Set the sensor to reliably detect loaded-car derailments only and take the proportionate benefits (this approach is considered in the return-on-investment section of this report).

b. Provide an automatic empty-load sensor-sensitivity adjustment (actuated by truck bolster spring compression, via a flexible connection such as a choke cable to the sensor).

c. Provide alternate empty and load sensor elements of different sensitivities, automatically selected as in b.

How Many Sensors? - Since both wheels will derail in almost any case, it would be possible to reduce cost by using one combination and one thermal sensor per axle. However, since no additional sensor connections are required for the combination sensor and the interconnection network is one of the most costly parts of the basic system, overall system savings would be relatively small and partially offset

by having two types of sensor. Impact data, when available, may indicate that two impact sensors per axle, set at a level to provide a very low false-alarm rate, will provide significantly better empty-car derailment sensing because of the better chance that one journal or the other will hit hard enough to trigger the sensor.

Handling Shock Susceptibility - Some consideration must be given to the possibility of inadvertent actuation of the sensor in handling; military impact sensors are usually locked until the projectile arms after it has left the launcher. For this relatively insensitive sensor, with no hazardous (not self contained) explosive output, a manual or automatic arming system would probably represent an unwarranted expense and, as a potential source of leaks, a possible threat to long-term reliability. When separated from the truck, sensors with this high acceleration threshold need only a modest amount of cushioning to avoid firing when accidentally dropped.

Once in place in a truck not yet under a car, triggering will involve a fairly substantial drop (greater than 12 inches onto an exceptionally hard surface) since the ΔV-magnifying "levering"action only takes place when the car weight is involved, and inadvertent firing should be rare.

In any case, a reliable external indication that the sensor has not been actuated should be provided for checking at the time of installation.

ON-CAR COMMUNICATION LINK

General Requirements

Once a trouble signal is generated at one of the sensor locations and amplified to a usable power level, economic logic dictates that it be transmitted to a single on-car location* to actuate the inter-car communication link input. Several aspects of any such system are vital:

Parallel inputs (up to at least eight per car) must be mutually compatible. Failure of one or more sensors should not impair system operation.

System refurbishment after an actuation, if required at all, must be reasonably inexpensive and capable of accomplishment at relatively widespread and unsophisticated facilities.

Low cost over the complete life cycle, including all initial hardware costs, installation and check out, maintenance and repair, periodic continuity checks, and accommodation to other car maintenance procedures is vital to system.

Demonstrable ruggedness and predictable life are particularly important to acceptance of a sensor system because there is no counterpart of such a communication system in widespread use on freight cars except the unsubtle, time-proven but still troublesome mechanical (or pneumatic-mechanical) brake rigging.

Electrical Systems

The acceptability and economy of a hard-wire parallel electrical network for this purpose depends primarily upon the adequacy of the input signal in maintaining a high signal-to-noise ratio at the output actuator. Two input systems have been given primary consideration.

*It is conceivable that in a unit-train operation several cars might be considered as an entity.

Detonator-Stressed Piezo-Electric Crystal - A requirement to initiate the explosive in shaped-charge anti-tank warheads from the base (rear) of the round in a matter of microseconds after target impact led Army fuze designers to use the output of a piezo-electric crystal as the source of firing energy for an electric detonator.

Development Background - Initially, the direct forces of impact with the crystal were used to generate a firing signal sufficient to initiate a very sensitive (500 ergs or less) carbon-bridge detonator. Difficulties in firing reliably at various velocities at oblique angles of impact on different targets and in discriminating against rain impact in high-velocity weapons then led to a two-stage system in which a stab-initiated explosive element detonated by the impact on its firing pin "stresses" (actually, destroys) the crystal, thus generating an electrical signal whose magnitude is independent of the nature of the target impact.

Since there is a "rat race" between generation of a large electrical output from the extremely high explosive-generated pressures on the crystal and its termination by destruction of the electrical continuity of the output, an aluminum "wave-shaper" is used to strike a balance between these opposed events. Design of the wave-shaper is strictly empirical.

Crystal materials have also been significantly improved in output, reliability and uniformity, and in resistance to adverse environments. The lead zirconate/lead titanate sintered elements, electrically polarized to obtain the proper stress-output axis, have a Curie point in the region of 700°F and therefore are not degraded at weapon flight temperatures.

"Target" Discrimination - Figure 23 is the forward impact-sensing ("point detonating") element of the Navy ROCKEYE II bomblet, a typical Navy-developed application of this principle. This element is required to discriminate between impact on "hard" (1/16 inch or

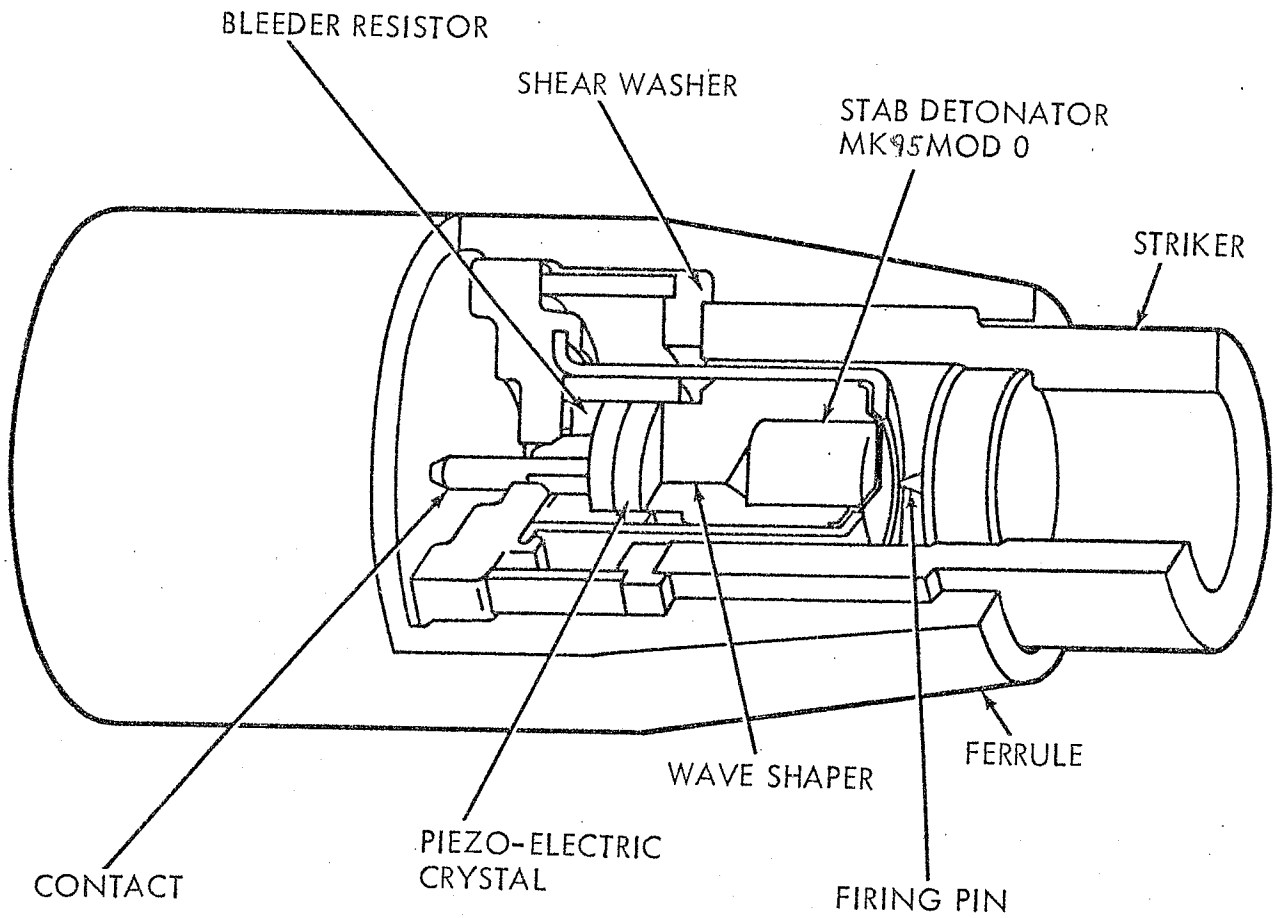

FIGURE 23. ROCKEYE II IMPACT SENSING ELEMENT

thicker steel) and "soft" (earth, 1/4-inch plywood) targets, firing relatively instantaneously ("super quick") on the former and remaining inactive on the latter so that a slower-acting, inertia-operated base fuze can detonate the round at a more effective location. This discrimination is achieved by requiring that impacts on the point-detonating (PD) striker rupture the shear washer before the firing pin can be driven into the stab detonator. The shear element is calibrated by full-scale target impact tests at appropriate velocities and obliquities.

Figure 24 shows another Navy application in which the "ingestion" principle is used to provide reliable instantaneous initiation via the crystal on impact with water, soft earth or hard targets at moderate velocities (100 to 150 ft/sec) but no firing while penetrating foliage, including light tree branches. The firing pin is shrouded by a ring which prevents twigs from impacting it but which serves to contain water or other soft but massive targets until the pressure moves the firing pin and initiates the detonator. Hard target impacts overcome the shear element to fire the detonator.

With the very large forces available in railroad truck suspensions, similar brute-force arrangements can be used to discriminate against casual tampering, ice and snow, flying ballast and other extraneous influences in the rock-off detector application with considerable confidence.

ROCKEYE II Piezo-Electric Impact-Sensing Element - The ROCKEYE II impact-sensing element is of particular interest because of its very high production rate and hence demonstrated reliability and low cost; some 18,000,000 units have been manufactured. Appendix I, excerpted from WS 4998 and WS 4999 (Weapon Specification sections of the Purchase Description), describes some of the special test equipment, procedures, and requirements for its quality control and acceptance which are indicative of its properties. The specified minimum electrical output is 7500 ergs (0.75 millijoule) when its Mk 95 Mod 0 stab detonator is fired.

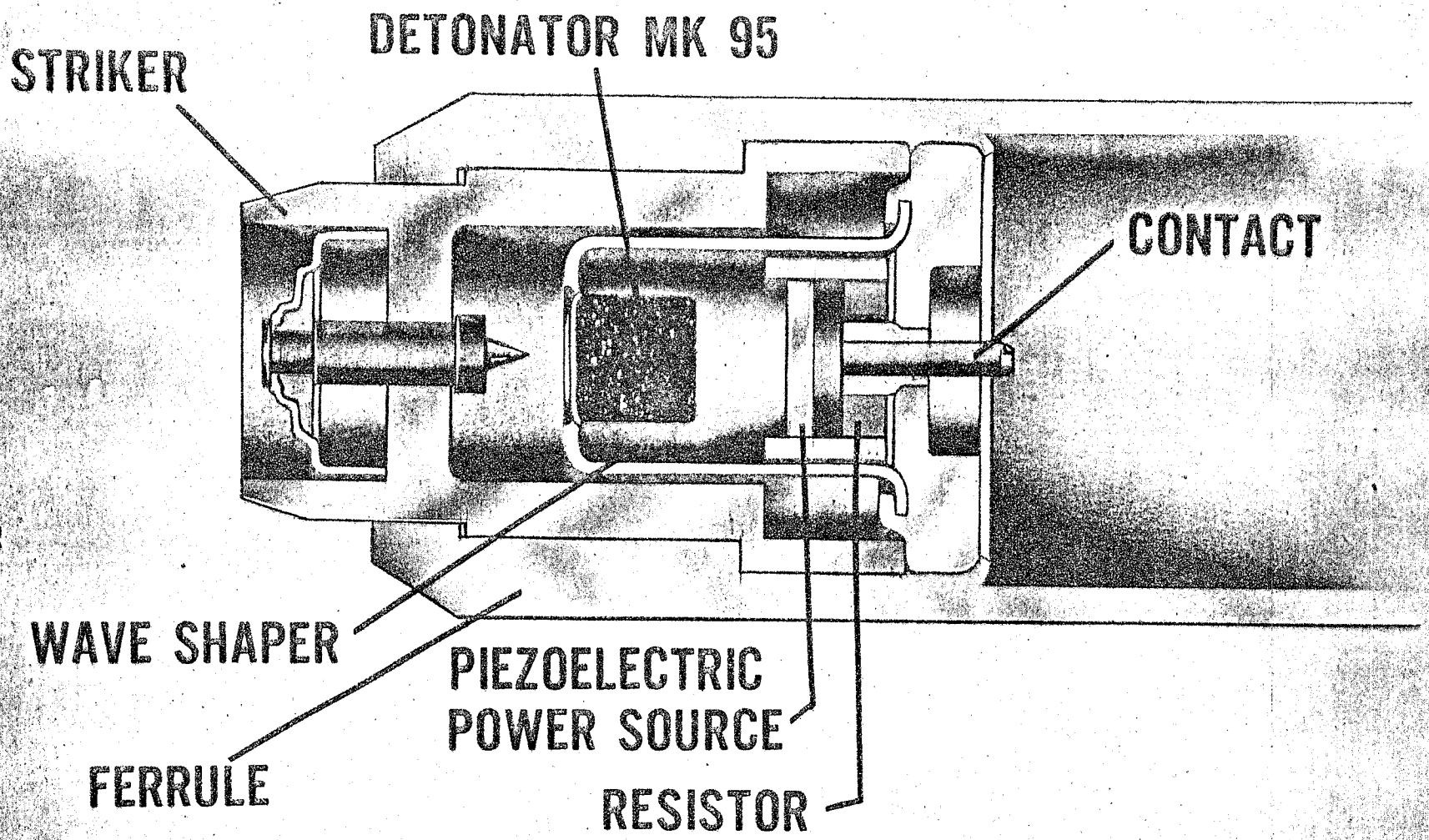

FIGURE 24. IMPACT SENSING ELEMENT ASSEMBLY FOR FUZE, BOMB, FMU-74/B

Despite the large number of destructive tests which must be made to verify quality in production and acceptance of such a one-shot item, manufacture by highly automated tooling has maintained production cost at a low level. Figure 25, the work sheet used in 1964 to predict costs for 2,000,000 units at an assumed production rate of 100,000 per month, estimated a unit cost of $1.23 (including assembly but not cost of the government-furnished Mk 95 detonator).* Despite inflation, actual costs in 1970-72 were approximately 35% lower than this.

Piezo-Element Properties - The piezo-element output is of relatively high voltage (250 volts)and current in a typical low-resistance output circuit is about 35 amperes, but the pulse is of very short (10^{-7} seconds) duration. It is thus large enough to be reliably distinguished from noise in any reasonably well shielded circuit. In weapon applications, the pulse is used to fire an electric primer not more than a few feet from the power source, and no particular transmission problems have resulted. In the hotbox detector on-car communication application, signal transmission was tested over a 25-foot link, as discussed in the section of this report dealing with system tests, and attenuation was significant.

Parallel connection of several crystal power sources has been widely used in weapon applications and poses no problem; the output pulse from one source does not damage others in any way.

The resistor shown across the output (500,000 $\pm$ 250,000 ohms) of the element has been typical of most applications. It is intended to avoid any possibility of developing or retaining a charge on the crystal in handling, assembling or connecting it in a fuze with explosive elements and thus eliminate a possible hazard in manufacturing operations. A further cost saving in the ROCKEYE II element was made recently by eliminating the resistor; extensive tests showed that no conceivable assembly operation (including oversimulations such as crushing the crystal in a vise) generated a charge of any significance in comparison to the minimum firing level of any electro-explosive

*Mk 95 cost $.09 in current production; reliability 99.94% on 19,900 tests.

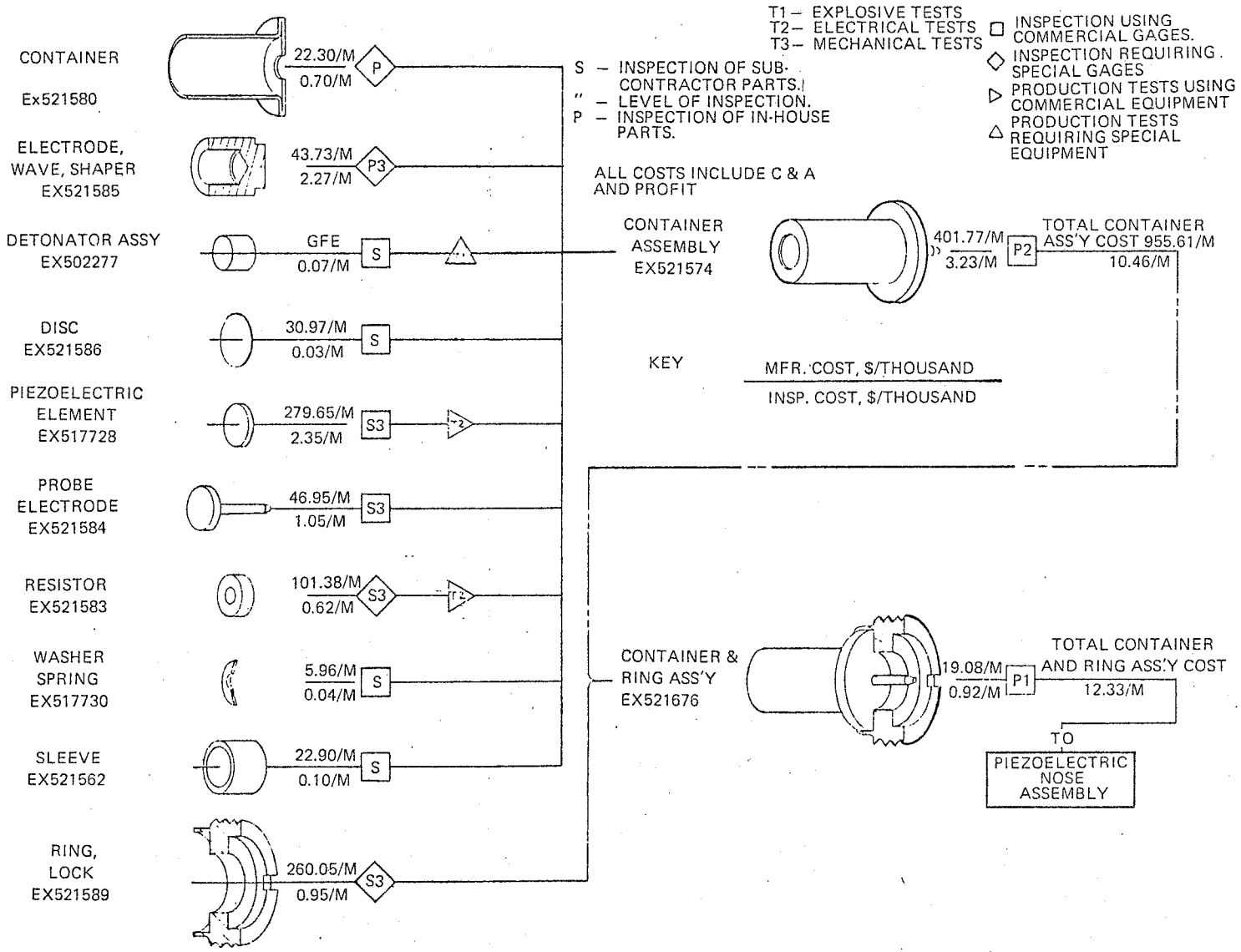

FIGURE 25. 1964 COST ESTIMATE WORK SHEET – ROCKEYE II PIEZO ELEMENT.

element involved. As discussed in connection with hotbox detector system design recommendations below, system checkout considerations would probably make it worthwhile to retain the resistor in this application.

Ruggedness and life have been amply demonstrated in several applications. The ROCKEYE II element has passed MIL-STD-331 jolt, jumble, temperature and humidity, vibration, salt spray and drop tests.

Thermal Battery - As an on-demand, short-term, high-current electrical power source, the thermal battery has developed into an extremely reliable and rugged unit with an essentially unlimited shelf life. The principle was reduced to practice in the late 1940's under Army contract. A variety of designs tailored to specific weapon applications has been developed by the Services since that time. They have been manufactured to detailed design specifications by at least three different contractors.

"Power" units, generating current for up to several minutes after activation, have typically been developed for nuclear weapon applications and produced in small quantities at relatively high unit prices. "Pulse" batteries, producing large currents within a fraction of a section for applications where no more than a few seconds' output is needed, however, can be produced in quantity at a unit price less than one dollar, and hence warrant consideration for this application.

Principle of Operation - Figure 26 is an X-ray of a typical thermal battery. A percussion primer (or an "electric match" if electrical initiation is required) produces flame which ignites layers of pyrotechnic material within the wafer-type cells. Burning of this material produces sufficient heat to melt the electrolyte, a salt such as lithium/potassium chloride which melts at temperatures of 500°F or higher.

Once the electrolyte is melted and its ions released, normal electro-chemical action generates voltage until the active materials

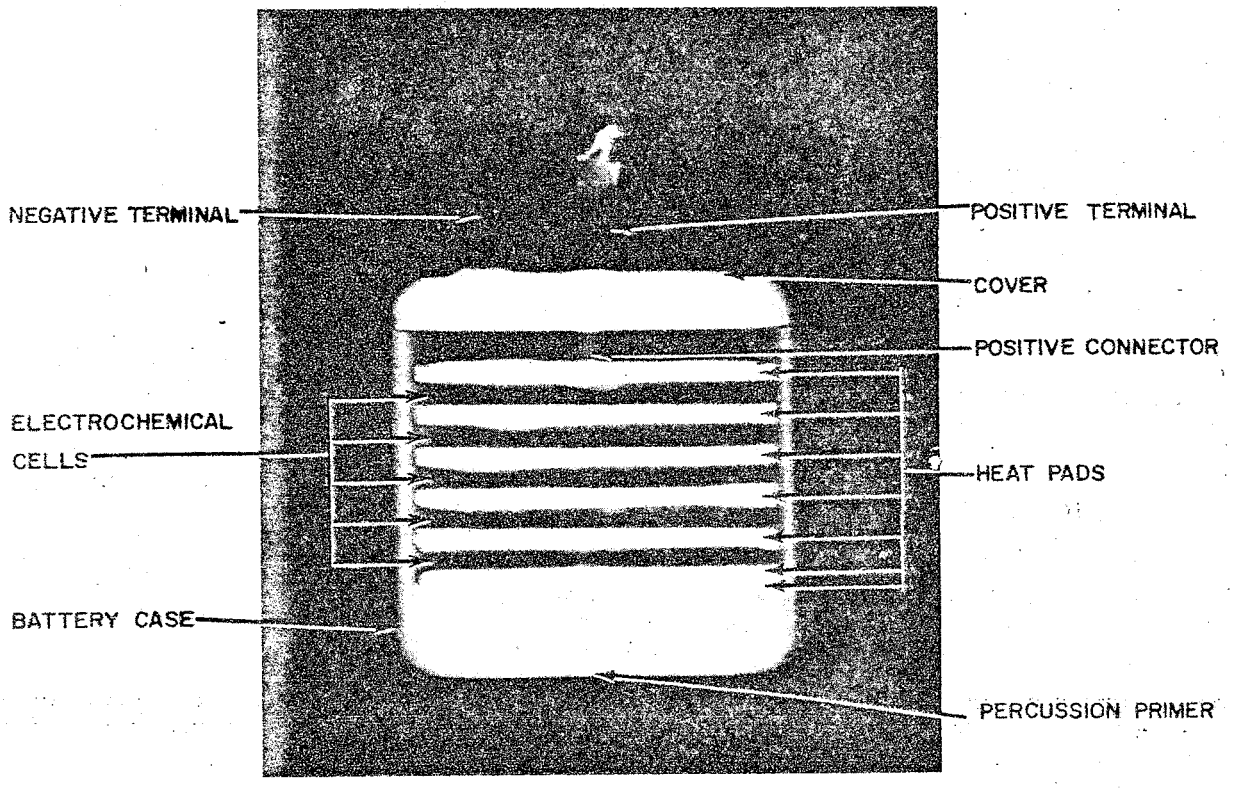

FIGURE 26. Thermal Battery Mark 73 Mod 0

are depleted or cooling refreezes the electrolyte. Power cells have appropriate thermal insulation for the required life; pulse batteries need only sufficient insulation to keep case temperature at an acceptable temperature.

Environmental Characteristics - Prior to activation, all components of the battery are solid and it is practically indestructible. Development of thermal batteries by NOL in recent years has been directed primarily at ways, such as the inclusion of clays, for immobilizing the melted electrolyte so that high levels of acceleration and shock such as in spinning projectiles do not affect electrical output.

Because of its high operating temperature, the thermal battery output is virtually unaffected by ambient temperature and a full-power -65 to +160°F requirement can be met without difficulty.

Shelf life is virtually unlimited but is dependent upon maintenance of a hermetic seal against moisture. Hence all batteries suitable for the sensor application must in practice be solder-sealed, with glass output terminal feed-throughs. It has been practical to use chemical systems in thermal batteries in which no measurable deterioration occurs at continuous storage temperatures up to at least 160°F. The Navy Mk 60 pulse battery has completed 14 years of a surveillance program in which samplings of units stored at uncontrolled temperature are withdrawn and fired. No deterioration in performance has occurred to date and it is planned that samples will continue to be fired for another six years. The Mk 60 has the same electro-chemical and mechanical sealing system as the Mk 73.

Sensor Application - Figure 27 shows the Nitinol hotbox sensor with thermal pulse battery output. The battery shown is basically of the Navy Mk 73 Mod 0 configuration, 0.7-inch diameter x 0.7-inch long, which produces 5 amperes at 5 volts (25 watts) within 0.5 second of actuation.

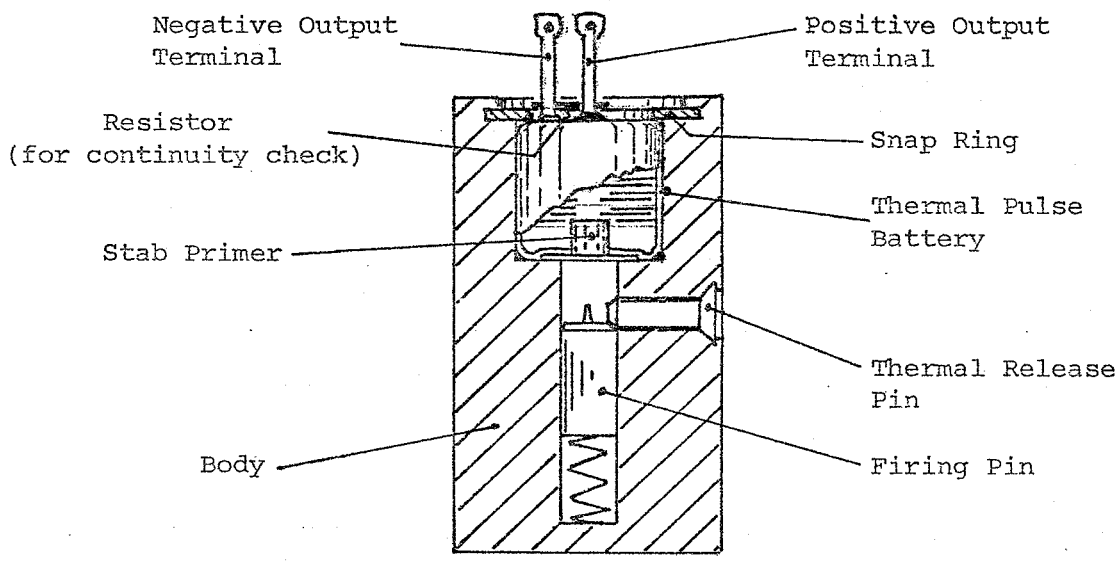

FIGURE 27. THERMAL SENSOR-THERMAL BATTERY OUTPUT

The Mk 73 (as do most other pulse batteries) uses a percussion primer (M42G) which is fired by impact of a blunt (round end) firing pin. All-fire minimum energy is 24 in.-oz. The percussion primer is not pierced by the firing pin or the subsequent ignition of its charge, so no combustion products are emitted and its seal is not broken. In the hotbox sensor application, these considerations are not important and a more sensitive stab primer such as the Mk 158 (firing energy similar to the Mk 95 Mod 0 used in the piezo-output sensor) could be substituted.

Appendix J lists pulse battery characteristics considered feasible for the thermal sensor application on the basis of NOL experience.

Hard Wire On-Car Interconnection Link - The design, installation and maintenance of an electrically-interconnected sensor system for the standard freight car, while by no means approaching the state of the art technically in any respect, is a radical change since there is no wiring whatsoever on the vast majority of existing cars. Relatively complex passenger car and mechanical refrigerator electrical systems are common, but extremely low hardware, installation and maintenance cost considerations are relatively less significant in these applications. Only a few items (such as deceleration control or wheel-slip sensor connections to passenger car and locomotive axles) are physically similar in location. Hence, the data base for design and cost estimates is limited.

Military Systems Analog - Some similarities in function, requirements and severity of environment exist in the wiring for the Navy electric fuzing function control system for externally-carried aircraft ordnance. Extensive service experience with this relatively simple yet troublesome installation clearly indicates that:

a. Connectors, especially those which are disconnected and reconnected in the field, are the greatest source of unreliability in the entire system.

b. Electrical continuity checks of the entire system are essential to the establishment and maintenance of high reliability.

c. "Murphy-proof" design is important; if anything can possibly be connected wrong, it will be.

Schematic Design - Figure 28 is a conceptual design schematic for the basic hotbox or hotbox/local derailment detector system, based on the above considerations. It is a two-wire, floating (ungrounded) system in which one armored harness is provided for each end of the car. The one extra connection this requires (compared to a single harness for the eight sensors) is considered well justified by (1) greater flexibility (and consequent smaller variety and inventory of cable types) in accommodating to various lengths and types of car, and (2) capability for reliably detecting one or more faulty individual sensor connections using 5 to 10% tolerance resistors and the simplest of test gear.*

Resistance figures given in Figure 28 are examples only and not necessarily those that would be chosen by a more thorough analysis. The system illustrated uses the piezo-crystal power source and low-energy (500 to 2000-erg wire bridge) explosive driver compatible with it. With the high-current pulse thermal battery as a power source and a one-ampere one-watt explosive element, some of the precautions against unintended initiation could be simplified or eliminated and a conventional ohmmeter test set circuit would be suitable.

Physical Design - The physical arrangement of the wiring could have a major effect upon its reliability and as well as upon system installation costs and life cycle maintenance costs of the car. A first-cut example is given in Figure 29.

*Reliably detecting one open sensor circuit of eight in parallel, on the other hand, cannot be assured with 1% resistors.

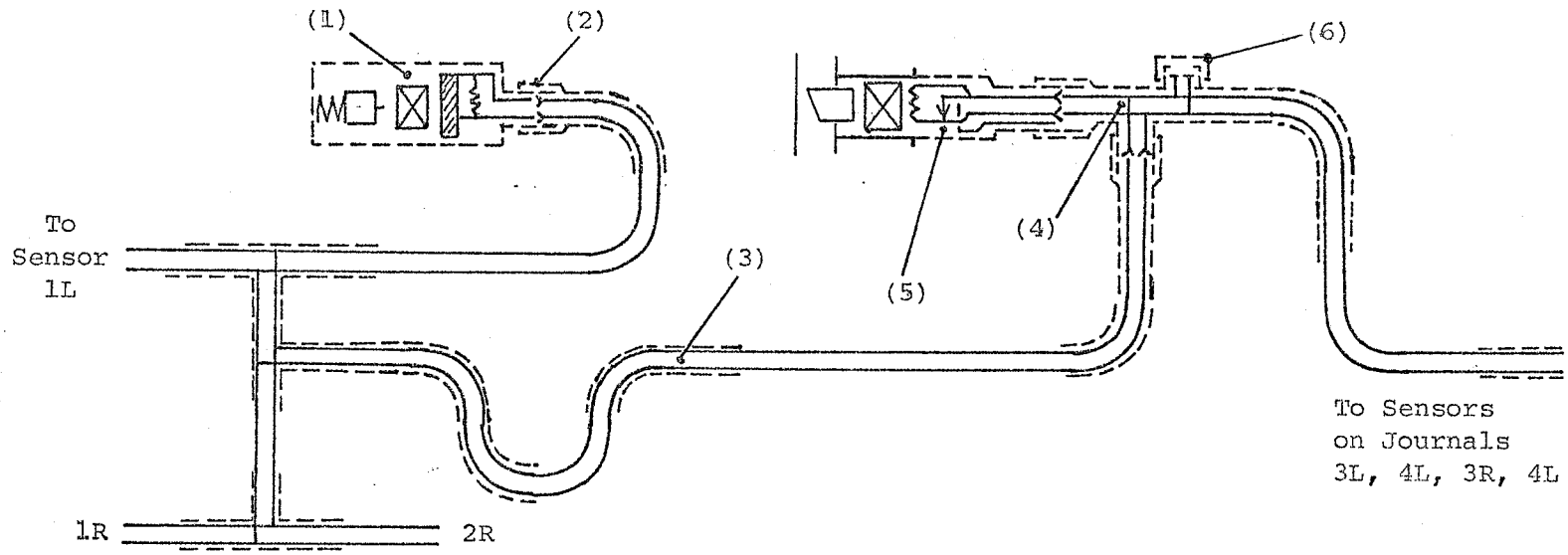

(1) Piezo crystal sensor output from sensor on journal 2L
(Z = approximately 200KΩ ; 50KΩ ± 10% shunt for continuity check)
(2) Lock-wired connector to sensor (on journal adapter)
(3) "B-End" armored harness, factory assembled } Four sensors = 11.3 to 13.8KΩ
} Three sensors = 15.0K or higher
(4) Master connector on "A-End" harness
(5) Brake pipe vent actuator fitting-EED bridge wire shorted until connector in place
(6) Unique system-test connector (capped) - Reads bridge wire resistance on special low-current tester when system complete

FIGURE 28. SCHEMATIC OF ELECTRIC ON-CAR COMMUNICATION LINK

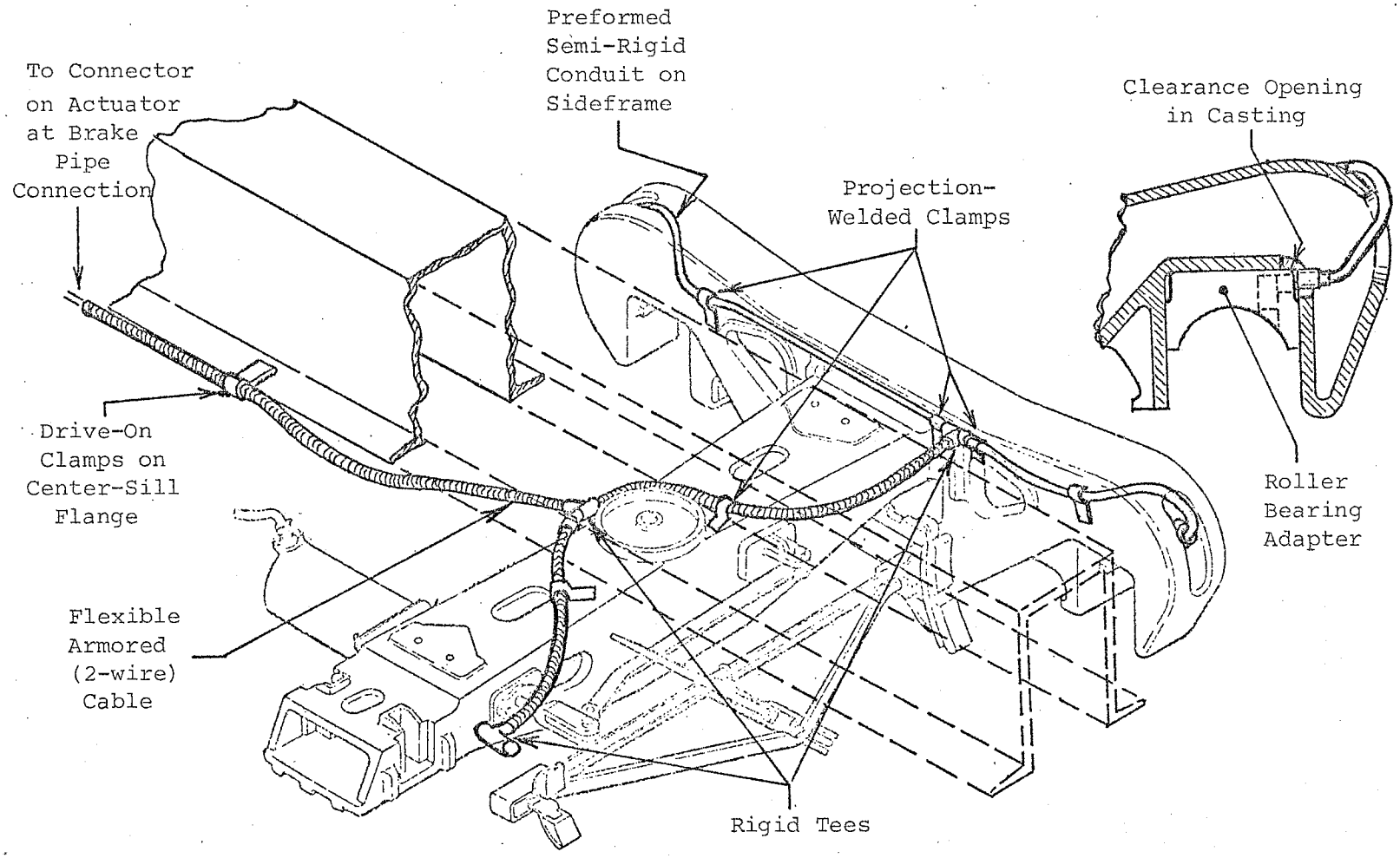

FIGURE 29. ELECTRIC ON-CAR COMMUNICATION LINK-ARRANGEMENT

The harness for one end of the car is treated essentially as part of the truck for maintenance purposes--more or less equivalent to the truck brake rigging. That is, when the truck is to be separated from the car body for any reason, the cable is disconnected at the brake valve, unclamped from the underframe and temporarily wrapped around the bolster.

One convenient and physically well-protected connection to the sensors themselves is illustrated in Figure 29. It involves cutting or coring an opening in the inner side of the outboard jaw of the side-frame pedestal, opposite the existing cored opening. This does not appear to be a critically stressed area, but a stress analysis would be desirable to confirm this. All other machining for sensor mounting would be in the bearing adapter.

Explosive System

In recent years the use of linear-propagating high-explosive cord as a communication link has found fairly extensive acceptance in military systems. Where input and output can consist of the initiation of an explosive element, these self-contained systems eliminate auxiliary power sources and conversions from one form of energy to another. Hence they may be logistically attractive, particularly when total system requirements including test gear to maintain a given level of reliability are considered. Reliability is typically excellent.

Mild Detonating Cord - Key to these systems was the development of the explosive cord, usually known as mild detonating cord (MDC), or mild detonating fuse (MDF) which can be placed in a jacket containing the lateral explosive effects. The assembly is known as confined detonating cord (CDC). The explosive element is a high-explosive cord similar to the detonating cord ("quarry cord," Primacord, etc.) used for many years to cut structural members,

interconnect multiple explosive charges and perform other "military engineer" functions. In contrast to the 40 grains per foot (and up) charge in detonating cord, however, the charge in MDC is typically 2½ grains per foot. Propagation is still by detonation wave (rather than by burning as in a pyrotechnic (time fuse) element and is about 22,000 ft/sec. Explosives which have been used include PETN, RDX, DIPAM and HNS, the latter two being relatively new NOL explosives with notable stability and reliability at elevated (350°F and higher) temperatures.

Appendix K presents some technical background on MDC/CDC components pertinent to this application.

Comparisons in Anti-Derailment Sensor Systems - As compared to the electrical systems for on-car interconnection, an MDF system has specific advantages and disadvantages which can be summarized as follows.

Advantages

a. The explosive element constitutes a "single conductor" link, not subject to short circuits or grounds and hence of high reliability in situations where severe, unpredictable mechanical abuse of the circuitry is to be expected.

b. MDF has been demonstrated to be essentially immune to spurious initiation by electro-magnetic radiation, electrostatic effects, fire, fragment impact, crushing and moisture.

c. Input and output elements involve only detonation transfer, are relatively inexpensive, do not involve close physical tolerances, and can simplify design of other components by penetrating hermetically sealed or pressure-tight barriers if necessary.

Disadvantages

a. When a circuit is initiated at any input point, the entire network functions and must be replaced in the refurbishing process.

b. Reliability under conditions involving continual flexing over a period of years remains to be fully established.

c. Circuit continuity cannot be checked electrically unless a monitor circuit is added.

d. The fact that explosive is involved results in some restrictions, precautions and impediments to acceptance, both rational and irrational, to its use in a civilian context.

e. The MDC itself is relatively expensive.

Discussion - In other factors the MDC system is comparable to the electric alternatives. Reliability and safety over the required range of temperature is satisfactory and adequate specifications and quality control procedures for controlling its manufacture and acceptance exist. It may be concluded that an MDC system can be developed which will meet all requirements in this application. Cost (including the cost of refurbishing systems actuated in service) therefore becomes the governing factor, and is discussed below in the overall system cost/benefit assessment.

System Tests

Piezo-Crystal System - To determine the feasibility of the piezo crystal/explosive actuator system for the anti-derailment sensor application, a series of tests was conducted in which the signal was transmitted over a distance of 25 feet, corresponding approximately to the distance from an end axle to the air brake valve on a 50-foot car. Tests are summarized in Table 9.

Output Calibration - Crystal output in the various fuzing applications is measured by feeding the output pulse into a resistive heater element, simulating the electro-explosive device (EED) ignition wire. Heating of this element is measured by electricity generated in a vacuum thermocouple which in turn is discharged into a ballistic galvanometer whose deflection can be calibrated in terms of the energy (ergs) dissipated in the heater element from the pulse. As discussed

TABLE 9. PIEZO CRYSTAL ON-CAR COMMUNICATION LINK TESTS

Test No.	Length of Leads (feet)	Test Set-Up No.*	Output Element Type	Nominal Firing Energy (ergs)	Output Element Action
1	25	1	Mk 15-0 (Bellows Motor)	14,400	No Fire
2	25	2	Thermocouple/Galvanometer		>15,000 ergs
3	5	1	Mk 15-0	14,400	No Fire
4	25	3	Mk 15-0	14,400	No Fire
5		1	Mk 20-0 (Bellows Motor)	5,000	No Fire
6		1	Mk 20-0	5,000	No Fire
7		4	Mk 20-0	5,000	No Fire
8		5	Mk 20-0	5,000	No Fire
9		6	Mk 20-0	5,000	No Fire
10		1	M6 (Bellows Motor)	600	Fire
11		1	M6	600	Fire
12		1	M6	600	Fire
13		1	M6	600	Fire
14		1	Mk 96 Detonator	2,000	Fire

*See Appendix L for diagram of test circuit.

in Appendix L, tests of the ROCKEYE II (Fuzing System Mk 1 Mod 0) piezo element initiated by the Nitinol sensor firing pin indicated an output into the vacuum thermocouple through 25-foot leads in excess of 15,000 ergs (Table 9, Test No. 2), although its acceptance specification requirement (Appendix I) is 7500 ergs.

Explosive Initiation Results - Accordingly, Mk 15 and Mk 20 bellows motors (Appendix M) were used as operability indicators of 14,400 and 5000 erg all-fire sensitivities, respectively. As indicated in Table 9, these did not fire with either 25-foot or 5-foot leads when connected directly to the piezo element, although the output calibration indicated that they should.

Impedance Matching - As detailed in Appendix L, tests 4, 5 and 6 were made to explore the effects of better impedance matching in the circuit, since the piezo pulse duration (10^{-7} second) represents a frequency at which transmission line effects can be significant. These techniques were not successful at the 5000-erg level.

Sensitive EED Tests - The M6 carbon-bridge bellows motor (600 ergs all-fire) was successfully initiated, as was the Mk 96 wire-bridge (2000 ergs all-fire) detonator used in the ROCKEYE II system. The carbon bridge initiator (as in the M6 bellows motor) is considered unsuitable for use in applications where it would be handled in a separate EED or connected up under other than carefully-controlled, factory conditions. Because of its great electrical sensitivity, it is likely to be actuated spuriously by stray currents or static electricity; its relatively high and highly variable resistance (750 to 15,000 ohms) makes its response to such unintended sources of electricity difficult to predict or control. As in the case of the anti-derailment sensor application, this is usually not a matter of hazard in handling the EED itself, since its output is self-contained, but rather a contributor to system unreliability through premature actuation.

Mk 96 Detonator Characteristics - The Mk 96 detonator (Figure 30) is of wire-bridge type (2.0 to 5.0 ohm resistance) and correspondingly more predictable response. It has a glass seal, providing for essentially unlimited life under uncontrolled ambient environmental conditions, and has demonstrated very high reliability (59 failures to fire in acceptance-test firing of 81,681 units for an observed reliability of 99.93%) despite its moderate cost (45¢).

In the ROCKEYE II application, the Mk 96 detonator is attached to a button-type electric shorting assembly (Figure 30) which maintains a short circuit across its bridge wire until the fuze is fully armed, thus protecting it from all likely sources of spurious firing throughout its assembly, storage and delivery history.

For the output element in an on-car communication system, the combination of the bridge wire explosive initiation system of the Mk 96 detonator and its shorting assembly into a bellows motor (or the actuator/diaphragm cutter of Figure 33) as the active element in the brake line vent assembly would make a reliable system, suitable for use where installation and unit replacement under car-shop conditions is required.

Continuity Check - Resistance of circuits containing EED's of the sensitivity of the Mk 96 cannot be measured with ordinary ohmmeters or multi-testers without the possibility of initiation. It would therefore be necessary to provide special, low-current test gear to monitor system continuity and isolation and verify EED bridge wire status, with a unique test connector (Figure 28) to reduce the likelihood of using the wrong instrument.

Thermal Battery System - No system tests of the thermal battery/high energy actuator system were made, since the long duration pulse from the battery will fire the one amp-one watt actuator (1 ohm) reliably provided that resistance of the rest of the circuit does not exceed one ohm. Ordinary ohmmeters can be used for continuity checks with this system--a definite plus.

TYPE-ELECTRIC
STATUS-SERVICE
ASS'Y DWG. NO.-2426850, LD 549467
SPECIFICATION-WS 4996
TYPICAL USE-FUZING SYSTEM, BOMB, MK 1 MOD 0

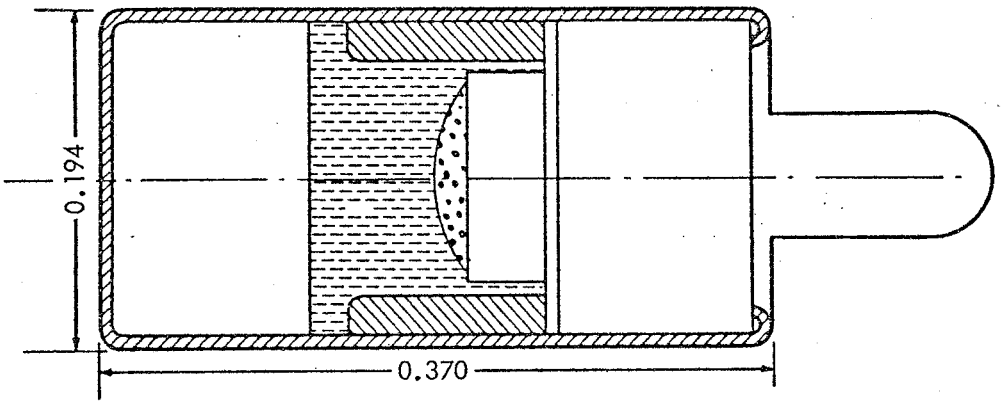

MATERIALS

	WT. (MG)	PRESSURE (PSI)
EXPLOSIVE-COLLOIDAL LEAD AZIDE		
LEAD AZIDE	5.0	BUTTER
PETN	65.0	CONSOLIDATED BY IGNITION ASSEMBLY
CUP -STRIP STEEL	65.0	3000

PERFORMANCE

INPUT SPEC.

ALL-FIRE-0.25 μf AT 40 V.

FIRING TIME-20 μSEC

OUTPUT-INDENTATION IN STEEL: MIN. OF 0.010 IN. FOR EACH AND AN AVG. OF 0.014 IN.

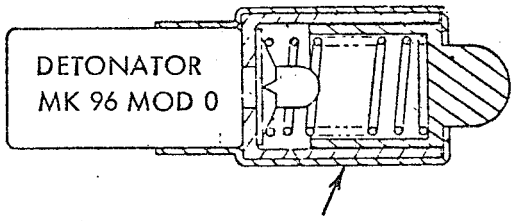

ELECTRIC SHORTING ASSEMBLY
USED IN FUZING SYSTEM, BOMB, MK 1 MOD 0

FIGURE 30. MK 96 MOD 0, DETONATOR

Discussion of System Test Results - The vacuum thermocouple/ ballistic galvanometer instrumentation has satisfactorily correlated with EED bridge wire characteristics in determining the suitability of piezo crystal output in fuzing applications, usually with short leads (one foot or less) between crystal and detonator. The five-to-one discrepancy in effective output between instrument and EED in these tests is surprising; pending a proven analysis of the transient circuit effects which dominate in this situation, demonstration by test of the reliability of a complete, armored one-car (eight sensor) system must be a first order of business when contemplating use of the piezo crystal system with its cost advantages.

There is no technical reason preventing explosive elements of the electrical sensitivity of the Mk 96 detonator from being used with completely satisfactory safety and reliability under railroad conditions. However, it appears that the high-current, pulse battery system may be preferable in practice because of lower sensitivity to factors affecting circuit impedance.

INTER-CAR COMMUNICATION LINK

Freight trains are electrically conductive end-to-end (except when the coupler slack is running in or out) but very thoroughly shorted to ground at all wheels. It is possible that an electrically-controlled braking system may eventually be developed and standardized (primarily to eliminate the effects of slow, serial pneumatic brake application and release in causing violent slack action), in which case a hard-wire communication link would be available for sensor system use. Such a development for general service is unlikely in the near future.

For potential low-cost inter-car communication under present circumstances, the continuous air brake pipe and radio-frequency, optical (visual), and (conceptually) direct atmosphere (acoustic or olfactory) transmission capabilities exist.

Use of the brake pipe as a communication link is discussed in the next section of this report in connection with its capabilities to effect direct action (stopping the train) upon sensor activation. The often effective olfactory detection of hotboxes from the rear platform of the caboose has been eliminated in recent years by the overpowering aroma from composition brake shoes. Optical possibilities suffer from both weather and line-of-sight limitations; a reasonably efficient acoustic system is a difficult concept to envision.

Radio-Frequency Link

Since most territories and freight trains are now equipped for end-to-end radio (VHF) communication, a radio link from the individual car to the locomotive and/or caboose requires only an encoder/transmitter on the car and decoding adapter on the existing receiver, which already must be maintained and can supply power, amplification and an alerting output signal. Encoder/transmitter cost, including the on-car power supply, to achieve the necessary car-to-crew member range (about two miles) with an acceptable false-alarm rate (one per 1000 train-hours

or less--see p. 100) is the dominant consideration in system feasibility from an economic standpoint; from a phase-in standpoint (p. 9), it is a Category C system, requiring specially-equipped locomotives to be effective on any particular route.

Power/Power Supply - Assuming that any useful encoder/transmitter will be solid state with very short warm-up and stabilization time, a short-discharge-time power supply with indefinitely long shelf life which is turned on by sensor actuation will not degrade system response time and is therefore to be preferred; the pulse thermal battery (p. 79 and Appendix J) meets these requirements very well and at acceptable cost in this one-per-car application. It is also fully compatible with the environment.

Radiated power at VHF frequencies necessary to achieve a reliable range of two miles under all weather conditions, assuming an efficient, rigid transmitting antenna mounted on the side of the car body, is estimated at one to ten watts. Input power to achieve this for the short signal duration required is no problem for the thermal battery.

Transmission Modes - Any simple AM monopulse system must be ruled out because of an excessive false-alarm rate. In particular, lightning at a great distance would inevitably actuate the decoder.

An FM system with an appropriate, sufficiently distinctive code modulation on a crystal-controlled (assigned) sensor frequency could achieve a suitable false-alarm rate. Such a transmitter, ruggedized for the severe sensor environment, is estimated to cost in the vicinity of $50 in high production quantities.

"Noiseless Button Bomb" rf Link - The Noiseless Button Bomb (NBB*) uses a system of minimal complexity to providing an identifiable

*So named because it resembles an earlier acoustic intrusion detection system in which the sound of a tiny bomblet (which explodes when stepped on) activates a radio relay link similar to the ARFBUOY.

signal over a short distance. It was developed by the Army (Electronics Command) in the 1967-70 era for the DOD Defense Communications Planning Group (DCPG) as a personnel intrusion-detection system compatible with an area surveillance system for use in Southeast Asia. The NBB T-1151(V)/GSQ transmitter units and the associated Automatic Radio-Frequency Buoy (ARFBUOY) receiver RT-991(XE-2)/GSQ are described in Appendix N . By looking for three different frequencies successively in three time "windows," the ARFBUOY rejects most noise while accepting signals from a transmitter requiring only very loosely-controlled characteristics.

NBB False-Alarm Rate - The communication link of the NBB/ARFBUOY system exhibited an extremely low false-alarm rate--only one being experienced in a 12-month period of test under field conditions; this was attributed to lightning. It also gave no false alarms in an extended period of test in the extremely "noisy" electromagnetic environment of an electronic equipment test range; under jamming conditions, the circuit will reject signals rather than false alarm. Despite its simplicity and low cost, the system is much more effective in rejecting false signals than are commercially-available rf garage-door controls.

NBB Costs - NBB's were produced under conditions of great urgency (sole-source) in quantities of 100,000 at a unit cost of approximately $8, including the mercury-cell battery, manual arm, and motion-sensitive trigger switches. Army cost estimates for higher-volume competitive procurement are in the $5 range. ARFBUOY cost included a relatively complex coded identification output and relay transmitter along with the decoder/receiver, so its unit price of $1200 is only a ceiling indication of the probable cost of an adapter for receiving NBB-type signals on VHF train radio equipment. Since an NBB serves to verify that the receiver adapter is functioning, cost of service test gear would be nominal.

Discussion - Military sensor technology has developed relatively inexpensive transmitters whose performance indicates the feasibility of an rf link for the anti-derailment sensor system. However, use of a separate, special rf link is simply not competitive with use of the existing air brake system, once it was established that the desired service brake application could be achieved when initiated from any point in the train and that sensor actuation could be deduced from air flow indications available in the engine cab. Therefore, no further investigation or test of the radio link was carried out.

PRIMARY OUTPUT

General Considerations

Types of Output - The primary output of the anti-derailment sensor system may conceptually be either an alarm or an automatic, direct action appropriate to the nature of the emergency. Every action taken as a result of a trouble indication, whether via employee action or automatically, will have an associated cost--typically (as a minimum) the direct cost of stopping, inspecting and restarting/reaccelerating the train. This is a matter of perhaps $5 to $100 per occurrence if a single train is involved; it could be much higher in circumstances involving such matters as congested traffic, statutory penalties for blocking grade crossings, or inappropriateness of the response of the trouble indication. Figure 31 shows the relationship between this cost, false-alarm rate, and total false alarm cost.

False-Alarm Rates - The system false-alarm rate will be the sum of the sensor, communication link and output indicator rates, so these relationships can be used to judge each of these subsystems. A total annual false-alarm cost of $1 million would represent approximately 3% of the 1970 damage to railroad property due to derailments attributed to defects in or failures of equipment. By estimate of the Bureau of Safety, FRA, this would equate to somewhat less than 1% of the total costs (including lading loss and damage, damage to private property, and wreck clearing costs) associated with such accidents. No sensor system can prevent all of these derailments; however, a postulated $1 million per annum cost would amount to 1-1/2 to 2-1/2% of the total tangible cost of hotbox derailments.

Sensor/Actuator - The sensor and on-car communication and actuator subsystems must be judged by their per car mile rate (Figure 31a);

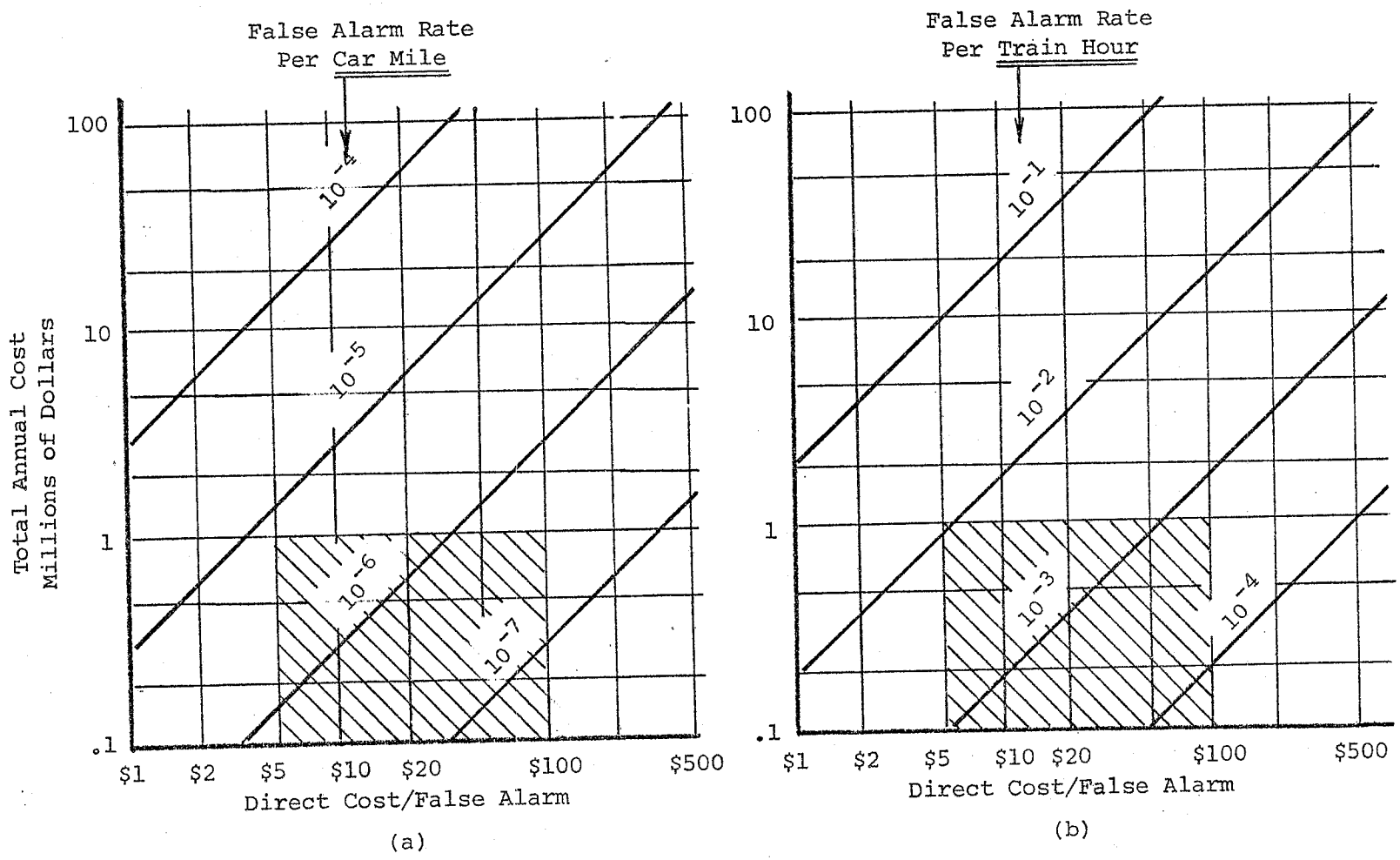

$$30 \times 10^{9} \text{ Car-Miles/Year} \left\{ \begin{array}{l} 70 \text{ Cars/Train} \\ 20 \text{ Miles/Train-Hour} \end{array} \right\} = 2 \times 10^{7} \text{ Train Hours/Year}$$

FIGURE 31. FALSE ALARM RATE/COST RELATIONSHIPS

if an overall false-alarm cost of $1 million is to be achieved, the rate must be in the range of one per 1,000,000 to one per 5,000,000 car miles and an even lower rate is highly desirable.

Communication Link - Similarly, the inter-car communication link including its output indicator or actuator must demonstrate a rate of one per 1000 to one per 5000 train hours or better (Figure 31b).

Train Radio Alarm

One inter-car communication system, discussed previously (p. 95), would use an rf link to transmit the alarm signal to those points (locomotive, caboose or wayside) already equipped with train radio (VHF) equipment. A decoder (a receiver-adapter utilizing the power supply, controls the speaker of the existing system) would sound an alarm upon receipt of a coded rf signal from any on-car sensor/transmitter within range.

This man-in-the-loop system would have the advantages of using the judgment and discretion of the crew member in taking action appropriate to the circumstances. In practice, the appropriate action, in the absence of any more specific indication of the nature, location and urgency of the trouble, will almost always consist of braking the train to a halt for inspection, and discretion will be limited to selection of a brake application suitable for train consist, speed and track alignment.

Disadvantages of this system (assuming a satisfactory false-alarm rate is achieved) include the less-than-perfect reliability associated with the continual alertness required of the crew, the uncertainty as to which train is involved in any situation in which two trains or more are within range, and the associated time delays in response.

Direct Air Brake Application

A set of sensors feeding via an on-car communication network to a single actuator initiating a local application of the existing air brake system provides automatic response with no additional gear required for communication throughout the train. The "false-alarm rate" for this communication/actuation system is not zero, but it is ipso facto acceptable because it is already present.

Brake Response - Two questions must be addressed: first, can the brakes be applied automatically, from any location in the train, in such a manner that the hazard to the train, on the average, is markedly less than from the trouble being detected? Second, can the automatic brake application by the sensor be detected at the locomotive and proper action be taken (automatically or manually) to avoid nullifying the braking action and/or pulling the train in two by the effects of the locomotive air compressors and tractive force?

Brake Tests - To provide data on these questions, the Westinghouse Air Brake Company (WABCO) conducted a short series of tests with FRA and NOL observers on 20 July 1972. The tests used WABCO's 150-car rack of ABD (current standard) brake equipment at its Wilmerding, Pennsylvania, plant. Details of these tests are given in Appendix O.

Brake Test Results - Actuation - The results of the tests and indications drawn from them may be summarized as follows:

a. Opening an orifice of 11/32-inch diameter at the brake valve of any car in the train will result in quick-service application of the brakes throughout the train, except for a few cars (six or less) at the extreme head-end of the train when the application is from the rear of the train.

b. An application with this orifice generally produces a full-service application except when near the locomotive, in which case continued charging of the brake pipe results in less than full-service brake cylinder pressure throughout the train.

c. Since a 5/32-inch orifice produced no brake actuation and a 29/64-inch orifice produced an emergency application, it appears that a practicable tolerance on the orifice area to produce a reliable service application exists.

Brake Test Results - Actuation Detection - Flow-meter readings indicate that the equipment (Brake Valve Charging Cut-Off Flow Detector System) which has been developed to cut off the air compressors on remote-control "slave" locomotive units during braking and allow the brake application signal in the brake pipe to pass through them to the rest of the train (and which also places their throttles at idle) can be used to perform automatically a similar action on the road locomotive. This would result in full-service application of the brakes throughout the train and eliminate or greatly reduce the likelihood of developing forces in the train sufficient to pull it in two before coming to a stop.

Flow Detector Alternatives - Alternatively, the flow indicator can be equipped to sound an alarm when an automatic application has taken place. The engineman can then cut power and handle the brake valve manually to minimize stresses in the train.

As a second alternative, the flow meter indication and the effect of the automatic brake application on the train motion provide sufficient information to the engineman to allow him to recognize the situation and take appropriate throttle and brake action.

Brake Application Hardware - Figure 32 is a drawing of the AAR Standard Dirt Collector and Cut-Out Cock* fitting which connects the

*AAR Interchange Rule 3(a)(10).

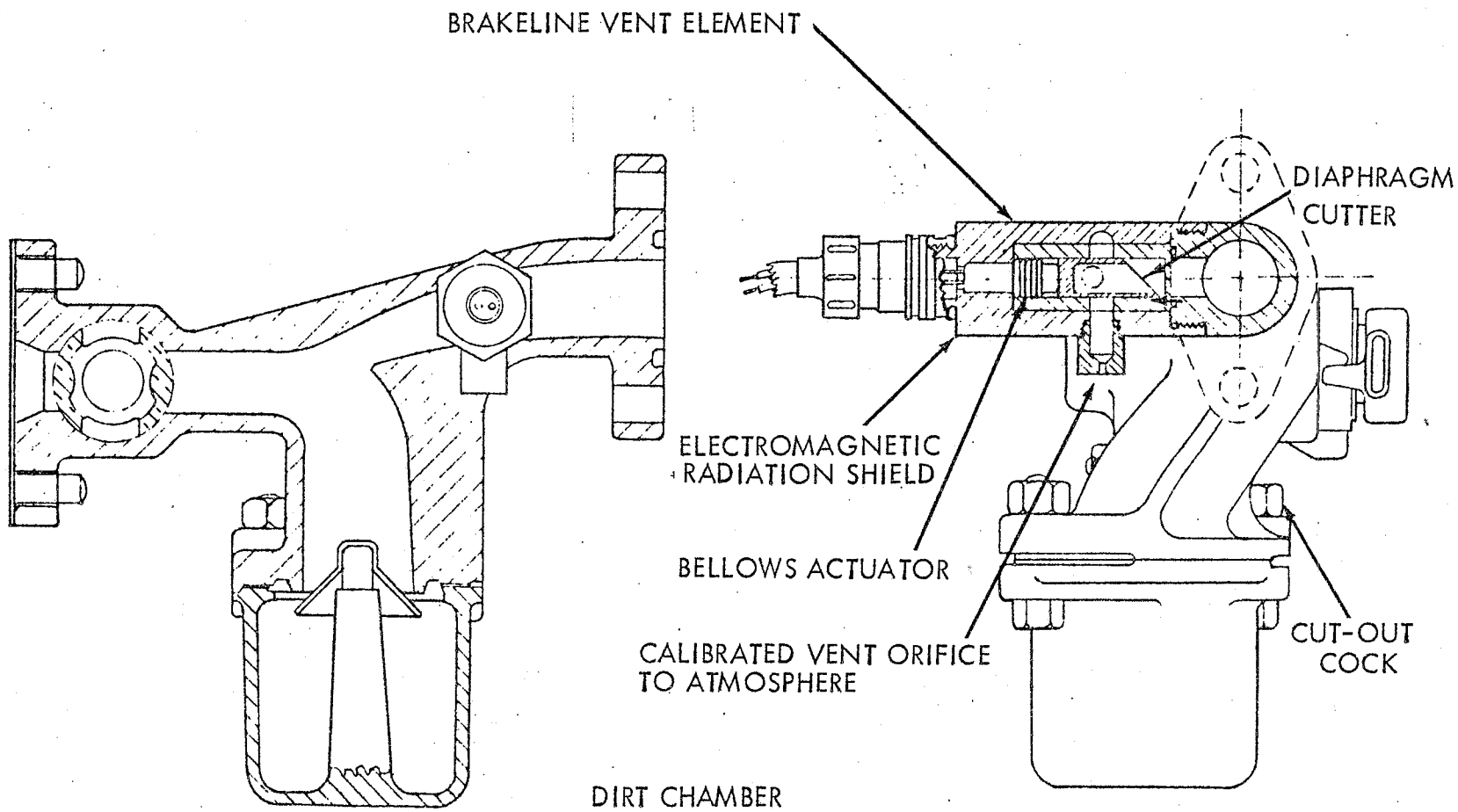

FIGURE 32. BRAKE LINE VENT ELEMENT ON AAR DIRT COLLECTOR/CUT-OUT COCK FITTING

brake pipe on each car to the brake valve pipe bracket, modified to show conceptually how the sensor-controlled actuator can be integrated into the brake system using a single rugged fitting directly adaptable to a large majority of freight cars (essentially, all except sliding-sill cars) without introducing extra leakage points.

Bellows Actuator Design - The brake line vent element shown in Figure 32 uses a wire-bridge bellows actuator to push a beveled diaphragm cutter through an integral metal diaphragm. The cutter opens a hole considerably larger than the calibrated orifice used to meter the rate at which train line pressure is vented. Thus the exact size or smoothness of the pierced hole is not important to correct brake actuation.

Bellows actuator characteristics are presented in Appendix M and in sections of this report discussing the on-car communication link and thermal sensor tests. The bellows actuator is an item widely used in critical ordnance applications and its quality is ordinarily controlled to provide a high degree of assurance against failure to contain the gases from its burned propellant. It thus represents no fire hazard and is relatively safe to handle and install, even under conditions where electromagnetic radiation, static electricity or other possible causes of spurious actuation cannot be entirely eliminated.

Piston Actuator Design - Another variety of diaphragm cutter which in large-scale production might be somewhat more economical is the piston actuator type with separable explosive element. Figure 33 is a recent NOL piston-actuated valve design suitable for this purpose. The O-ring and swaged-metal retainer provide an extremely high degree of assurance against gas leakage or valve cutter retraction after actuation, features not particularly important in the brake line vent element.

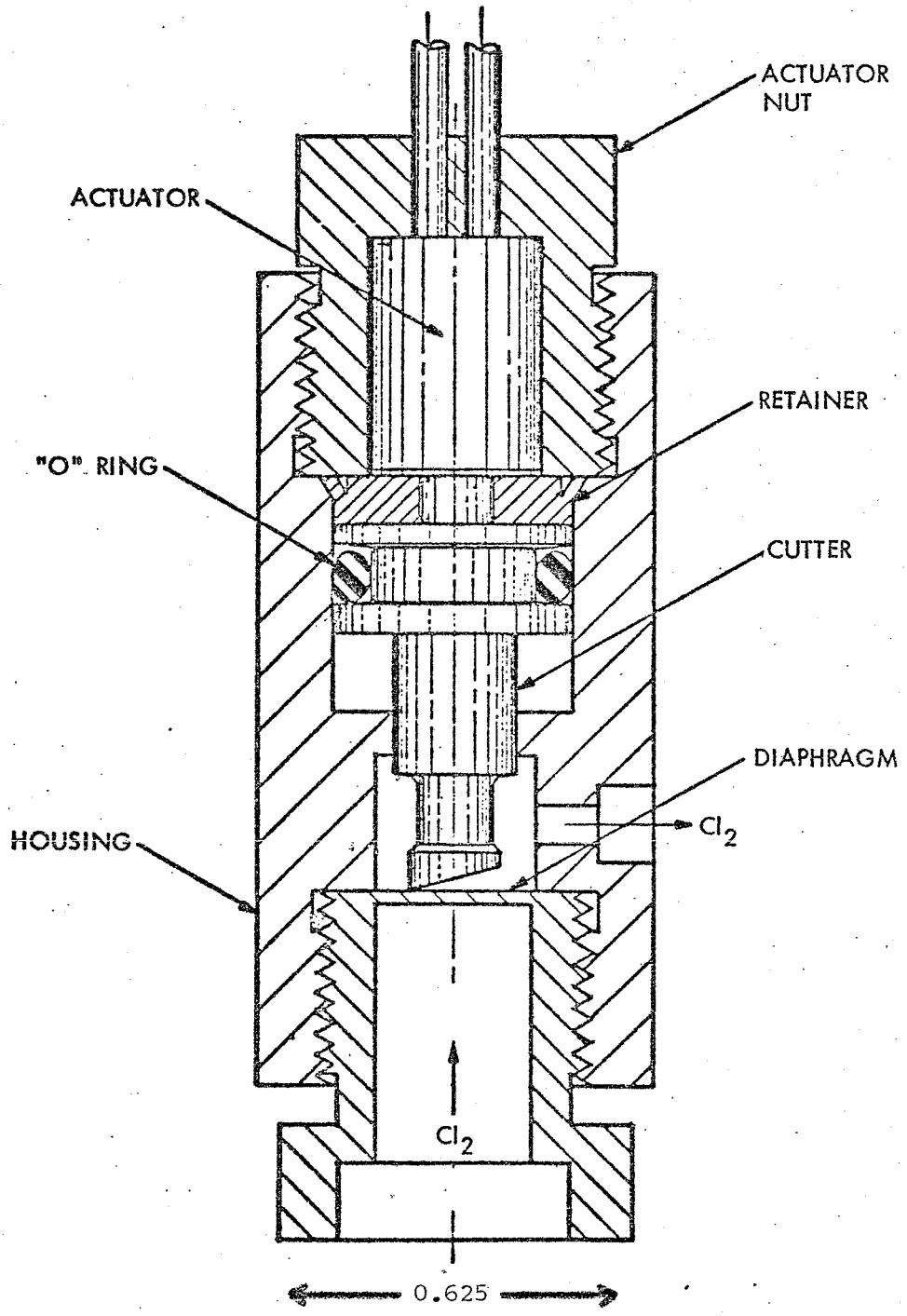

FIGURE 33. DIAPHRAGM CUTTER

This miniature unit, intended for smaller flow rates at pressures in the 1000 psi range, is described more fully in Appendix P and Report 72-244 (reference (h)). The diaphragm tested is 0.020 stainless steel. The same actuator would be suitable for use with a thinner diaphragm and larger cutter to exceed the 11/32-inch equivalent orifice diameter required in the air brake vent element.

Firing-Energy Considerations - The power available to actuate the brake pipe vent element is discussed in the section of this report covering system design and system test results. Some standard EED's are built to operate reliably at input energies of about 600 ergs (60 microjoules) and above. Such items are subject to spurious firing from:

a. Static electricity (a person can typically generate an electrostatic charge of up to 10,000 volts and 160,000 ergs under particularly dry conditions and this can sometimes be transferred efficiently enough to cause firing of an EED despite the impedance mismatch).

b. Inadvertent or unauthorized use of standard test equipment (multimeters are quite capable of firing sensitive detonators on some of their "resistance" settings).

c. Energy picked up from rf fields in the vicinity of electrical equipment or transmitters.*

In the case of self-contained units such as the vent element, this is only a reliability problem** once the unit is properly assembled at the point of manufacture. In installing, replacing,

*HERO (Hazards of Radiation to Ordnance) or RADHAZ (hazards to personnel from high-power transmitters) are terms often used in this connection.

**In military applications, additional safety elements such as the interrupted explosive train are always used in connection with EED's so that inadvertent actuation cannot cause detonation of a hazardous size.

checking out or connecting the sensor network to an element of such sensitivity, some precautions such as restricting welding equipment in the vicinity might be necessary to insure that it was not unintentionally fired. These might hinder its acceptance in general service or cause increased costs.

One Amp-One Watt - To provide a better margin of safety against spurious initiation in the intense rf environment typical of military locations, MIL-I-23659 (reference (i)) establishes standards of one ampere and one watt* as the maximum sensitivity acceptable in any case where these devices must be installed in the field or used in other than completely shielded, self-contained systems. Other precautions such as shorted firing leads and restrictions on rf field strength must still be observed to provide acceptable safety.

Commercial electric blasting caps typically have an equivalent sensitivity of about 0.4 to 0.5 amp no-fire. The one amp-one watt limit is probably more than required for this railroad application, but observing it should essentially eliminate any restrictions in use and provide for maintenance of reliability without such feasible but extra-cost design features as electrical connectors which maintain a short-circuited condition until after mating.

Appendix P contains design and test details of the NOL piston actuator and the one amp-one watt actuator driving its cutter. Derived from the production Detonator Mk 101, this hermetically sealed actuator also has demonstrated outstanding the shelf life and reliability characteristics which are essential for unrestricted railroad service in this adverse location.

*Dissipation of one watt in and passage of one amp through initiating element for five minutes without ignition of explosive elements.

This type of EED is inherently relatively expensive (more than two dollars each) in comparison to commercial blasting-cap-type plastic-seal units, whose life in such service may be satisfactory but cannot be predicted with high confidence on the basis of available data.

Cost - Price estimates for the brake line vent element assume that in production the dirt collection and cut-out cock casting would be modified to incorporate the body of the vent element, although retrofit of existing castings should be possible within the same price range. Actuator interior parts would be standard and replaceable.

Action Following Actuation - The location in the branch pipe between brake pipe and brake valve beyond the cut-out cock permits setting out the affected car, or retaining it in the train with brake cut out if appropriate, subject to existing laws and regulations regarding required proportion of operable brakes. Thus no further spare parts or tools are required to permit the train to proceed as rapidly as permitted by the nature of the emergency causing the actuation.

TROUBLE LOCALIZATION

Each time the hotbox or incipient rock-off detector on a particular car has succeeded in its mission of stopping the train prior to derailment, rapid determination of the one potential offender in the train becomes the final essential function for a useful system.

General Considerations

Performance requirements and environmental conditions common to all system components have been set forth previously (p. 8 and 14). Additional specific requirements for the trouble localization subsystem are as follows:

a. Signal to persist long enough for train inspection by one crew member under somewhat adverse conditions--assumed to be 30 minutes.

b. Day and night indication, with no special receiver or monitor (brakeman's electric lantern may be assumed available).

c. Non-toxic, incapable of igniting flammable vapors.

d. False-alarm rate compatible with cost effectiveness of system (1×10^{-6} false alarms/per car mile or lower).

Specific Principles Considered

Sight, smell and sound are the senses most obviously applicable to rapid localization by inspection from one side of the train.

Sight - A non-pressurized aerosol bomb of yellow smoke charged and activated by compressed air bled from the train line by the brake pipe vent element of the sensor system should satisfy false-alarm rate and other considerations, with some experimentation to determine quantity/orifice size relationships to produce a visible signal for the desired period.

An alternative is an inflatable balloon (with relief valve) large enough to be seen from either side of the car by lantern light and tough enough to withstand the air velocity as the train comes to rest. Military experience indicates that reliable balloon performance (after collapsed stowage) of more than a few years in this uncontrolled environment can only be assured with high quality and relatively expensive material.

Smell - A small capsule of ethyl or butyl mercaptan, similarly pressurized and expelled at a metered rate, will produce a smell pungent enough to locate the general area of the actuation for an adequate period of time, except perhaps in the presence of a high wind.

Sound - The Westinghouse ABD test-rack air brake actuation tests (reported in Appendix O) in which opening of an 11/32-inch orifice in the train line at various points in a 150-car train produced a service brake application gave the following results:

	Brake Pipe Pressure 12 Minutes After Venting, psig	
Location of Venting	At Car No. 1	At Car No. 150
Rear of Locomotive	74	74
Rear of Car No. 50	77-3/4	42-1/2
Rear of Car No. 100	79	31
Rear of Car No. 150	79	25

These results indicate that considerable residual pressure will remain in the brake pipe (and therefore at the vent element) for a long time. Tests at NOL with a plain (no particular configuration) 11/32-inch diameter orifice at 20 psig produced such an intense sound as to indicate that the sensor vent element itself can provide an adequate localization signal.

The above rack tests were made with the locomotive compressor continuing to charge the brake pipe; train-handling considerations would dictate in most cases that brake pipe charging cease as soon as brake actuation is detected by the engineman (see p. 103) until the train comes to rest. It is unlikely that the combination of normal brake pipe leakage and the sensor vent would reduce the pressure so rapidly and completely as to prevent localizing the actuation; should this happen, recharging the brake pipe to release the brakes will again make the point of actuation detectable.

Discussion - It is concluded that the sound of the air exhaust inherent in the basic system is in itself an adequate trouble localization signal. Should any greater acoustic efficiency be needed, the addition of an inexpensive, rugged (probably integral) whistle to the vent element outlet is readily possible.

SYSTEM CONCEPTS, COSTS AND BENEFITS

Basic (Hotbox) Sensor System

Three variants of a basic system for the prevention of derailments caused by overheated journal bearings consist of the elements indicated by the (A) links in Figure 1. As discussed in previous sections of this report in connection with individual components, all three systems are considered potentially reliable, maintainable, and effective in the environment of unrestricted freight service.

Sensor Operating Sequence - Bearing temperature rise above approximately 250°F on any journal of any equipped car causes a Nitinol phase-change alloy element to trigger initiation of an explosive detonator. The resulting signal is transmitted by a wire or explosive link to an explosive actuator at the air brake valve on the individual car. This actuator opens an appropriate orifice in the train line, applying the train brakes in a full-service application and bringing it to a halt before axle failure from overheating is likely to occur. A loud whistle from the orifice, fed by the residual train line pressure, locates the offending car for the train crew; its brake valve cut-out cock is closed, brakes are released, and the car is set out to permit the train to proceed.

Cost Estimates -

Hardware Cost Comparisons - Table 10 gives per-car comparative full-scale-production cost estimates for the assembled hardware required for three system variants--(1) piezo crystal/low-energy actuator; (2) thermal battery/high-energy actuator; and (3) all-explosive (shielded mild detonating cord) on-car communication link.

The piezo-crystal system at $34 is estimated to be 10 to 15% lower in cost than the thermal battery system hardware ($39), although this

TABLE 10. HOTBOX SENSOR SYSTEM COMPARATIVE HARDWARE COST ESTIMATES

		System 1 Piezo Crystal/ Hard Wire/ Low Energy Act.		System 2 Thermal Battery Hard Wire/ High Energy Act.		System 3 All-Explosive (SMDC) Link	
Sensor Body	(8)	.25		.25		.25	
Thermal Unit	(8)	.15		.15		.15	
Stab Det	(8)	.15		.15		.15	
Piezo Element	(8)	.25	11.20	--	15.20	--	8.80
Pulse Battery	(8)	--		.75		--	
Transfer Elem.	(8)	--		--		.15	
Sensor Connector	(8)	.60		.60		.40	
2-Cond. Wire	(76 feet)	@ .07	5.32	@ .07	5.32	--	--
MDC	(61 feet)	--	--	--	--	@ .50	30.50
MDC - Flex	(15 feet)	--	--	--	--	@ .70	10.50
Transfer Jct Ftgs	(7)	--	--	--	--	.40	2.80
Armor	(61 feet)	@ .08	4.88	@ .08	4.88	@ .08	4.88
Armor - Flex	(15 feet)	@ .15	2.25	@ .15	2.25	@ .15	2.40
Armor Tees	(7)	.60	4.20	.60	4.20	.40	2.80
Output Expl Elem.	(1)	1.50	1.50	2.50	2.50	.40	.40
Shorting Fitting	(1)	.20	.20	--	--	--	--
Brake Vent Elem.	(1)	2.50	2.50	2.50	2.50	2.50	2.50
Connector/Test Plug		1.80	1.80	1.80	1.80	--	.40
Total, Per Car Set			$33.85		$38.65		$63.18
Service Test Equipment		$100 - 400		$20 - 40		None	
Refurbishment Hardware Cost (Per Actuation)		$1.40		$1.90		$63.18 (Approx. 10¢ per car year)	

difference may result as much from the larger production represented in its cost data base as from inherent cost factors.

The all-explosive system at $63 is significantly more expensive, and there is also less production cost experience available to establish accurately its probable cost in high production. Refurbishment cost is much higher, though at 10¢ per car-year (at present roller-bearing failure rates) this is not a major factor overall; the associated labor and car-ownership costs resulting from the more time-consuming refurbishment process are perhaps a more significant burden.

Installation Cost - With the individual sensors located in modified AAR standard roller bearing adapters (as in Figure 29) and the brake valve vent element threaded into or located in an integral cost protrusion on the standard dirt-collector/cut-out cock (as in Figure 32), installation costs should be moderate for the vast majority of car types and designs. The primary cost will be that of attaching the armored cabling to the truck and car structure; this should be about the same for the three systems considered.

Assuming reasonable ingenuity in quick-attach cabling design (as by the use of drive-on clamps like rail anchors to hold the cable to underframe members), an average per car installation cost of $15 to $50 appears attainable for new or existing cars.

Maintenance Cost - With military-quality components of this simplicity whose longevity and reliability have been established by a thorough engineering development and evaluation program taking advantage of analogous design experience, a reliable service life without routine maintenance equal to the 20-year car life (or time between complete car rebuilds) appears entirely feasible.

However, for the purposes of this study, a cost of $2 per car year was assessed, on the basis that an electrical continuity check would be made at the time of the 48-month air brake clean, oil, test and

stencil (COT&S) interval, and that an allowance of $8 (about 15% of the COT&S charge) should be well above actual cost for such a procedure, including incidental connector gasket seals and replacement of occasional physically damaged components.

Return on Investment - Figure 34 summarizes the potential cost saving and return on investment potential for the basic hotbox sensor system if installed on the entire fleet. At a "best estimate" installed cost of $75 per car, a saving of $60 million per year and an annual return of 43% on investment would result, assuming that the current rate of 500 hotbox derailments per year would otherwise continue.

In the event that advances in the understanding of bearing failures and more frequent and stringent bearing maintenance requirements should reduce the hotbox derailment rate to or toward the 100 per year minimum foreseen as ultimately possible, the savings and return would be lower, as indicated by the curves for 100 and 200 per year, but still significant.

Because of the great (10 to 1 or more) variation in annual mileage of different types of car in different services, equipping only high-mileage cars (unit-train, piggyback) with sensors could accomplish a major part of the cost saving at an even higher rate of return. This assumes, of course, that the degree of standardization and the total quantity of sensors installed is great enough to drive unit production cost down near the estimated level for equipping the entire fleet.

Figure 35 is the actual unit cost versus production experience (1967 through 1972) for the NOL-developed ROCKEYE II bomblet fuzing system.* The Fuzing System Mk 1 Mod 0 should be generally comparable in this respect to hardware involved in the hotbox sensor system,

*Subsequent production (1972-1973), of about six million units, including a second production source, has reduced the price to $3.19, of which $.74 is the ISE (Figure 25) cost.

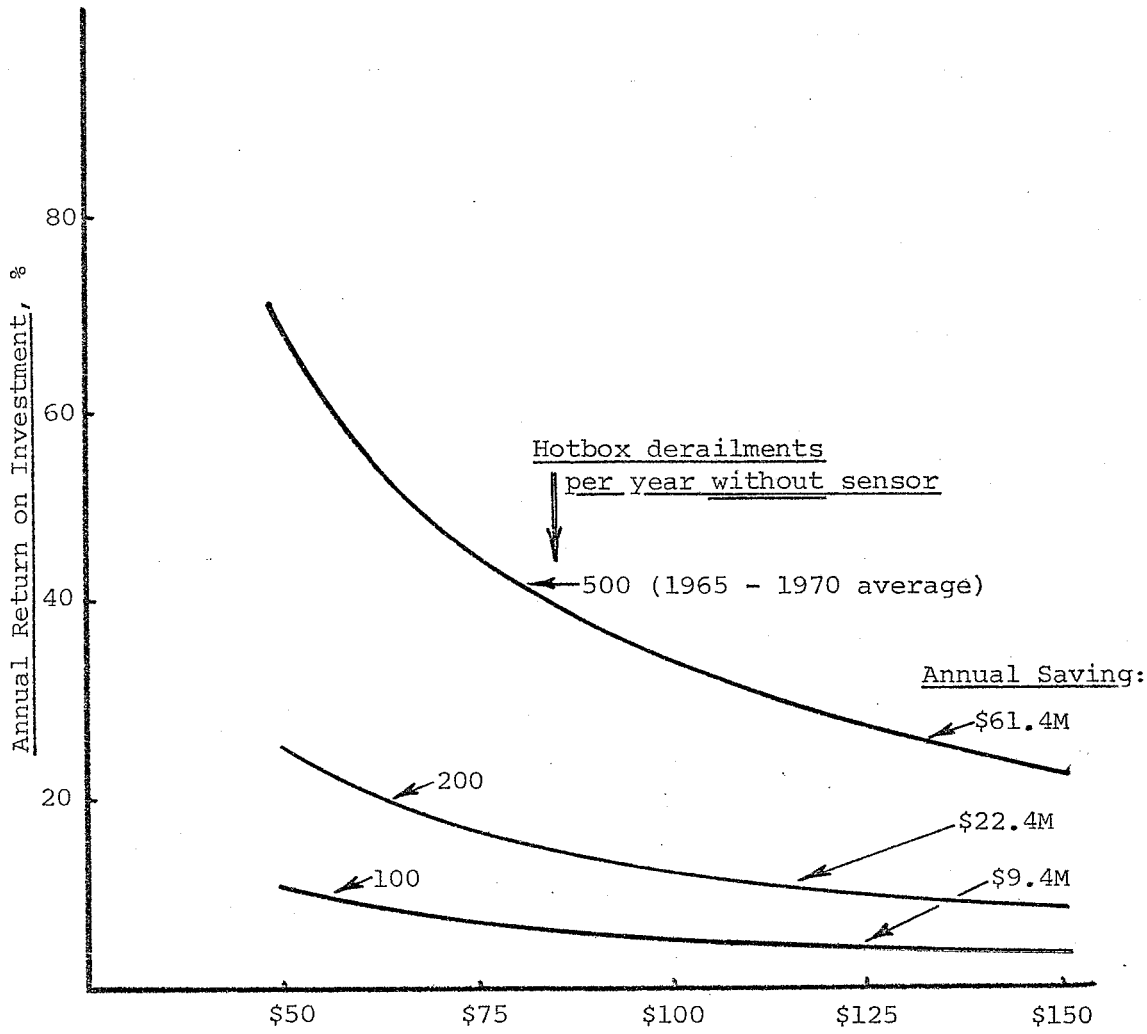

$2 per car-year sensor maintenance

$130,000 average total cost per hotbox derailment

FIGURE 34. RETURN ON INVESTMENT FOR HOTBOX SENSOR SYSTEM

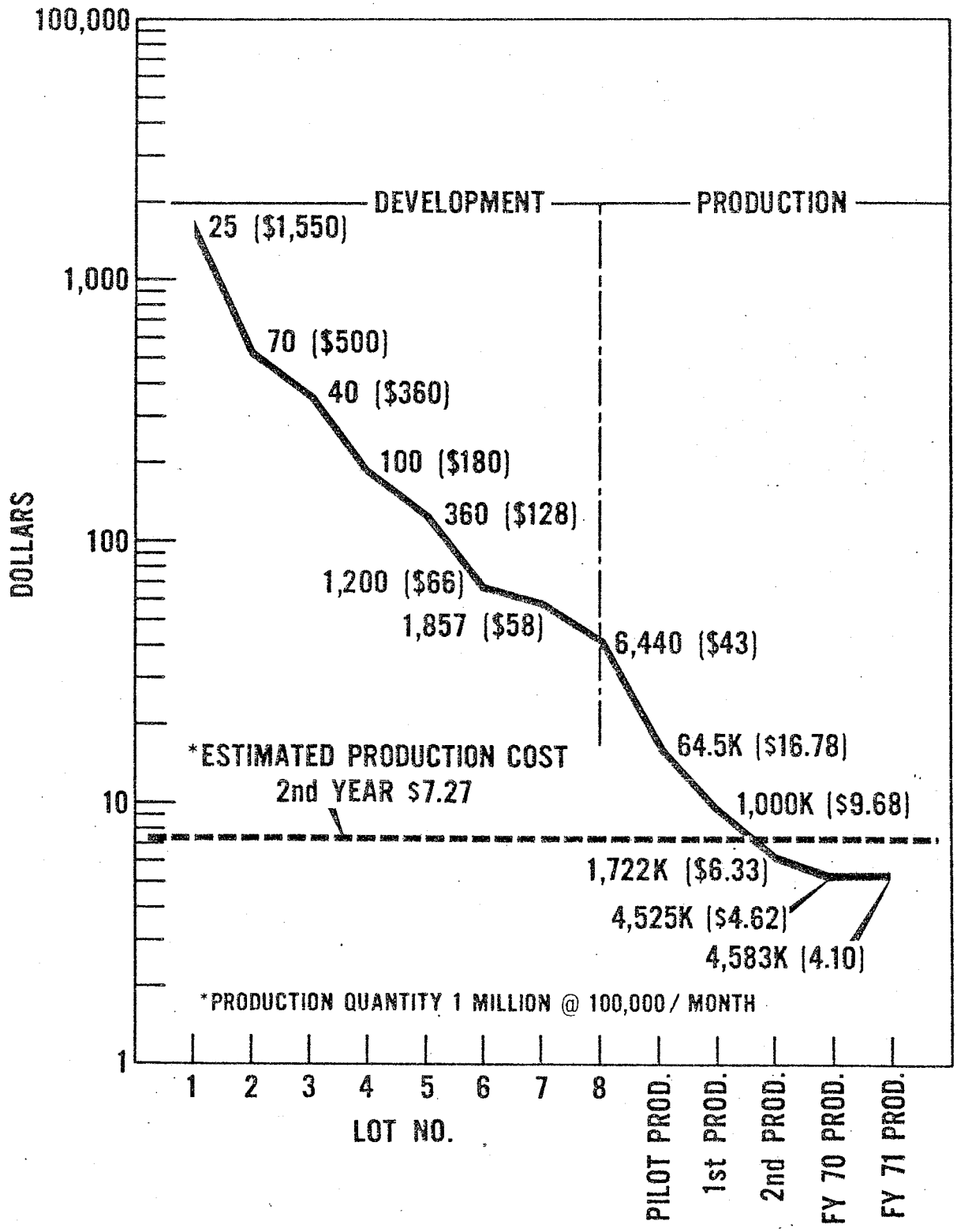

FIGURE 35. UNIT COST HISTORY FOR FUZING SYSTEM, BOMB MK 1 MOD 0 (INCLUDES G & A & PROFIT)

since it includes both stab and electric detonator installations, a piezo-crystal element, and requirements for extensive in-process testing and quality control procedures, although it is mechanically much more complex. It appears from experience in this and other similar programs, that the knee in the cost curve occurs in the vicinity of 2 to 5,000,000 units (250 to 625,000 car sets).

The relatively high unit costs for the small (25 to 6400) quantities of development fuzes ($1550 down to $43) indicate the value of using available high-production, proven-in components wherever possible if such a system is to be tested in service on a limited scale before making a development/production commitment for fleet-wide application.

Resonant Rock-Off Detector System

An integrating hydraulic-pump sensor feeding into the on-car brake application subsystem of the basic hotbox sensor system is shown by the (B) links in Figure 1 and pictured in Figure 19 (p. 62).

Sensor Operating Sequence - Excessive rocking-mode oscillations, measured in the suspension of one truck, initiate a signal in a wire or explosive communication link as they build up toward a dangerous level. The output of the link actuates an explosive element at the air brake valve on the individual car, applying its brakes immediately in full service; the resulting forces between bolster and sideframe tend to damp the oscillation in that car, and the serial brake application throughout the train slows it to a point where the rocking motion is no longer in resonance with the periodic disturbing forces from the track, preventing the rock-off derailment. The sensors are applied only to those cars whose characteristics (truck center spacing, center of gravity, etc.) are such as to make them rock-off susceptible.

Cost Estimates - The incremental cost for installing the rock-off detector system has not been estimated as closely as for the basic system because of the greater uncertainties in its design, as discussed in preceding sections covering the rock-off phenomenon and its detection. For the purpose of estimating the return from pursuing further the rock-off detector system, a cost of $200 per car, installed, appears reasonable on the basis of comparability to some automatic slack-adjuster units.

Because of the moving parts involved, maintenance for this system will not be negligible. If it is assumed that on an annual basis it is equivalent to half of the air brake COT&S expense per year, a cost of $7.50 per year for mechanical work (parts replacement) and a total of $10 per year (including fluid replenishment) appears reasonable.

Return on Investment - Figure 36 summarizes the cost saving/return on investment potential for the incremental cost of the rock-off detector. Since the number of rock-off susceptible cars responsible for the bulk of the 70 rock-off derailments (1970) is not readily available, this has been used as the independent variable.

At a best-estimate number of 50,000 susceptible cars to be equipped, and penalizing the system for the uncertainties involved in whether or not brake application will in fact forestall rock-off by assuming only 50% effectiveness, a 22½% predicted return results.

Phase-In Considerations - These sensors would constitute a Category B system (see p. 9), producing savings proportional to the number of susceptible cars so equipped wherever they run under conditions tending to produce rock-off. They would require minimal advisory notification to train crews, limited spare part and special maintenance gear, and would ultimately tend to reduce special operating problems with the susceptible cars.

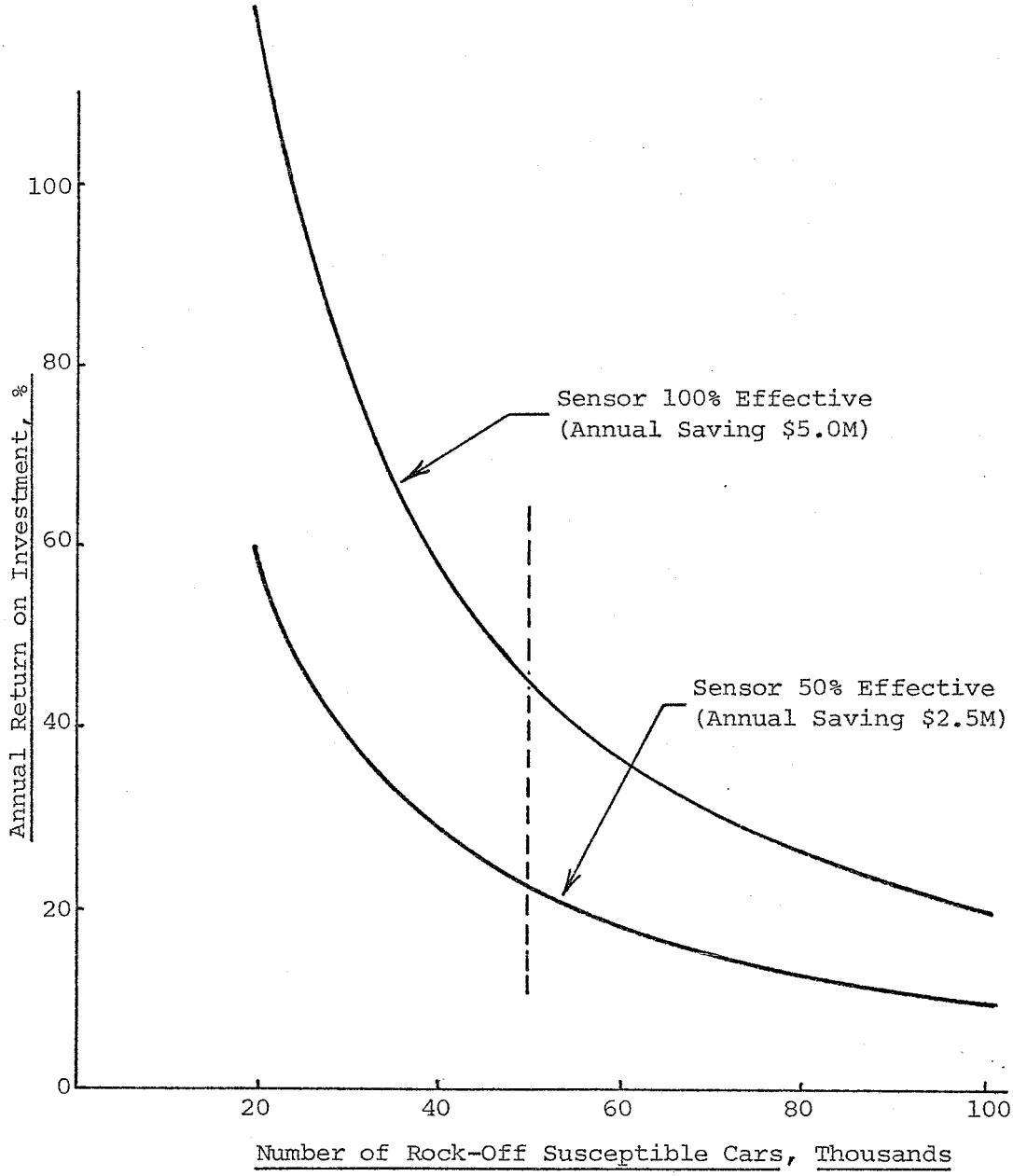

70 rock-off derailments per year (1970)

$70,000 average total cost per derailment

Sensor incremental cost $200 per car (installed)

Sensor maintenance cost $10 per car year

FIGURE 36. RETURN ON INCREMENTAL INVESTMENT FOR RESONANT ROCK-OFF DETECTOR SYSTEM

Local Derailment Detector System

A discriminating spring-mass sensor combined with the thermal sensor on the journal boxes, which detects roadbed impact in any local derailment and triggers the basic hotbox sensor system, is shown by the (C) links in Figure 1. The sensor is shown in Figure 22, p. 68.

Sensor Operating Sequence - When an axle of an equipped car derails in any manner which results in its wheels dropping from the rail head, the distinctive acceleration and velocity-change of its ensuing impact with the roadbed actuates a mechanical trigger which withdraws the hotbox sensor thermal pin, releasing a firing pin which activates a piezo crystal or thermal battery. The electrical output, via an on-car communication link, actuates a self-contained explosive element on its brake pipe, initiating a full service air brake application throughout the train. In those cases where the train would otherwise proceed until a general derailment ensues (often at some turnout or grade crossing in a more populated area), the timely stopping of the train may greatly mitigate the damage resulting from the initial incident.

Cost Estimates - The local derailment sensor, if a single value for its sensitivity can be found which takes care of both loaded and empty cars of all common load-to-tare ratios, can be a very simple addition to the basic sensor system; a best-guess median estimate of the unit add-on cost (4 or 8 per car) is 75¢ in large-scale production, based on cost experience with fuze parts of similar nature and complexity. Should it be necessary and desired to make an empty-load adjustable unit, costs would be much higher; $20 per car (4 units) is considered a reasonable goal.

Maintenance for the add-on parts of the non-adjustable unit should be negligible.

Return on Investment - The big uncertainty is the proportion of derailments in which delayed pile-up is a factor in their destructiveness and cost. To determine whether further development of the local derailment sensor is financially promising despite the uncertainties involved, the analysis of Figure 37 very conservatively postulates a sensor which is effective only on loaded cars and that in those accidents where delayed derailment is a factor the prompt application of the brakes can save only half the average cost of all miscellaneous equipment--and roadway--caused derailments. If one derailment in twenty is of this type, a 75¢ (add-on) sensor on each journal would result in a 28% return.

Phase-In-Considerations - This is a Category B system (see p. 9), producing savings proportional to the proportion of cars equipped wherever they run and requiring minimal special notification, spare parts positioning or changes in operating and maintenance practices.

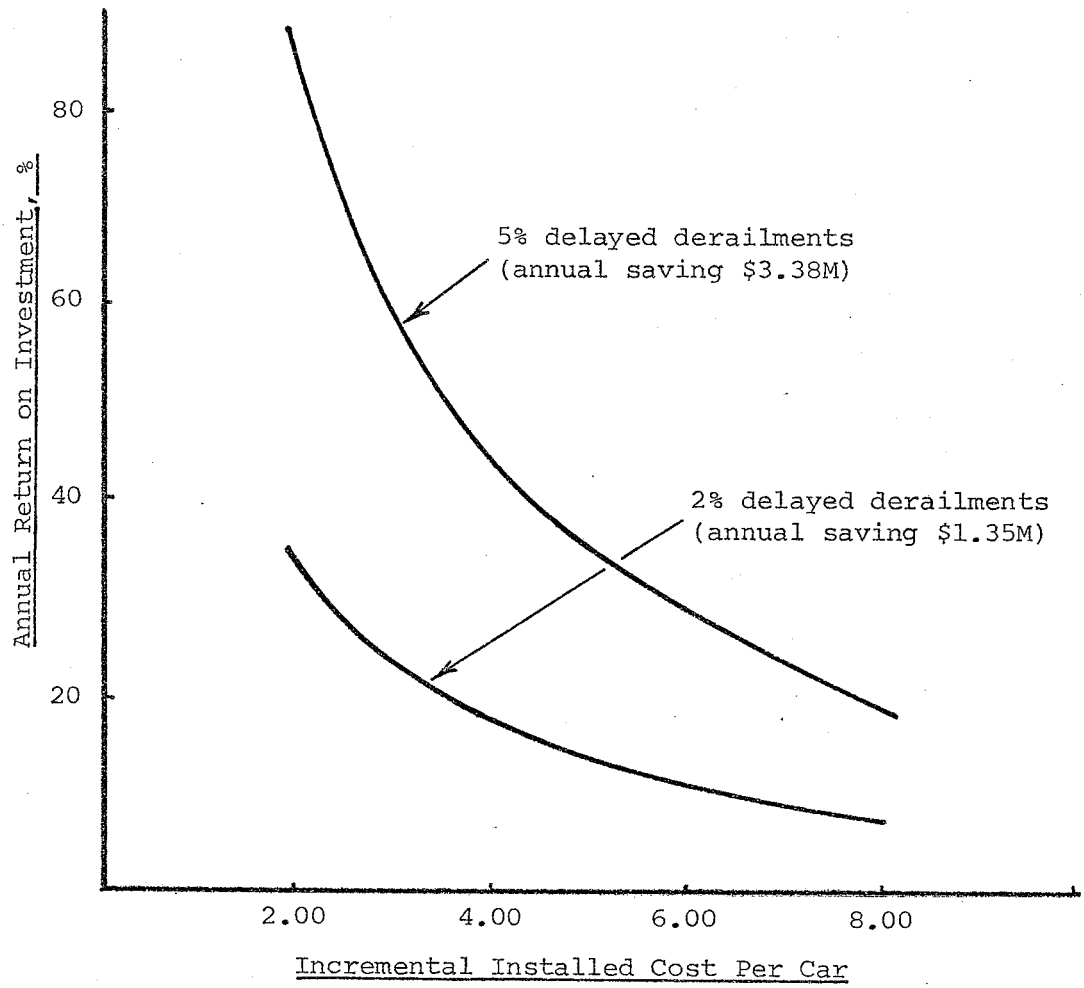

3000 miscellaneous road derailments per year (1970)

$75,000 average total cost per derailment (1970)

Sensor effective on loaded car-miles only (60%)

Sensor reduces average cost of delayed derailment by 50%

FIGURE 37. RETURN ON INCREMENTAL INVESTMENT FOR LOCAL DERAILMENT SENSOR

CONCLUSIONS

Hotbox Detector System

The Nitinol self-powered bearing temperature sensor with thermal battery and high-energy explosive actuator for direct service brake application appears to be fully compatible with railroad operating and maintenance conditions and procedures. It involves a minimum of technical uncertainties and can be engineered for widespread application with very low risk. Savings are directly related to the number of cars equipped but not dependent upon installation in the complete fleet except as mass production lowers component cost.

The same basic system with piezo crystal output and low-energy explosive actuator promises somewhat lower hardware cost, but with less assurance of full compatibility with current maintenance procedures.

Either system promises a substantial net return on investment on the basis of tangible savings alone. Since the systems are externally identical in performance, parallel competitive development, qualification and even service use is feasible.

Resonant Rock-Off Detector System

This system appears potentially capable of generating a high return on investment on the basis of current accident rates and estimates of the number of cars involved; its effectiveness is not fully established, nor does it have a clear advantage over alternative ways of alleviating the problem. Its development and cost-effective use is not highly dependent upon mass-production considerations, however, and further investigation of its possibilities appears desirable.

Local Derailment Sensor System - A local derailment sensing feature can be piggybacked onto the basic hotbox detector system at such low cost that it appears to have significant potential for tangible cost savings, even if only partially effective in a small proportion of the total number of derailments currently being experienced. A more detailed study of the number of situations in which it would be helpful and certain (rather inexpensive) full-scale measurements of journal box acceleration signatures should be made before making commitments for further development.

REFERENCES

(a) FRA Accident Bulletin No. 139 "Summary and Analysis of Accidents on Railroads in the United States" 1970

(b) FRA-RT-70-26 Report "Investigation of Boxcar Vibrations" Sep 1970

(c) Transactions of the ASME - Journal of Engineering for Industry, Nov 1968, "Digital Computer Simulation of Railroad Freight Car Rocking" p. 701

(d) Conference Paper No. 70 CP 266-1GA for presentation at ASME/IEEE Joint Railroad Technical Conference, Philadelphia, Pa., 7-8 Apr 1970 "Vehicle Surveillance for High-Speed Railcars" by K. B. Ullman

(e) NOLTR 63-126 "Development of Rocket Fuzes Mk 196 Mod 0 and Mk 197 Mod 0 for HASP" May 1963

(f) Proceedings of Eighteenth Defense Conference on Nondestructive Testing, 29-31 Oct 1969, Paper No. 2 "A Device for Automatic Analysis of Radiographic Film Images" p. 94

(g) NASA-SP 5110 Report "55-Nitinol - The Alloy with a Memory: Its Physical Metallurgy, Properties, and Applications"

(h) NOLTR 72-244 "Annual Progress Report of the Chlorine Storage and Distribution System for the Lithium-Chlorine Battery" 1 Sep 1972

(i) MIL-I-23659C "Initiators, Electric, General Design Specification for" 31 Aug 1972

APPENDIX A

DERAILMENT COST VERSUS INVESTMENT

The rationale behind this elementary analysis is an assumption that there is some positive correlation between the acquisition cost of a subsystem and the cost of improving its performance by overdesign, better quality control, monitoring for incipient failure, or inspecting it more thoroughly or frequently. If this assumption is valid, those subsystems which show a markedly higher accident cost per unit investment should be the most promising targets for consideration. Little significance can be attached to differences less than a factor of two, nor is the absolute value of the estimated cost per unit of investment likely to be of significance, except perhaps where it indicates that a point of diminishing return has already been reached.

Item	Units in Service ($x10^{-3}$)	Unit Cost ($)	Total Investment ($ $x10^{-6}$)	No. of Derailments Caused (1970)	Average Derailment Cost ($ $x10^{-3}$)	Total Annual Accident Cost ($ $x10^{-3}$)	Annual Derailment Cost/$1000 Investment ($)
NOTES:	(A)	(B)		(C)	(D)		(E)
Truck Structure	1,850	1,000	1,850	280	75	21,000	11.
Couplers and Draft Gear	1,850	500	975	290	75	21,800	22.
Air and Hand Brake Gear	1,850	500	975	150	75	11,300	12.
Wheels	1,850	1,000	1,850	290	75	21,800	12.
Axles	1,850	1,000	1,850	50	75	3,750	2.
Journals	1,850	1,000 (F)	1,850	400	130	52,000	28.
Car Structure and Accessories	1,850	8,000	14,800	100	75	7,500	.50
Locomotives (G)	25	200,000	5,000	7	75	525	.10
Rock-off Susceptible Freight Cars	50 (H)	1,000 (H)	50	70	75	5,250	100.
Truck and Roadway	210,000 (miles)	100,000 (per mile)	21,000	2,400	55	132,000	6.3

NOTES:

(A) Car sets

(B) Current (1973) undepreciated cost of acquisition

(C) From FRA Accident Bulletin No. 139

(D) Average direct cost as reported to FRA (roadway and equipment only) x 3.5 (minimum estimated ratio of total cost, including damage to lading, cost of delays, rerouting, etc., to reportable cost)

(E) Rounded to two significant figures

(F) Roller bearings assumed

(G) Prime mover, transmission, structure, controls only

(H) Estimated number of cars requiring special stabilization; cost of suspension components (springs, snubbers, stabilizers, etc.) only

APPENDIX B

UNSPRUNG MASS VIBRATION/SHOCK ENVIRONMENT

Ref: (a) Investigation of Boxcar Vibrations, Federal Railroad Administration, Office of High Speed Ground Transportation, Report No. FRA-RT-70-26, Aug 1970

To evaluate vibration/shock resistance of those components which will experience the environment of the unsprung mass of the freight car truck, a special random vibration test to simulate this environment under varying operating conditions has been generated. The data from which the test was derived are contained in reference (a). This study investigated the effect of spring rate, load, snubbing, rough track, vehicle speed and flat wheels on the vibration environment of the freight car and truck. The broad band rms level of the vibration of the unsprung section of the truck for all of the worst cases (60 mph, 1/2 inch low joints, 1/4 inch lateral track irregularities) except the flat wheels, did not exceed approximately 2g rms. For the case of six inch flat wheels, peaks as high as 30g may be expected. For a purely random wave-form this would represent an rms level of approximately 10g. It was therefore decided that the vibration test should be done at two levels. The spectrum shape was the same for both tests and is indicated in Figure B-1. The units were tested at the 2g-rms level for one hour, the level was then increased to 10g-rms for 10 minutes. This test was performed in each of three orghogonal axes.

Unsprung Truck Mass Vibration Test

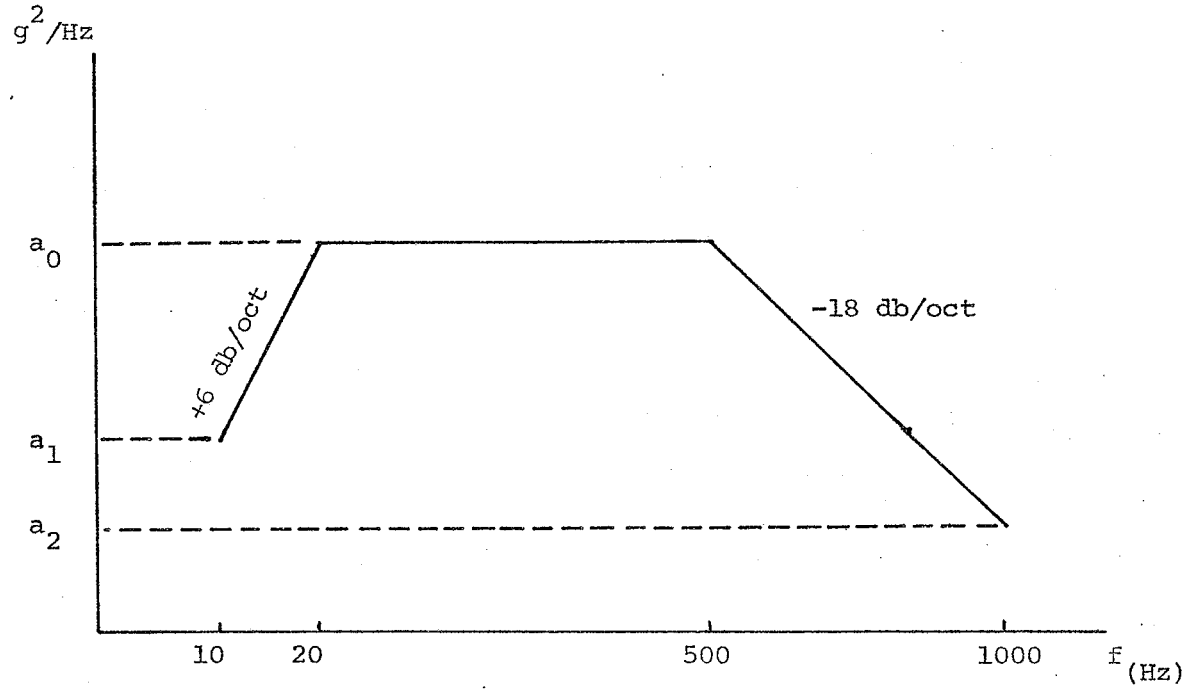

LEVEL ONE: (2 gm)

$a_0 = 0.00688\ g^2/Hz$

$a_1 = 0.00172\ g^2/Hz$

$a_2 = 0.000108\ g^2/Hz$

LEVEL TWO: (10 gm)

$a_0 = 0.172\ g^2/Hz$

$a_1 = 0.043\ g^2/Hz$

$a_2 = 0.0027\ g^2/Hz$

FIGURE B-1. RANDOM VIBRATION TEST FOR ANTI-DERAILMENT SENSOR PROGRAM

APPENDIX C

WHEEL-LIFT CALCULATIONS

This section presents the calculation of the time required for the wheel to lift off the rail once the entire weight of the car and load is supported on a single side frame. The mechanical system under consideration is shown in Figure C-1.

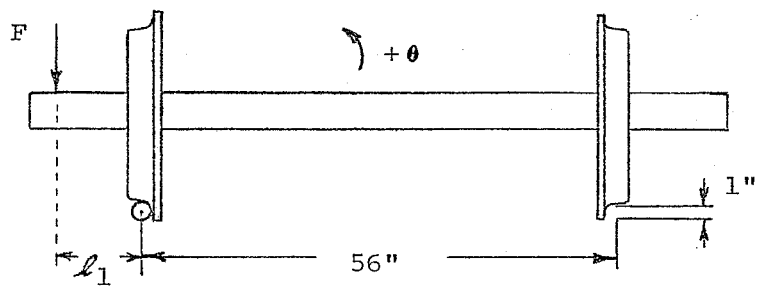

FIGURE C-1. MECHANICAL SYSTEM

The force acting on the system is the total weight of the car and lading acting through the springs. This results in a torque being applied to the entire wheel-axle side frame system. This torque is resisted by the rotational inertia of the wheels, axles and the far side frame about an axis through the point of wheel-rail contact in the following manner:

$$\tau = J\ddot{\theta}$$

where $\tau = F\ell_1$. Integrating twice with respect to time we obtain the angular rotation of the system

$$\theta(t) = \frac{\tau t^2}{2J}.$$

When this rotation is sufficient to lift the far wheels one inch ($\tan\theta = \frac{1}{56}$) then the wheel may leave the rail. The rotational inertia J, neglecting the near-side wheels is the sum of the individual

rotational inertia of the two far wheels, the two axles and the far side frame:

$$J \text{ wheel} = \frac{MR^2}{4} + ML^2 \simeq ML^2 = 800(56)^2 = 2.509 \times 10^6 \text{ lb-in.}^2$$

$$J \text{ axle} = \frac{M}{12}(3r^2 + h^2) + Md^2 = 33.3\ (17.7 + 5184) + 400(36)^2 =$$

$$6.88 \times 10^5 \text{ lb-in.}^2$$

$$J \text{ side frame} \simeq ML^2 = 1000(62)^2 = 3.844 \times 10^6 \text{ lb-in.}^2$$

$$J \text{ total} = 2 \times J \text{ wheel} + 2 \times J \text{ axle} + J \text{ side frame} = 1.03 \times 10^7$$

If the applied torque is a result of ½ the weight of a fully loaded 70-ton freight car (F = 110,000 lb) acting 6 in. outboard of the wheel-rail contact point.

$$\tau = 660{,}000 \text{ in.-lb}$$

The time to derailment is then given by

$$t = \sqrt{\frac{2J\theta}{\tau}}$$

$$t = \sqrt{\frac{2 \times 1.03 \times 10^7 \times \frac{1}{56}}{660{,}000 \times 386}} = 0.038 \text{ sec}$$

Note that any decrease in load will increase the time to derailment. In particular for an empty 70-ton car, F = 21,500 lb.

$$t = 0.085 \text{ sec}$$

APPENDIX D

DYNAMIC ANALYSIS OF WHEEL MOTION DURING DERAILMENT

Calculations are made to determine if it would be feasible to sense a local derailment by detecting a velocity change on the impact of the derailed wheel or wheels with the tie plate. Two modes of local derailment are considered, one case in which a single wheel drops from the rail and the second case in which two wheels on the same axle drop to the tie plate. For the purposes of calculating the velocity change in a normal operating shock (non-derailment condition) a ¼ inch drop of a single wheel is assumed.

The mechanics of a local derailment is considered to be as follows. At the moment the wheel (or wheels) leaves the rail (on a gauge side drop) it is accelerated downward by gravity plus the weight of the freight car acting through the freed spring (or springs) until the spring is fully extended, after which time the released mass falls freely due to gravity alone. The displacement of the end of the freight car is due to the downward g force (= $\frac{3}{2}$ g due to levered effect; see Figure D-1) less the upward spring force. The displacement of the freed truck components is due to the combination of the downward "g force" and the downward spring force. The spring force is zero when the difference in these two displacements is equal to the free length of the spring. Calculations have shown that even though the car body is accelerating faster than the truck at the spring during the free fall ($\frac{3}{2}$ g to $\frac{1}{2}$ g), it does not catch up to the truck before impact due to the high velocity of the truck at the time the spring is fully extended.

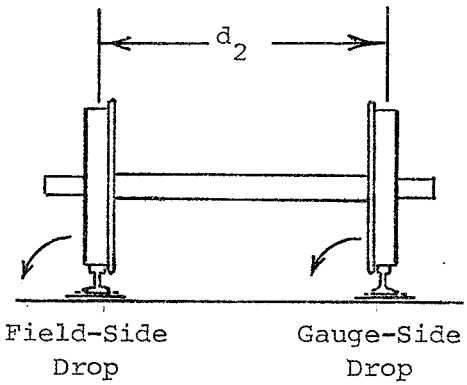

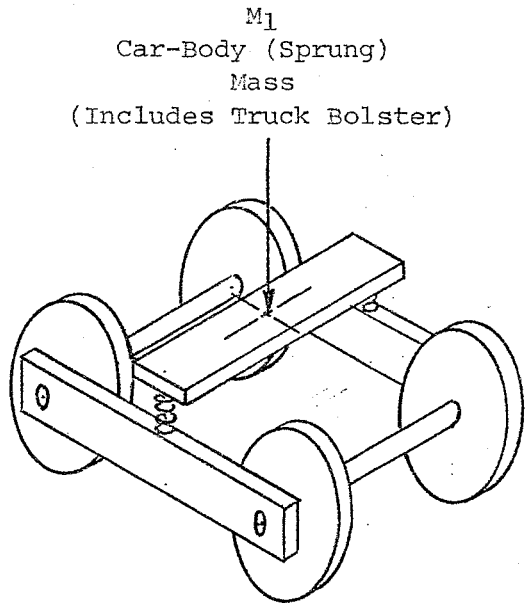

NOMENCLATURE AND ASSUMED VALUES

(70-ton, 50-foot, low-tare car)

d_1 = truck wheelbase, 68 inches

d_2 = wheel center spacing, 60 inches

J = rotational inertia

M_{ax} = axle mass, 500 pounds

M_{wh} = wheel mass, 800 pounds

M_{sf} = sideframe mass, 800 pounds

M_1 = car-body sprung mass; 206,400 pounds loaded, 43,000 pounds empty

K = spring constant of AAR D-4 (3-1/16 inch travel) springs; 14,850 lb/in.

θ_1 = rotation of car body (radians)

θ_2 = rotation of truck sideframe (radians)

F_s = spring force, pounds

$\ddot{X}$ = acceleration of wheel, in./sec^2

ℓ_1 = truck center-to-center distance

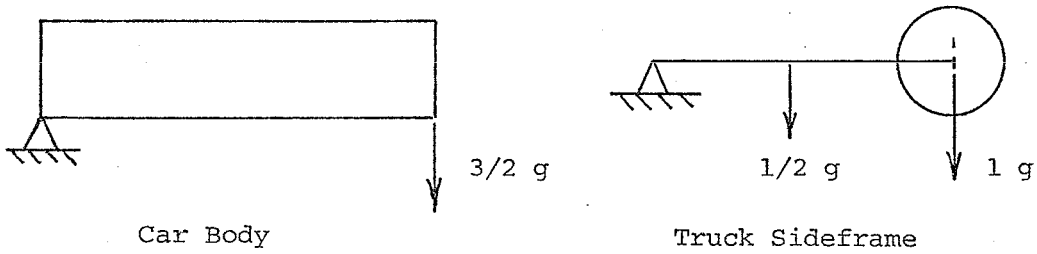

FIGURE D-1. FREE FALL GEOMETRIES

The following computations illustrate that a single wheel derailment (case 1) would result in a higher velocity change on impact than a two-wheel derailment (case 2).

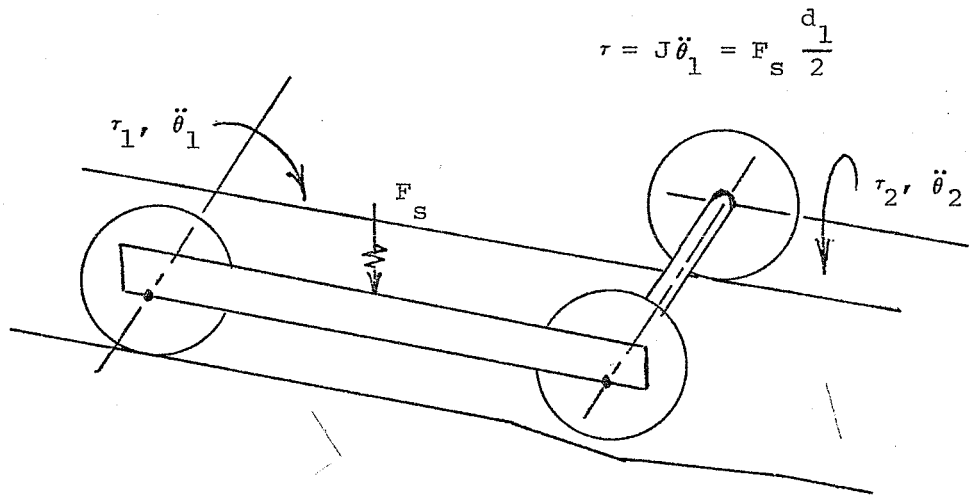

Case 1: Only a single spring force (¼ weight of car) accelerates the truck

FIGURE D-2. SINGLE-WHEEL DROP

Rotational inertias are as follows:

Sideframe

$$J_{sf} \simeq M_{sf} \left(\frac{d_1}{2}\right)^2$$

Single Wheel

$$J_{wh} = M_{wh}\, d_1^{\,2}$$

Axle

$$J_{ax} = \frac{\tau_1}{\ddot{\theta}_1} = \frac{\tau_1}{d_1}\left(\frac{d_1}{\ddot{\theta}_1}\right) = \frac{\tau_2}{d_2}\left(\frac{d_1}{\ddot{\theta}_1}\right) = \frac{d_1}{d_2}\frac{\left(J_2\,\ddot{\theta}_2\right)}{\ddot{\theta}_1} = \frac{d_1}{d_2}\frac{\left(\frac{d_1\,\ddot{\theta}_1}{d_2}\right)}{\ddot{\theta}_1} = \frac{d_1^{\,2}}{d_2^{\,2}}\, J_2$$

where J_2 is the rotational inertia of the axle about the far wheel

$$\left(J_2 = \frac{1}{3} M_{ax}\, d_2^{\,2}\right)$$

$$\therefore J_{ax} = \frac{1}{3} M_{ax}\, d_1^{\,2}$$

$$J_{total} = J_{sf} + J_{wh} + J_{ax} = d_1^{\,2}\left(\frac{M_{sf}}{4} + M_{wh} + \frac{M_{ax}}{3}\right)$$

$$\ddot{x} = d_1\ddot{\theta} = \frac{F_s \frac{d_1^{\,2}}{2}}{J_{total}} = \frac{F_s}{2\left[\frac{M_{sf}}{4} + M_{wh} + \frac{M_{ax}}{3}\right]} \qquad (1)$$

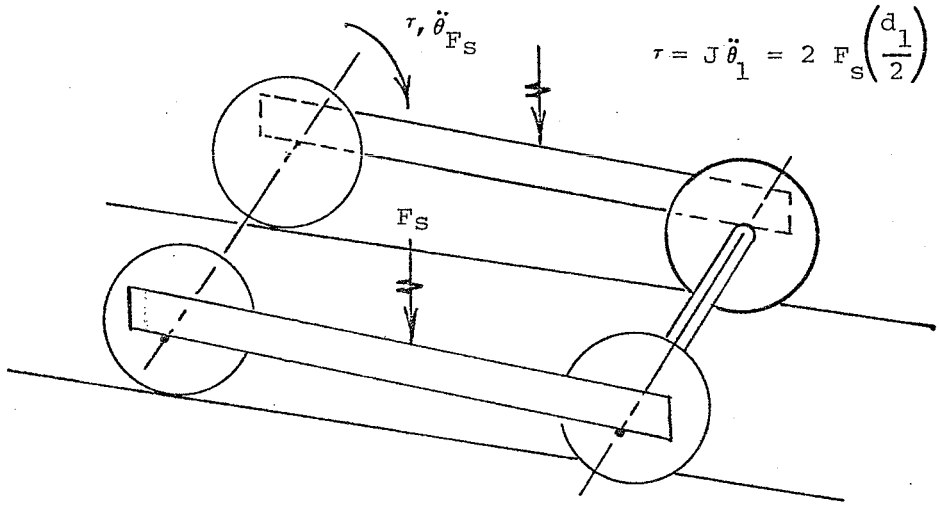

Case 2: Two spring forces (½ weight of car body) acclerates the truck.

FIGURE D-3. TWO-WHEEL DROP

Rotational inertias are as follows:

Two Sideframes

$$J_{sf} \simeq 2\ M_{sf}\left(\frac{d_1}{2}\right)^2 = \frac{M_{sf}}{2}\ d_1^{\ 2}$$

Two Wheels

$$J_{wh} = 2\ M_{wh}\ d_1^{\ 2}$$

Axle

$$J_{ax} = M_{ax}\ d_1^{\ 2}$$

$$J_{total} = J_{sf} + J_{wh} + J_{ax} = d_1^{\ 2}\left[\frac{M_{sf}}{2} + 2\ M_{wh} + M_{ax}\right]$$

$$\ddot{X} = d_1\ddot{\theta} = \frac{2\ F_s\left(\frac{d_1}{2}\right)d_1}{J_{total}} = \frac{F_s}{\frac{M_{sf}}{2} + 2\ M_{wh} + M_{xl}} \qquad (2)$$

Comparing equations (1) and (2) it is clear that the greatest acceleration will occur when only a single wheel drops from the rail (case 1). For this reason, as well as for the likelihood of occurrence, case 1 is used for the normal operating short calculation and case 2 is used for the derailment calculations.

The following mathematical model was used to compute the drop trajectories. In the two-wheel drop:

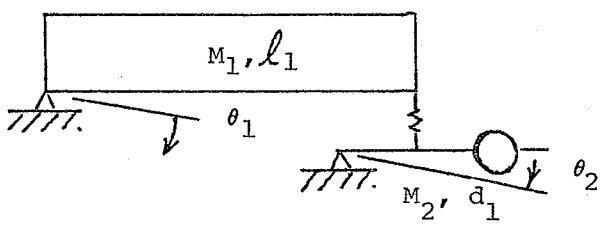

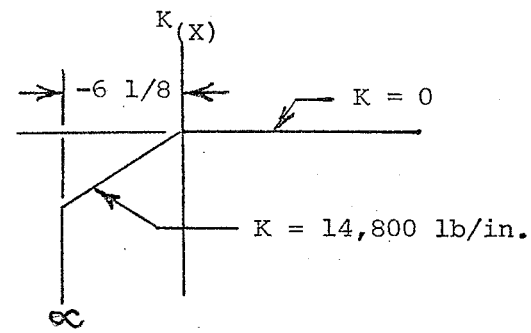

$$J_1\ddot{\theta}_1 - M_1 g \frac{\ell_1}{2} + K\left(\ell_1\theta_1 - \frac{d_1}{2}\theta_2\right)\ell_1 = 0$$

$$J_2\ddot{\theta}_2 - M_2 g \ell_2 - K\left(\ell_1\theta_1 - \frac{d_1}{2}\theta_2 \quad \frac{\ell_2}{2}\right) = 0$$

$$J_1 = \frac{M_1 \ell_1^2}{3} \qquad J_2 = d_1^2\left(\frac{M_{sf}}{2} + 2\,M_{wh} + M_{ax}\right)$$

The above coupled non-linear differential equation was solved digitally using the numerical data given in the table. The calculations were made for a loaded car for both the 5 inch (gauge side) drop, and the ¼ inch normal operating drop (using the case 1 analysis). For the case of an empty car the calculations were made for a gauge side drop. The resulting drop trajectories are illustrated in Figures D-4, D-5, and D-6 . The velocity at impact (also the impact velocity change with no bounce) is as follows:

	Loaded Car	Empty Car
¼ inch drop	5.6 ft/sec	--
5 inch drop	18.7 ft/sec	8.1 ft/sec

Figure D-5 also shows the theoretical maximum vertical impact velocity for 33-inch wheels with various lengths of flat spots. This occurs at the speed at which the wheel can drop so as to land squarely on the flat (about 30 mph for the 6-inch flat). Since flat spots typically occur on both wheels, this single-wheel-drop analysis gives values that are slightly higher than the more likely two-wheel case.

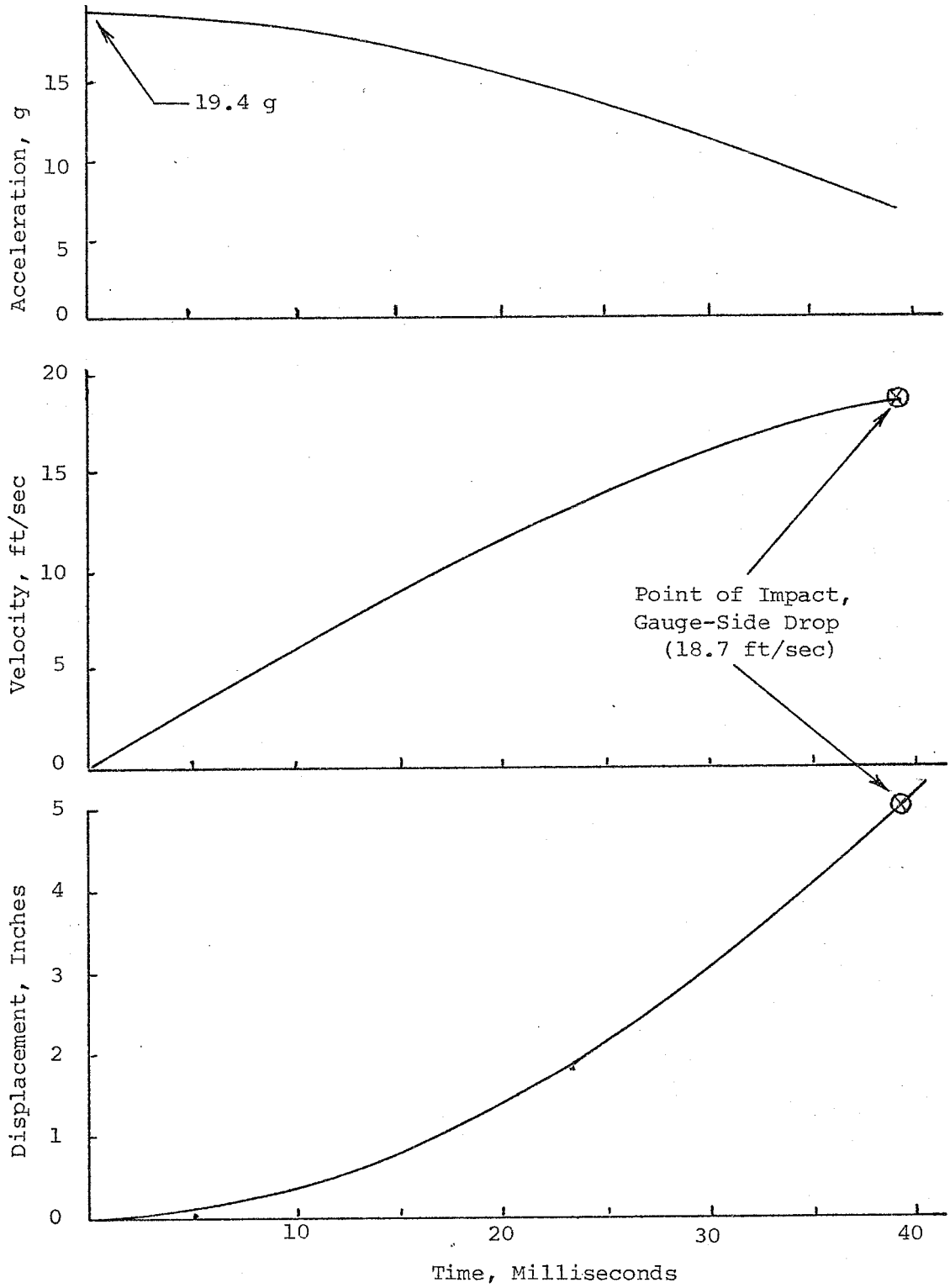

FIGURE D-4. WHEEL-DROP TRAJECTORY,
LOADED CAR, TWO-WHEEL DERAILMENT

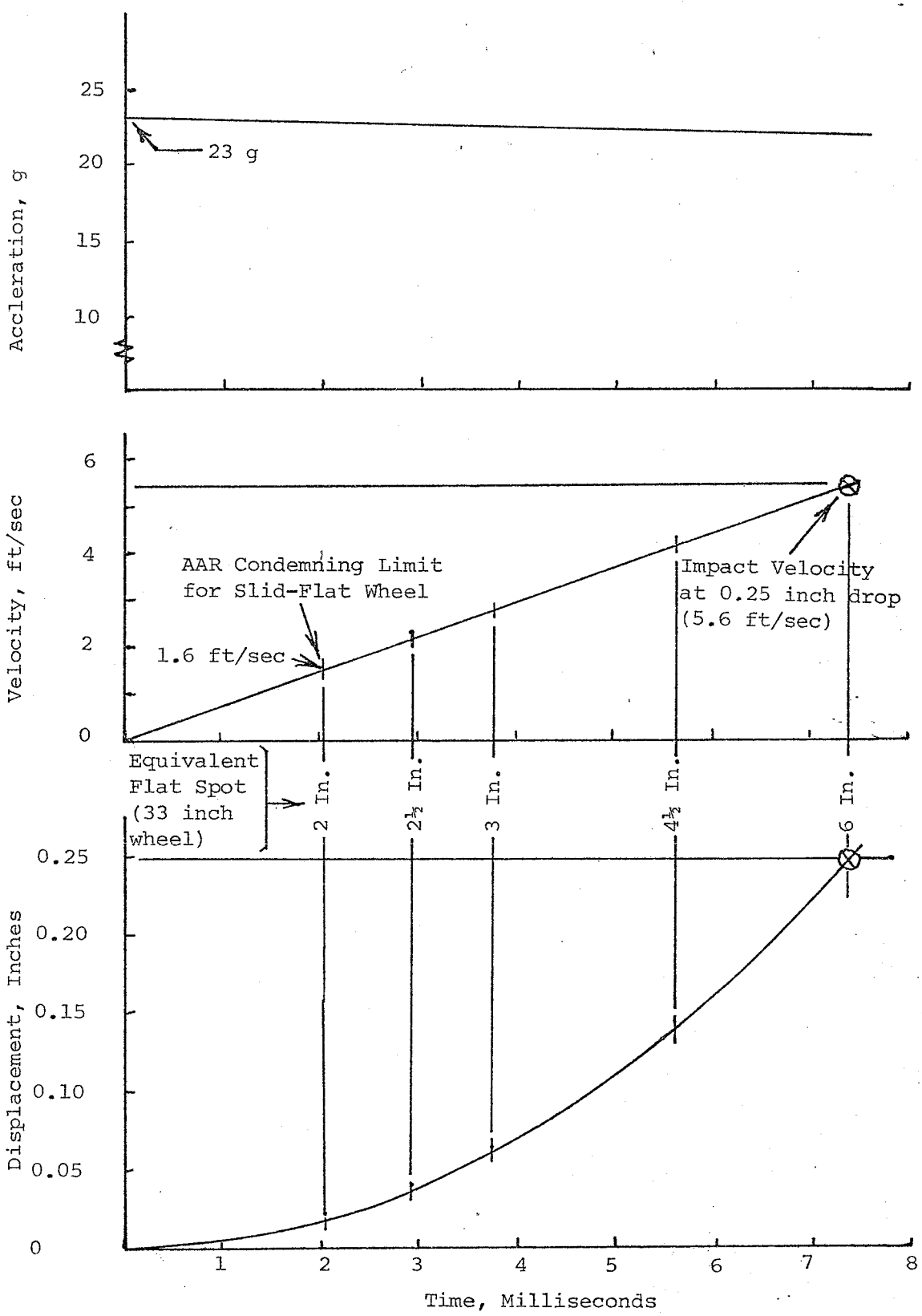

FIGURE D-5. FIRST QUARTER-INCH WHEEL-DROP TRAJECTORY, SINGLE -WHEEL CASE LOADED CAR

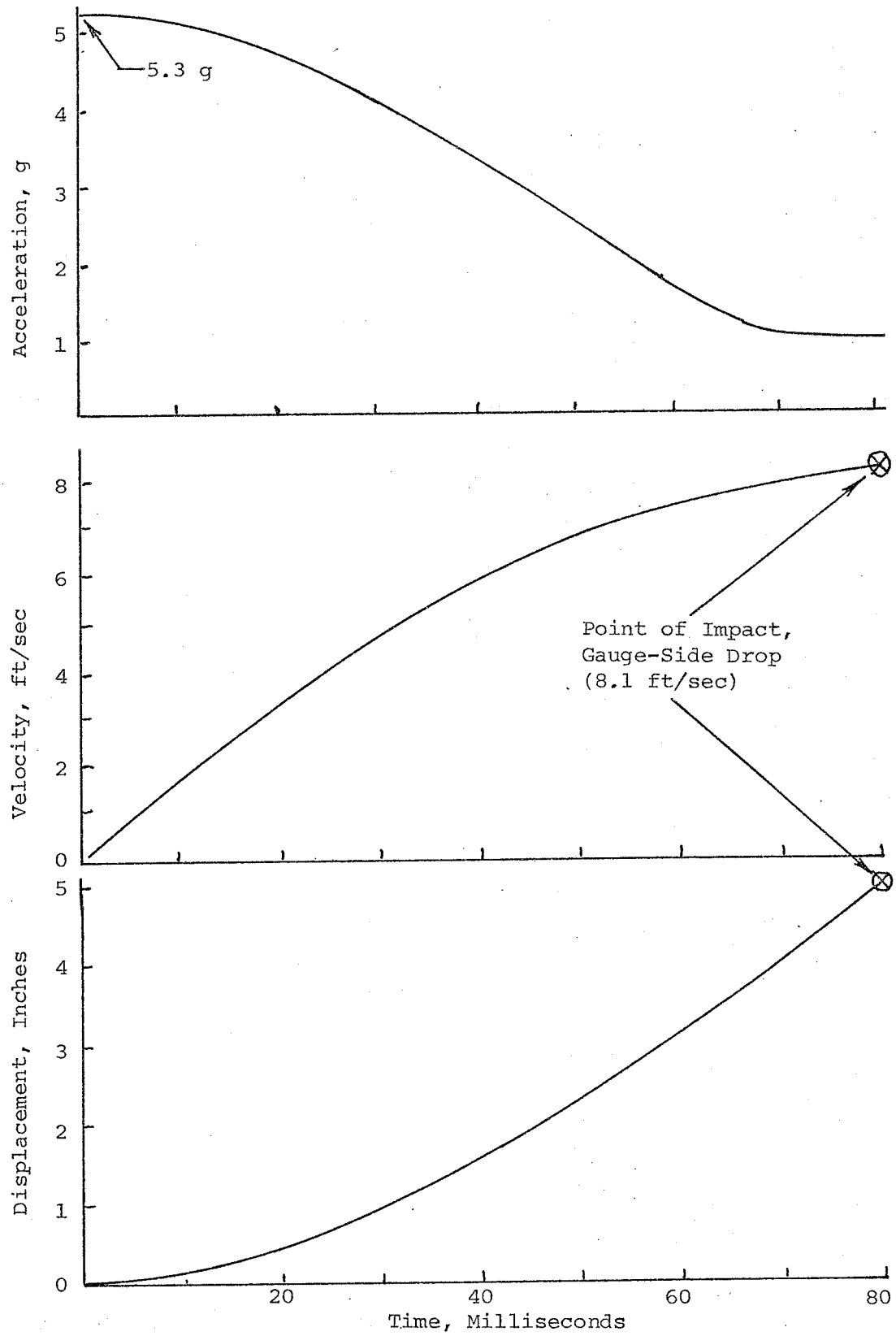

FIGURE D-6. WHEEL-DROP TRAJECTORY, EMPTY CAR, TWO-WHEEL DERAILMENT

APPENDIX E

EXCERPTS FROM MILITARY STANDARD 331

FUZE AND FUZE COMPONENTS, ENVIRONMENTAL AND PERFORMANCE TESTS FOR

The following descriptions of environmental tests are excerpted from the Military Standard governing test procedures for use in the development of fuzes and fuze components to provide pertinent details of the test conditions which have been applied to military items considered for use or adaptation in the Anti-derailment Sensor feasibility study.

The extent to which these standard test procedures have been applied to designs discussed in other sections of this report is as therein specifically noted. In some cases, as noted, operability criteria have also been applied after what are normally safety tests in order to obtain further information regarding probable ruggedness, life and reliability in service.

On 10 January 1966, Military Standard 331 superseded and combined numerous earlier military standards in the 300 and 350 series covering individual tests; occasional references to these essentially similar tests may appear in some referenced reports.

TEST 101

JOLT

1. PURPOSE

The jolt test is used during development and production of fuzes to check the safety and ruggedness of the fuze design.

2. DESCRIPTION OF TEST

2.1 This test shall consist of jolting each sample fuze 1,750 times in each of three positions in the jolt testing machine, as shown on Ordnance Corps Drawing 81-3-30. In that part of the test where the fuzes are positioned with the longitudinal axis in a horizontal direction, the fuzes shall be oriented so as to expose what are considered to be the most vulnerable plane or planes of weakness. When used as a development test, it should be repeated at least once or to a point of serious damage to the fuzes.

2.2 All fuze explosive elements shall be present in the fuze during the test.

3. CRITERIA FOR PASSING TEST

3.1 In general, it is not required that the fuzes be operable after this test. The criteria by which the samples are judged to have withstood this test are that (1) no elements shall explode and (2) no parts shall be broken, be deformed, be displaced, come apart, or arm, in such a manner as to make the assembly unsafe to handle or dangerous to use as determined by examination.

3.2 Breakdown and inspection, together with engineering judgment, are usually the basis for the decision.

4. TEST EQUIPMENT

4.1 A photograph of the jolt machine is shown on Figure 2, and an assembly drawing of the machine is shown on Figure 1. The machine consists basically of a pivoted arm, the free end of which is alternately elevated to a height of 4 inches by cam action and allowed to drop freely upon a leather-padded anvil. The free end of the arm is provided with three sockets into which fuzes can be assembled in the three required positions as shown on Figure 2. The machine must be equipped with the proper adapters to receive the fuzes. In special cases, such as some bomb fuzes, it may be necessary to permit the use of special supports.

6. RELATED INFORMATION (not a mandatory part of this test)

6.1 The jolt test, together with the jumble test (TEST 102), has been used for many years to establish the safety and general ruggedness of fuze designs under the application of repeated shocks in several directions. The test was originally designed as a simulation of the shocks received during transportation on Army caissons over rough terrain. In its present application the test is not intended to be accurately representative of actual conditions which may be encountered in transportation, handling, or use of the fuze. It is rather a deliberate exaggeration of severe conditions to which the fuze conceivably might be exposed during transportation or use. As a result of its long use much information has been accumulated regarding the behavior of a wide variety of fuzes in the test. As a development test it is valuable in demonstrating the basic ruggedness of the fuze design. Although it is not a requirement of this test that the fuze be operable afterward, some fuze designers do require that their fuzes remain operable. In such cases operability is generally judged by examination only, although firings may be conducted in addition where considered appropriate by the designer.

6.2 The deceleration-time curves for a fuze in a typical jolt machine have been measured by piezoelectric accelerometer for two weights of fuze and two conditions of leather pad on the anvil, and are shown on Figure 3. The peak deceleration can be expected to run from about 200 to 275 g's. The shape of the deceleration-time curve will vary depending on the loading of the arm and the condition of the leather pad, the maximum deceleration occurring when the load is a minimum and the leather pad is in poor condition. Tests with a use-hardened pad gave peak decelerations 10 percent larger than those with leather in good condition. Severe vibrations of the arm at its natural frequency (about 2,000 cps), result from heavy loading, and the jolt persists over a longer time. These effects are shown on Figure 3, where the actual loadings were as follows:

Load	Weight
1 accelerometer	6.3 pounds.
1 accelerometer, plus 2 fuzes with fixtures	22.3 pounds.

As can be seen on Figure 3, the condition of the leather pad affects the deceleration, and the pad should be replaced from time to time.

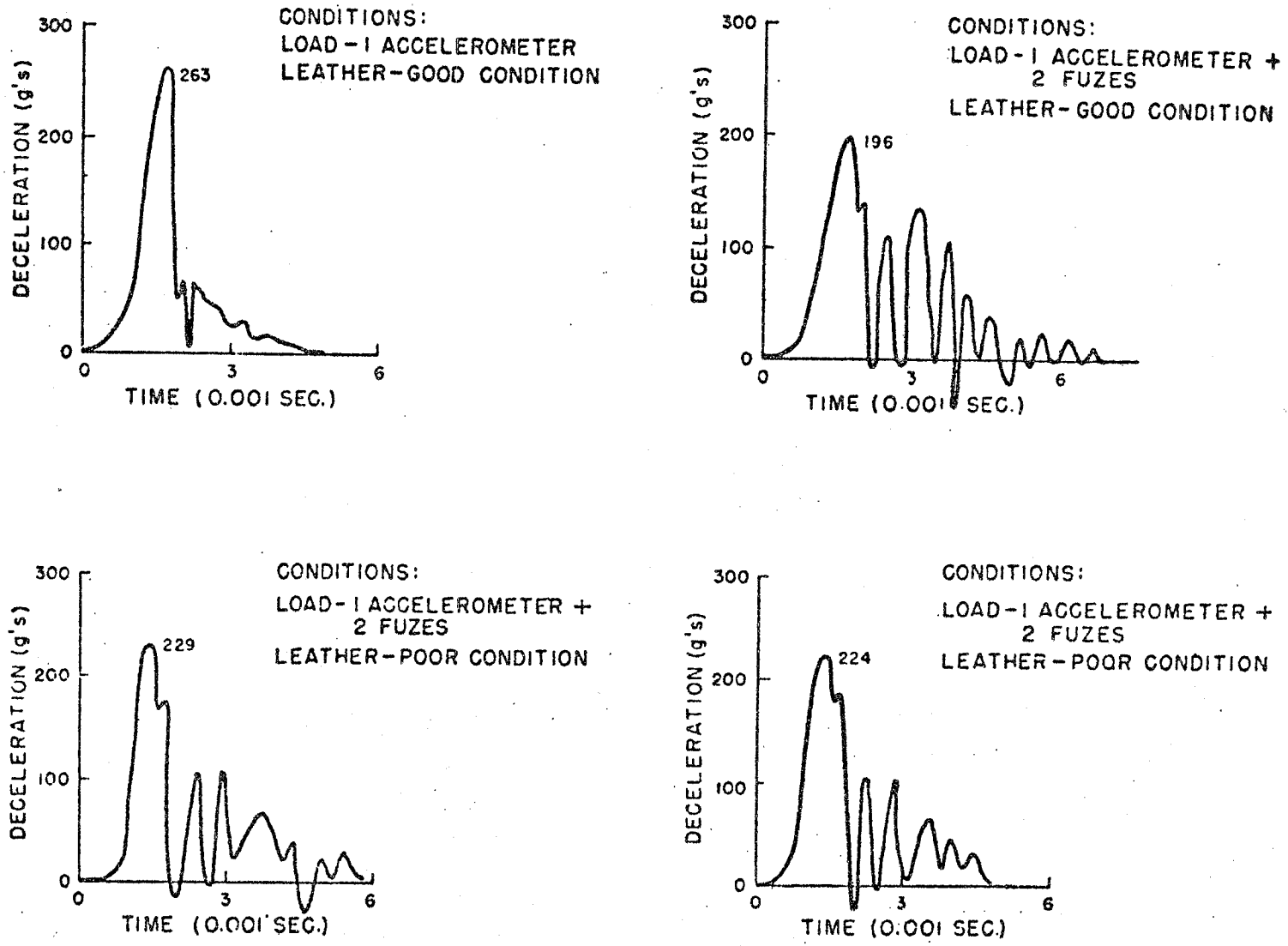

FIGURE 3.—Comparison of deceleration curves for jolt machine.

TEST 102.1

JUMBLE

1. PURPOSE

The jumble test is used during development and production of fuzes to check the safety and ruggedness of the fuze design.

2. DESCRIPTION OF TEST

2.1 This test consists of jumbling a bare fuze in a rotating, closed, wood-lined metal box. The inside dimensions of the box are sufficiently larger than the fuze's external dimensions to allow the fuze to jumble freely during box rotation so that it experiences random direction impacts. Three different size boxes are required to accommodate the size range of fuzes which are to be tested.

2.2 The test box containing the fuze is rotated at a speed of 30±2 revolutions per minute for 3600±10 revolutions to achieve the desired test conditions.

2.3 The fuze shall be completely assembled, including all explosive elements which are a part of the fuze design.

3. CRITERIA FOR PASSING TEST

3.1 The fuze is not required to be operable during or after the test but must remain safe. No explosive elements shall be initiated and no parts shall be broken, come apart, or affected in such a manner as to make the fuze unsafe to handle, transport or store. If the damage or irregularity does not prevent assembly of the fuze to the weapon the fuze must be safe if used without knowledge of the damage.

3.2 The decision that the fuze has met, or failed to meet the criteria is based on breakdown, inspection and appropriate tests if necessary, together with engineering judgment.

4. TEST EQUIPMENT

4.1 The test equipment shall be in accordance with Drawing QEL 1386-1, or alternatively, shall be in accordance with Drawing 81-3-35 as modified in accordance with drawing QEL 1387-1. This equipment consists of three sizes of wood-lined (hard maple) metal boxes, and the necessary structure and drive mechanism to support and rotate one or more boxes on the axis indicated in the above drawings. (See Figures 102.1-2 thru 102.1-13).

4.2 The size of box required for a test will depend on the size of the fuze being tested. The test has been devised for fuzes having a maximum dimension up to and including 15 inches. For fuzes having a maximum dimension greater than 15 inches, see 6.1.

6. RELATED INFORMATION (not a mandatory part of this test)

6.1 The requirements to test fuzes having a maximum dimension greater than 15 inches was not considered to occur often enough to economically warrant requiring an additional box as part of the standard equipment. However, when such fuzes are to be tested it is necessary that the proper size and type of test box be used. For fuzes having a maximum dimension greater than 15 inches and up to and including 20 inches the test box should be identical to the other three boxes in materials, construction, axis of revolution and mounted position. The internal dimensions of the box, with wood-liners installed, shall be 21 x 24 x 28 inches. For fuzes with a maximum dimension exceeding 20 inches it is recommended that other methods of testing to this type environment be devised.

6.2 The jumble test has been used for many years to establish the safety and general ruggedness of fuze designs under severe conditions of transportation. Transport vehicles have changed in nature since the test was first devised, however, the occurrence of a "rough environment" of transportation is considered to have remained essentially of the same severity. This test therefore continues to be used as a safety and ruggedness test of fuze designs.

Fuze, Maximum Dimensions (INCHES)	Test Box
5 or less	A
Between 5 and 10	B
10 to 15 inclusive	C
Greater than 15	See 6.1

TABLE 102.1-I. SELECTION OF TEST BOX

TEST 104

1. PURPOSE

The transportation vibration test is used during the development and production of fuzes to check the safety and reliability of the fuze design under a wide variety of transportation conditions.

2. DESCRIPTION OF TEST

2.1 The test consists of vibrating bare fuzes according to a specified schedule of frequencies, amplitudes and durations while being maintained at prescribed temperature conditions.

2.2 The fuzes shall be completely assembled including all explosive elements which are a part of the fuze design.

2.3 The equipment and test procedure of Procedure I are applicable to fuzes during development and those of Procedure II are applicable to fuzes during production.

3. CRITERIA FOR PASSING TEST

3.1 The fuzes must be safe and operable following this test.

3.2 The decision that the fuzes have met or failed to meet the criteria is based on breakdown, inspection, and appropriate tests, together with engineering judgment.

4. TEST EQUIPMENT

4.1 Test Equipment for Procedure I

4.1.1 The vibration equipment required to conduct this test may be any remotely controlled vibration machine, such as mechanical (direct-drive), mechanical reaction or electrodynamic type, producing essentially rectilinear simple harmonic motion and having the necessary capacity for force output, weight of load, and frequency range. Vibration machines which produce complex motion in a combination of circular or rocking modes may be used. However, the amplification conditions which occur with this type of equipment, due to variations of load sizes and shapes, should be determined and the maximum acceleration point established for use in monitoring. Frequency control may be continuous or by discrete steps, using logarithmic distribution. The vibration equipment must be capable of covering the frequency range of 10 to 500 cycles per second (cps) ±3%. Amplitude capabilities required for the 10 to 60 cps range shall be 0.10 plus or minus (±) 0.01 inch double amplitude or 2 ±0.2 G peak, whichever is lesser, and for the 60 to 500 cps range 5 ±0.5 G peak.

4.1.2 Rigid mounting fixtures which simulate the assembly of the fuzes in the rounds must be provided for the fuzes. In designing test fixtures, or in devising any method of securing test samples to the vibration table, it is desirable that any component or combination of components employed in the mounting system have a natural frequency at least three times the maximum frequency to be encountered in the test schedule.

4.1.3 The instrumentation required shall be capable of measuring within the prescribed limits the frequency and amplitude of the applied vibration and the conditions of temperature specified.

4.1.4 Temperature conditioning equipment shall be required to establish and maintain the fuze at the specified temperature levels during test.

5. TEST PROCEDURE

5.1. Test Procedure I

5.1.1 Temperature conditions. Three conditions are required for the complete test, (a) -65° ±4° (degrees) Fahrenheit (F), (b) +86° ±18°F, and (c) +160° ±4°F. Three fuzes are thus required as a minimum, one for each temperature, to fulfill the complete test procedure. Each fuze shall be subject to only one temperature. When more than the minimum number of fuzes are available they shall be divided among the three temperatures as equally as possible and each group shall be subjected to only one temperature. The fuzes shall be temperature conditioned prior to the test at the value chosen and maintained at that temperature level for the duration of the test.

5.1.2 Vibration conditions. The bare fuze shall be mounted in the test fixture and securely fastened to the vibration table. Vibratory excitation shall be applied parallel to each of three major axes in turn, (a) the longitudinal axis (line of flight), (b) a first transverse orthogonal axis, and (c) a second transverse orthogonal axis. The two transverse axes and the sense of the vibration (nose up or nose down) along the longitudinal axis shall be chosen to expose the most critical or vulnerable positions of the fuze to the vibration. The vibration schedule used shall be one of the following specified, dependent upon the method of frequency control of the vibration equipment.

5.1.2.1 Cycling method. The vibration schedule of Table I shall be used. Frequency shall be controlled by logarithmic sweep. Total test duration shall be 24 hours plus the time spent at resonant frequencies. The resonant frequencies should be determined during the first cycling period for each axis position. When resonant conditions are not observed within the specified vibration schedule the resonance vibration shall consist of performing four additional sweeps, two over the 10-60-10 cps range and two over the 60-500-60 cps range, 15 minutes each, totalling 60 minutes.

TABLE I. Vibration schedule (cycling method)

Type	Frequency CPS	Input Amplitude	Cycles*
Cycling	10-60-10	0.10 plus or minus (±) 0.01 inch double amplitude or 2 ± 0.2 G's peak, whichever is lesser	10
Cycling	60-500-60	5 plus or minus (±) 0.5 G peak	14
Resonance	As determined (would be single frequency points).	As indicated above in the specific frequency range	Dependent upon the number of resonant points.

*Duration at each cycle and at the resonant frequency shall be 20 minutes. The total cycling test time in each axis shall be 8 hours and the test time at resonant points shall be 20 minutes times the number of resonant frequencies.

TEST 105

TEMPERATURE AND HUMIDITY

1. PURPOSE

The temperature and humidity test is used during development and production of fuzes to check the ability of fuzes to withstand adverse climatic conditions of temperature and humidity.

2. DESCRIPTION OF TEST

2.1 This test consists of exposing bare fuzes to the schedule of temperatures and humidities specified in 2.2 for a total of 28 days.

2.2 The total test is made up of two complete 14-day "JAN temperature and humidity cycles." The basic 14-day unit or "JAN TEMPERATURE AND HUMIDITY CYCLE" consists of cycling fuzes nine times between the extremes of +160°F (95 percent RH) and -65°F with additional storage at +160°F (95 percent RH) and -80°F.

2.3 All fuze explosive elements shall be present in the fuze during the test.

3. CRITERIA FOR PASSING TEST

3.1 The fuzes must be safe and operable following this test.

3.2 Breakdown, inspection, and static tests, together with engineering judgment, are usually the basis for the decision. Fuzes may be subjected to operational tests under field conditions.

4. TEST EQUIPMENT

4.1 The special equipment needed to run this test consists of commercially available chambers or cabinets especially made to control temperatures and humidities. It will be noted that the test cycle is so arranged that the fuzes may be changed from one cabinet to another. Therefore if the equipment cannot be cycled between the various temperatures, the test can be run by transferring the fuzes between constant temperature cabinets.

4.2 In cases where fixtures are used in the cabinets to hold the fuzes in particular orientations, the design of the fixture shall be such that entrance of moisture will not be impeded and a minimum of interference with the attainment of thermal equilibrium will result.

4.3 The term "cabinet temperature" used throughout this test is defined as the temperature of the air immediately surrounding the fuzes. Cabinet temperature may thus be changed two ways; (1) by varying the temperature of a single cabinet, and (2) by moving the fuzes from one constant-temperature cabinet to another. The fluctuations from the specified temperatures shall at no time exceed 3°F.

5. TEST PROCEDURE

5.1 The sequence and duration of the exposure to heat and cold has been chosen so as to permit operation during a 5-day week, without overtime, and also to utilize the time from Friday at 1600 to Monday at 0800 in the sequence. For purposes of illustration, the graph shown on Figure 1, and the following description, present the sequence of operations based on a start at 0800 Monday. Regardless of the day and time the test is initiated, there shall be no deviation from the sequence of operations as prescribed.

5.2 The first step is to store the fuzes in a cabinet maintained at -65°F for at least 2 hours.

5.3 At 1600 Monday the cabinet temperature shall be changed to +160°F (95 percent RH), as rapidly as practicable. This may be done either by removing the fuzes from the low temperature chambers and placing them in a separate cabinet at +160°F (95 percent RH), or by changing the temperature of the chamber. The cabinet temperature must reach +160°F (95 percent RH) not later than 1800.

5.4 The fuzes shall be held under these conditions until 0800 Tuesday, at which time the temperature decrease must begin. The rate of decrease of cabinet temperature shall be equal to or greater than 36°F per hour for at least 2½ hours. Thus at 1030, the temperature of the air surrounding the fuzes will be +70°F or lower. The cabinet temperature must reach -65°F no later than 1400, and this temperature shall be held until 1600.

5.5 At 1600 on Tuesday, the cabinet temperature shall be changed to +160°F (95 percent RH) as rapidly as practicable (not later than 1800), and held until 0800 Wednesday.

5.6 On Wednesday, Thursday, and Friday the operations carried out on Tuesday shall be repeated.

5.7 After raising the cabinet temperature to +160°F (95 percent RH) on Friday evening, these conditions shall be maintained until 0800 on the following Monday.

5.8 At 0800 Monday, the sequence of operations described above for Tuesday of the first week shall be carried out and shall be repeated daily until Friday of the second week.

5.9 On Friday the cabinet temperature shall be reduced to -80°F instead of -65°F, and this temperature shall be maintained until 0800 Monday of the third week. The cycle is completed on Monday at 0800, at which time the second cycle shall be started.

5.10 The sequence of temperature and humidity conditions described above shall constitute one JAN temperature and humidity cycle. Two such cycles shall be applied in testing fuzes. Since at 0800 Monday of the third week the cabinet temperature will be -80°F, it will only be necessary to raise the temperature to -65°F, and the sequence of changes can be followed exactly as described above.

5.11 The second cycle is completed on Monday of the fifth week at 0800 at which time the fuzes are allowed to return to ambient temperature (approximately 70°F).

5.12 The fuzes shall then be examined and/or tested for conformance with 3.

5.13 The graph shown on Figure 1 indicates the changes in the cabinet temperature as a function of time. The shaded areas on portions of the graph showing changes in temperature are meant to indicate that any relation of temperature and time within these areas will be acceptable; however, it is desirable that the temperature rise be made as rapidly as practicable.

6. RELATED INFORMATION (not a mandatory part of this test)

6.1 Various temperature and humidity cycles have been in use by the Army and Navy for many years with the result that no real correlation between test conditions and actual storage conditions can be drawn. The basic 14-day unit of this test will be known as the "JAN temperature and humidity cycle" and it will be useful for many other applications as well as for fuze testing. The 14-day cycle was chosen as the basic unit because this period is a little shorter than that required to cause failure of mercury fulminate detonators which are still present in existing fuzes. It was recognized however, that future designs should not contain fulminate and thus should stand this more severe test or a minimum of two JAN temperature and humidity cycles (28 days).

6.2 The temperature extremes used in the cycle are based on the requirements of the publication specified in 7.1 and 7.2.

6.3 A relative humidity of 95 percent at the high temperatures is used because damage to certain typical elements is accelerated in the presence of moisture. It has been found through experiment that in the case of ordinary thread seals and other similar closures, moisture is transported into the interior of fuzes primarily through diffusion rather than by a "breathing process", although both occur. (See 7.1). However, there have been instances where moisture entry could have occurred only during the cooling period. For instance, in one assembly utilizing an "O"-ring gasket seal, a partial relief of the pressure differences (developed during cycling) occurred, a pressure differential being maintained after attainment of thermal equilibrium. In this situation diffusion would be excluded as the process for moisture transport and moisture entry would occur only during the cooling period. Thus, the results obtained by imposing a slow cooling period with maintenance of high relative humidity, would differ from those obtained when fuzes are allowed to cool at ambient humidity. Therefore, if a fuze has such seals, the designer should consider this point in running the test.

JAN TEMPERATURE AND HUMIDITY CYCLE

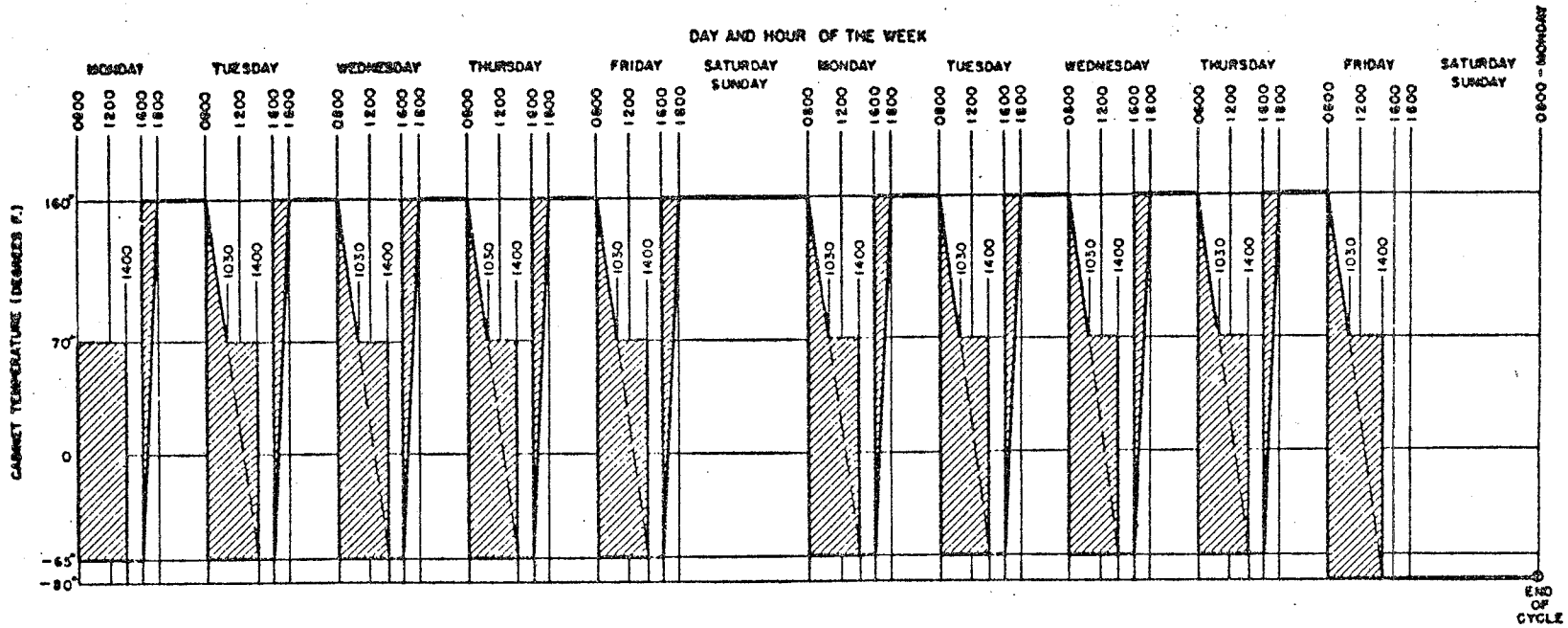

OPERATIONAL SCHEDULE

HOUR OF THE DAY	MONDAY	TUESDAY WEDNESDAY THURSDAY	FRIDAY	SATURDAY	SUNDAY	MONDAY TUESDAY WEDNESDAY THURSDAY	FRIDAY	SATURDAY	SUNDAY
			(FIRST WEEK-END)				(SECOND WEEK-END)		
0600	A	D	D	E	E	D	D	F	F
1200	A	D	D			D	D		
1400	B	B	B			B	F		
1600	C	C	C			C	F		

A - EXPOSE FUZES TO -65°F. CABINET TEMPERATURE BEFORE 1400.

B - MAINTAIN CABINET TEMPERATURE OF -65°F UNTIL 1600.

C - INCREASE TEMPERATURE OF AIR SURROUNDING FUZES TO 160°F (95% R.H.) AS RAPIDLY AS PRACTICABLE (CABINET MUST BE AT 160°F., 95% R.H. BY 1800).

D - DECREASE THE TEMPERATURE OF THE AIR SURROUNDING THE FUZES TO -65°F AT AN INITIAL RATE EQUAL TO OR GREATER THAN 36°F PER HOUR FOR THE FIRST 2 ½ HOURS. THE RATE MAY BE CHANGED THEREAFTER, BUT SHALL BE SUCH THAT -65°F. IS REACHED BY 1400 OR EARLIER.

E - MAINTAIN CABINET TEMPERATURE OF 160°F. (95% R.H.).

F - DECREASE TEMPERATURE OF CABINET TO -80°F. THIS TEMPERATURE TO BE MAINTAINED UNTIL THE NEXT OPERATION.

Figure 1.—JAN temperature and humidity cycle.

TEST 113

THERMAL SHOCK

1. PURPOSE

The thermal shock test is used during development of fuzes to determine whether the fuzes will withstand the effects of sudden changes in temperature.

2. DESCRITPION OF TEST

2.1 This test consists of subjecting the fuze to thermal shocks between the temperatures of minus 65 degrees Fahrenheit (F) and 160 degrees F.

2.2 The fuzes shall be completely assembled including all explosive elements which are a part of the fuze design.

3. CRITERIA FOR PASSING TEST

3.1 The fuzes must be safe and operable and no components or materials shall in any way be deformed, changed, or otherwise altered as a result of the test.

3.2 The decision that the fuzes have met, or failed to meet, the criteria is based on breakdown, inspection, or appropriate tests, together with engineering judgment.

4. TEST EQUIPMENT

4.1 The equipment required to conduct this test consists of chambers or cabinets designed to control the temperature. Single purpose chambers which will maintain only one temperature, one type for 160 degrees F ±4 degrees F and another type for minus 65 degrees F ±4 degrees F may be used. More versatile equipment which will provide both temperatures is also satisfactory. The 160 degrees F chamber must be capable of maintaining a relative humidity of less than 20 percent. This requirement can usually be met by an oven type cabinet in which room ambient air is heated to 160 degrees F. If the room air is less than 100 degrees F with a relative humidity of less than 95 percent and no water is added within the chamber, the condition will be satisfied.

4.2 Fans for circulating the air in the work space of the chamber must be capable of moving air at the rate of 20 ±5 times the volume of the chamber per minute when measured at 70 degrees F.

5. TEST PROCEDURE

5.1 The fuze will be placed in the chamber (preconditioned at minus 65 degrees F ±4 degrees F) for a minimum of four hours. Remove it and within twenty seconds place it in a chamber at 160 degrees F ±4 degrees F and less than 20 percent relative humidity for a minimum of four hours. This process is repeated until the fuze has been exposed to the low temperature and the high temperature three times as illustrated in Figure 1. In order for this test to be continued during off duty hours, the 4 hour soaking periods may be extended to a maximum of 65 hours at any point in the cycle.

5.2 The fuzes may be placed in any position but they must be adequately spaced from each other and from the chamber walls so that the specified air temperature will be maintained within plus or minus 4 degrees F. The test item shall be supported in the chamber on a shelf, rack, grating, or suspension system, composed of material which will not act as a heat conductor to retard or accelerate the temperature change of the test item. The material used to support the fuzes shall have a thermal conductivity of 0.4 or less British thermal units per hour per square foot per degrees F per inch of thickness at a mean temperature of 70 degrees F. The material in contact with the fuze shall be at least 1/2 inch thick and shall have a maximum cross sectional area of one square inch for each two pounds of weight of the fuze.

5.3 At the end of the test the chamber may be brought back to room temperature before the fuzes are removed.

6. RELATED INFORMATION (not a mandatory part of this test)

6.1 General. The temperatures used in this test are those that might be encountered in the natural environment. The duration employed is considered a safe margin for thorough saturation of the item. Experience indicates that in some component parts, particularly those molded of plastics, that stresses are incurred from the molding operation, and when these parts are subjected to sudden changes in temperature, ruptures may result. There are other instances where these stress conditions are increased because of metal inserts in plastic material which have different coefficients of expansion and contraction.

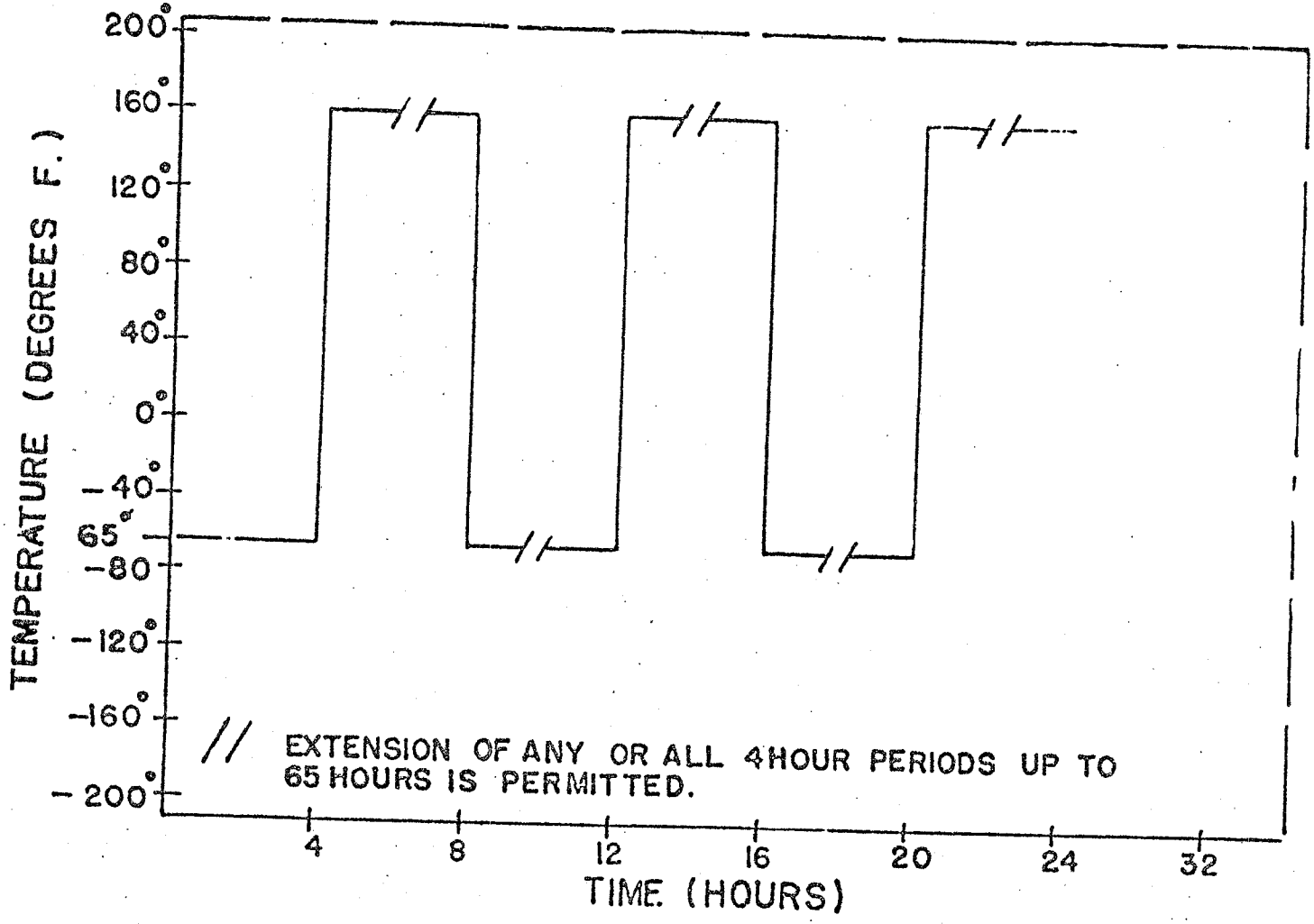

FIGURE 1. *Thermal shock cycle.*

APPENDIX F

SOME PHYSICAL AND MECHANICAL PROPERTIES OF NOMINAL 55-NITINOL*

PROPERTY	
Density, lb/in^3	0.234
Melting Point, ^oF	2390
Magnetic Permeability	<1.002
Mean Coefficient of Thermal Expansion (75^oF - 1652^oF) per $^oF \times 10^{-6}$	5.7
HARDNESS	
1742^oF (Furnace cooled)	$89^{R}B$
1742^oF (Quenched - R. T. water)	$89^{R}B$
TENSILE	
Ultimate Tensile Strength, ksi	125
Yield Strength, ksi	10 - 100
Elongation, %	60
Young's Mod., psi x 10^6	10.2
Shear Mod., psi x 10^6	3.6
Poisson's Ratio	0.33
IMPACT (Charpy)	
Unnotched (R. T.), ft-lb	155
Unnotched (-112^oF), ft-lb	160
Notched (R. T.), ft-lb	24
Notched (-112^oF), ft-lb	17
FATIGUE (Std. R. R. Moore Test)	
Stress (10^7 cycles-runout), ksi	70

*Tests were performed at room temperature, except where noted. Room temperature was below the Transition Temperature Range.

APPENDIX G

PROCESSING OF NITINOL THERMAL PIN

The steps leading to the preparation of the final Nitinol sensor element are as follows:

a. A Nitinol alloy was prepared with a Transition Temperature Range (TTR) in excess of 100°C. The charge composition for this alloy was 54.8 wt. % nickel with the remainder being titanium. This charge was arc-melted and remelted to insure a chemically homogeneous alloy. The final configuration of the alloy was a cast bar about 5/8 inch diameter x 4 inches long.

b. The arc-cast bar was hot swaged at 850°C into a rod about 0.180 inch in diameter.

c. The hot swaged rod was wire drawn, at room temperature using intermediate anneals, to a final diameter of 0.1 inch. The last cold reduction, following the last intermediate anneal, was in excess of 10% of the cross-sectional area.

d. Lengths of the cold drawn wire were hot "headed" by clamping the wire in a hardened steel split die. The upset conical head (90° included angle) was formed in the wire end by torch-heating the wire end followed by a sharp axial hammer blow. The die, shown in Figure G-1, allowed heads to be upset on both ends of the wire section.

e. Some of the samples (#3 through #10) were annealed at 550°C for 10 minutes at temperature.

f. All double-end samples were strained in uniaxial tension. The holding fixtures for adaption to the Olsen tensile test machine are shown in Figure G-1. Table G-1 summarizes the entire straining program. It should be noted samples 1 and 2 show large elastic recovery and require high loading to effect a 7% strain. The latter is the result of prior accumulated cold work and straining associated with the final area reductions in the wire drawing step (item c above).

Annealing samples 3 through 10 at 550°C for 10 minutes allowed easy low-load straining and minimal (<1%) elastic recovery.

g. One end of sample 3 was used to evaluate the heat recovery. Table G-2 summarizes the recovery behavior when heating with a hot air gun (>100°C) and then reheating in a butane-air torch. Under the initial strain of about 6% the #3 sample heat-recovered a total of 0.0225 inch over the 0.5 inch length.

h. The double-ended samples were cut as shown in Figure G-2. This provided two heat sensors from each strained double-end sample. Copious coolant was run over the double-end sample during abrasive cutting. This latter precaution was taken to prevent any local heating that would cause a partial recovery contraction or cause any of the material to be strained to be heated locally in excess of the TTR of the alloy during straining.

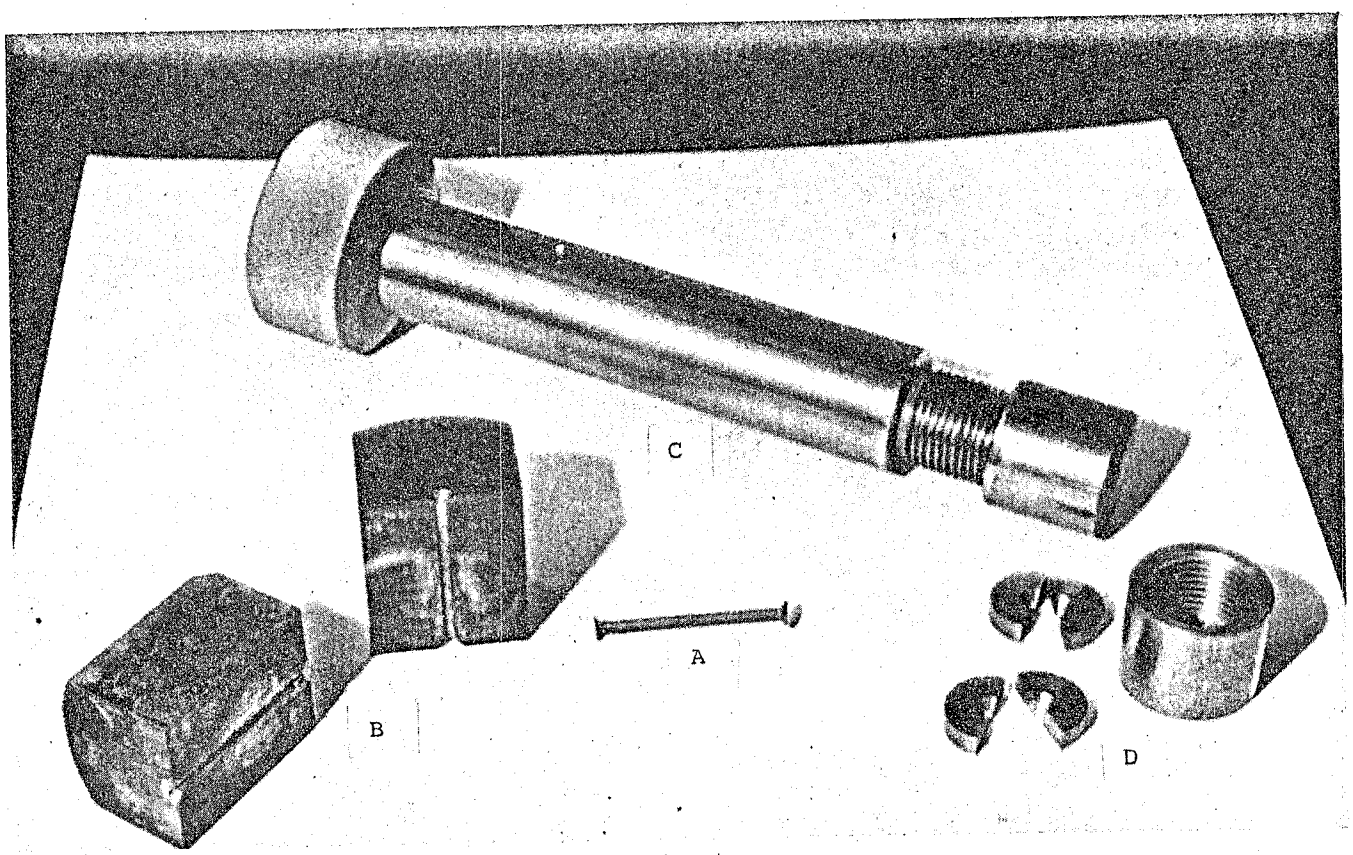

A = Double upset-end Nitinol wire specimen

B = Hardened steel split die used to form conical upset-ends

C = Tensile tester fixture holding bar

D = Adapter parts used to uniaxially strain Nitinol wire specimens

FIGURE G-1. TOOLING FOR PREPARATION OF PRE-STRAINED NITINOL THERMAL PINS

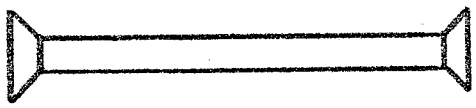

Before Straining

After 6% Strain

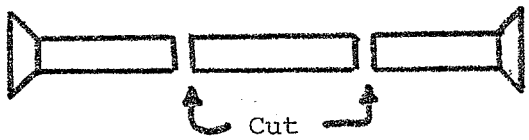

Two Finished Actuators

FIGURE G-2. PREPARATION OF PRE-STRAINED NITINOL THERMAL PIN ACTUATORS

TABLE G-1. DATA PERTAINING TO THE STRAINING OF 0.1 INCH DIAMETER NITINOL SENSOR ELEMENTS

Sample No.	Initial Load (lb) $E \approx 0$	Initial Distance* (in.)	Strain Data**			Post Strain Data***		Remarks
			Distance (in.)*	Strain (%)	Load (lb)	Length Unloaded (in.)	Permanent Strain (%)	
1	10	0.920	0.975	5.98	548	0.948	3.04	Wire was strained in the "as drawn" condition
2	10	0.913	0.968	6.02	508	0.943	3.29	" " " "
3	10	0.892	0.964	8.08	180	0.958	7.40	Annealed 550°C for 10 minutes. Approx. 8% strain
4	10	0.896	0.9587	7.03	156	0.9475	5.80	Annealed 550°C for 10 minutes.
5	10	0.889	0.951	6.97	184	0.944	6.19	" " " "
6	10	0.897	0.960	7.03	156	0.955	6.46	" " " "
7	10	0.889	0.951	6.98	156	0.948	6.64	" " " "
8	10	0.898	0.961	7.01	152	0.952	6.01	" " " "
9	10	0.893	0.9555	7.06	156	0.9465	6.04	" " " "
10	10	0.891	0.9533	6.95	156	0.9465	6.29	" " " "

*Based on distance between faces of holding fixture. Straining assumed to be uniform over entire length of specimum (see Figure G-2).

**Percent strain is defined as $\frac{\text{Length (final)} - \text{Length (initial)}}{\text{Length (initial)}} \times 100$

***These data are taken after "unloading" to 10 lb and "elastic" recovery has occurred.

TABLE G-2. HEAT INDUCED RECOVERY (BY CONTRACTION) OF NUMBER 3 SAMPLE

Sample No.	Strained Sample		Heat Source	Recovered Sample		Remarks
	Length* (in.)	Strain (%)		Length (in.)	Recovery (%)	
3-1	1.619	7.40	Hot Air Gun	1.569	76**	Slight bowing observed during contraction, final element straight
3-2	1.569	--	Reheat with Butane torch	1.565	82	6% additional/recovery at higher temperature

*Total length of entire specimen (see Figure G-2).

**Net thermal strain upon heating = 7.40 x 0.76 = 5.6%.

APPENDIX H

THERMAL SENSOR DESIGN SUMMARY

(Piezo-electric-Output Version)

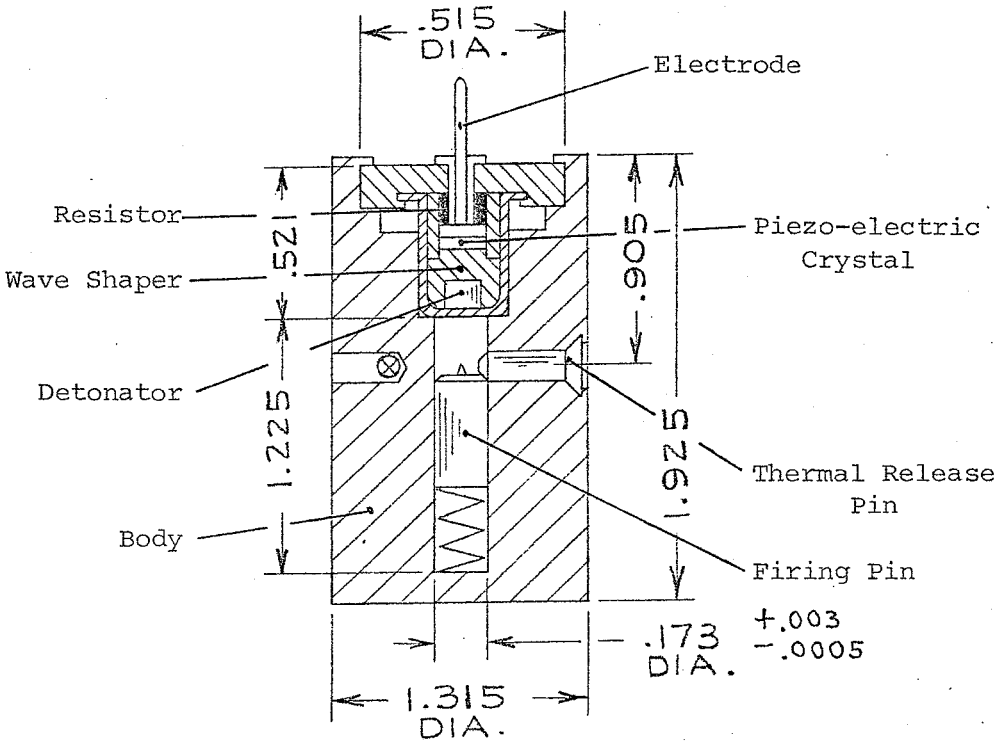

⊗ = Point of actuation-test temperature measurement

Thermal Sensor General Arrangement

PARTS LIST

Part	Material	Remarks
Resistor	Organic bonded carbon	Resistance between top and bottom surfaces to be 500K ± 250K ohms*
Piezo-electric	Ceramic, lead zirconate-lead titanate	Density 7.50 min.*
Nitinol pin	54.8 wt. % nickel 45.2 wt. % titanium	Strained approx. 6.2%; heat recovery ≅ 0.024 in. (0.500 in. gage length)
Firing pin	Stainless steel type 410	Rockwell C38-42, 0.168 diameter 63 surface finish
Electrode	Stainless steel type 303	Annealed and cold finished
Wave shaper	Aluminum alloy 6061-T6	
Detonator	15mg NOL 130 mix 60mg lead azide 19mg RDX	Navy Mk 95 Mod 0
Body	Stainless steel type 303	

*From Fuzing System Mk 1 Mod 0 specification.

FIRING PIN ENERGY AND VELOCITY CALCULATIONS

D = Firing pin movement distance, inches = 0.303

F = Firing pin spring force, pounds at:

Initial compressed height = 0.895

Final released height = 0.490

W_1 = Weight of firing pin, grams = 1.12

W_2 = Weight of spring, grams = 0.495

Firing Pin Energy

Energy = Average force x distance = $F_{AVG} \times D$

$$= \left(\frac{0.895 + 0.49}{2 \times 16}\right) (0.303)$$

$$= 11 \text{ oz} \times 0.303 \text{ in.}$$

$$= 3.33 \text{ in.-oz}$$

This value is well above the all-fire energy of 1.25 in.-oz for the Navy Detonator Mk 95 Mod 0 which applies for firing pin velocities in excess of 10 ft/sec.

Firing Pin Velocity

From $FD = \frac{1}{2} MV^2$ or $FD = \frac{1}{2} \frac{W}{g} V^2$ where W = weight of firing pin plus 1/3 weight of spring

$$\text{Average force x distance} = \frac{1}{2}\left(\frac{\text{Weight}_{\text{Pin}} + \frac{1}{3}\text{Weight}_{\text{Spring}}}{\text{Gravity Acceleration}}\right) \text{Velocity}^2$$

$$\left(\frac{0.895 + 0.49}{2}\right)\left(\frac{0.303}{12}\right) = (0.5)\left(\frac{1.12 + 0.165}{454 \times 32.2}\right) V^2$$

V = 19.6 ft/sec

COMPRESSION SPRING

Outside diameter	-	0.160 ± 0.005
Wire diameter	-	0.0150 ± 0.0003
Active coils	-	18
Total coils	-	20
Type of ends	-	Squared
Material	-	Steel, music wire
Direction of helix	-	Optional
Free length	-	1.070 ± 0.010

Stress relieve by heating to 500°F for 30 minutes.

DETONATOR MK 95 MOD 0

List of Drawings 549466, Weapon Specification 4997

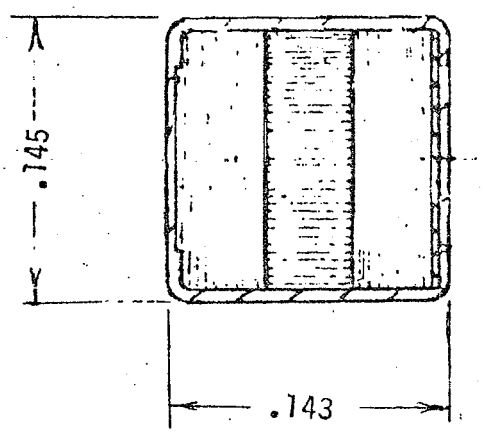

Cup Material - Aluminum

PERFORMANCE

Input Spec.	
All-fire	1.25 - 1.28 in.-oz
No-fire	(0.25 oz at 5 - 5.125 in.)
Firing Time	
Output	Indentation in steel: minimum of 0.008 in. for each and an average of 0.010 in.

EXPLOSIVE MATERIALS

	Wt. (mg)	P(psi)
NOL #130 mix*	15	70,000
Lead azide (PYA)	62	10,000
RDX	19	15,000

*Sb_2S_3	15%
$Ba(NO_3)_2$	20%
Lead azide	20%
B. lead styphnate	40%
Tetracene	5%

APPENDIX I

EXCERPTS FROM WEAPON SPECIFICATIONS
FOR ROCKEYE II IMPACT SENSING ELEMENT ASSEMBLY

Excerpts from WS 4998 (Revision M):

3. REQUIREMENTS

3.1 Description. - This device is an impact-sensing nose-mounted element, and is a part of the Fuzing System, Bomb, Mark 1 Mod 0 for the Bomb Mark 118 Mod 0 (Rockeye II Bomblet). A piezoelectric crystal is stressed upon target impact, imparting sufficient energy to initiate an electric detonator which is a part of the base fuze assembly.

3.2 No data is required by this specification, or by applicable documents referenced in Section 2, unless specified in the contract or order. (See paragraph 6.2.)

3.3.2 Power source, piezoelectric. - Piezoelectric Power Sources (crystals), purchased under this specification, shall conform to WS 4999.

3.3.3 Materials of construction. - The materials of construction, including finishes, shall be as prescribed on the drawings and other applicable documents.

3.4 Definitions. - For the purposes of this specification the following definitions are applicable.

3.4.1 Sensing element. - Unless otherwise designated, the term "sensing element" shall be interpreted to mean the completely assembled impact-sensing element.

3.5 Performance requirements and product characteristics. - The sensing element shall meet the following performance requirements and product characteristics.

3.5.1 Functioning. - When the striker assembly is subjected to the impact of a 3.0 pound weight, dropped from a height of 3.0 feet along the longitudinal axis of the sensing element, the shear washer shall be sheared, causing the firing pin to impinge the stab detonator. The resultant detonation shall stress the piezoelectric power source (crystal). The energy-output from the power source shall be sufficient to initiate a Detonator, Electric, Mk 96 Mod 0 conforming to WS 4996. In addition, the energy-output shall not be less than 7500 ergs. Measurement of the energy-output shall be made in a manner which has had prior approval of the procuring activity. Tests for conformance with this requirement shall be conducted as prescribed in 4.5.2.

4.5.2 Functioning test. - The sensing element shall be tested for conformance with the functioning requirement of 3.5.1 as herein specified. Sampling shall be on the basis of each production lot submitted for acceptance in accordance with MIL-STD-105 Inspection Level I. The sample of sensing elements shall be divided into two equal groups, Group A and Group B for this two-phase test. Production lots shall be accepted except for the following conditions:

a. Reject the lot if the combined number of Group A units with energy output below 5000 ergs and the number of Group B defectives exceed the AQL 1.0 percent defective.

b. Reject the lot if the combined number of Group A units with energy output below 7500 ergs and the number of Group B defectives exceeds the AQL 2.5 percent defective.

4.5.2.1 Group A test procedure. - Each Group A sensing element shall be mounted on a test fixture which simulates the assembly of the sensing element to the Bomb Mark 118 Mod 0, including electrical circuitry. The test assembly shall be placed in a safety chamber for testing. Electrical leads, twisted or paired together and no more than 6 feet in length, shall be connected from the sensing element to an insulated heater-type vacuum thermocouple (heater resistance 25.0 ohms). A fluxmeter shall be provided for measuring the output from the thermocouple. The fluxmeter shall be calibrated in ergs against the discharge from a 0.1 microfarad capacitor into the 25 ohm vacuum thermocouple over a range of capacitor charging voltages from 50.0 through 300.0 volts d.c. The application of excessive charging voltage will cause permanent damage to the thermocouple. The fluxmeter, thus calibrated, will permit calculation of energy-output from observed meter deflection. Test equipment which has been found satisfactory for use in this test is listed in 6.3. Any other test equipment, which has been approved by the procuring activity, may be used for this test. The striker assembly of the sample sensing element shall be subjected to the impact of a 3.0 pound weight dropped from a height of 3.0 feet along the longitudinal axis of the sensing element. If the shear washer fails to be sheared, or if the recorded energy-output is less than 7500 ergs, the sensing element shall be considered defective.

4.5.2.2 Group B. - Each Group B sensing element shall be assembled for testing as prescribed for the Group A samples. In place of the electronic test equipment of 4.5.2.1, the sensing element shall be connected to a Detonator, Electric, Mk 96 Mod 0, conforming to WS 4996. The detonator shall be mounted in a fixture which will accept the electrical leads of 4.5.2.1 from the sensing element. The assembly for testing shall be placed in a safety chamber. The striker assembly shall be subjected to an impact as prescribed in 4.5.2.1. If the shear washer fails to be sheared, or if the detonator is not initiated, the sensing element shall be considered defective.

Excerpts from WS 4999 (Revision F):

3.3 Performance requirements and product characteristics.- The Power Source shall meet the following performance requirements and product characteristics:

3.3.1 Piezoelectric coefficient.- The piezoelectric coefficient, d_{33}, shall be equal to or greater than 300×10^{-12} coulombs/newton when measured in accordance with 4.6.1.

3.3.2 Capacitance.- The capacitance of the Power Source shall be 320 ± 100 picofarads (pf) based on an aging time after polarization when measured in accordance with 4.6.2. Polarization date to be marked on each lot.

3.3.3 Energy output.- The Power Source shall be assembled in the Container Assembly (BUWEPS Dwg. 2423359) and the stab detonator of the container assembly shall be initiated by suitable means. The resultant detonation shall stress the Power Source and the resultant energy output of the Power Source shall be equal to or greater than 7500 ergs when tested in accordance with 4.6.3. (See 6.4).

4.4.1 List of equipment.- The following items of test equipment are required to perform the acceptance tests set forth in this specification:

4.4.1.1 Charge coefficient test equipment. - The contractor shall provide test equipment that will measure the Power Source charge coefficient d_{33}. The equipment shall meet the following requirements and shall have the approval of the Government prior to use. Substitute equipment may be used if approved by the procuring activity.

4.4.1.1.1 Element loading. - A force of 7510 grams ± 10 grams shall be applied evenly over the face of the Power Source. A means shall be provided to remove the load from the Power Source in a shock-free manner.

4.4.1.1.2 Element holder. - The element holder shall provide plated electrodes to contact the entire plated area of the power source electrodes. The holder faces that contact the Power Source shall be parallel and the design of the holder shall be such that the force exerted by the loading equipment is evenly distributed over the area of the Power Source. The electrodes of the holder shall be electrically insulated from the loading equipment. Terminals shall be provided for connecting the electrical measuring equipment to the element holder electrodes.

4.4.1.1.3 Capacitor. - The capacitor shall be low loss mica type and sealed. The value shall be 7,000 picofarads ± 5.0 percent. The exact value shall be measured when the capacitor is conditioned to a temperature of 75 ± 10 degrees F. and this value in farads shall be used in the test calculations.

4.4.1.1.4 Electrometer. - Input impedance, 1×10^{14} ohms; range, 10 millivolts to 100 volts; accuracy, ± 2.0 percent. (Keithley Model 610A or equal).

4.4.1.2 Impedance or capacitance bridge. - Capable of measuring a capacitance in the range of 200 to 450 picofarads to an accuracy of ± 2.0 percent at a frequency of 1000 cps.

4.4.1.3 Energy-output test equipment. - The following test equipment is required for the performance of the energy-output test of this specification. Substitute equipment may be used subject to the prior approval of the Government. (See 6.4).

4.4.1.3.1 Container Assembly (BUWEPS Dwg. 2423359). - All parts of the container assembly, except the Power Source, may be obtained from the prime contractor of the Impact-Sensing Element Assembly in the unassembled condition for assembly with the Power Source under test. (As required).

4.4.1.3.2 Test fixture. - A test fixture to simulate the assembly of the container assembly with the Impact-Sensing Element Assembly (BUWEPS Dwg. 2424974). The fixture shall incorporate a mechanism for initiating the stab detonator. The fixture shall be of sufficient strength and design that it will contain the explosion of the stab detonator.

4.4.1.3.3 Capacitor. - Capacitance shall be 0.1 microfarad ± 5.0 percent. The capacitor shall be of the low loss mica type and sealed. The exact value shall be measured when the capacitor is conditioned to a temperature of 75 ± 10 degrees F. and this value of capacitance shall be used in the calibration of the fluxmeter.

4.4.1.3.4 Thermocouple. - Insulated heater type vacuum thermocouple with a heater resistance of 25.0 ohms. Maximum charging voltage, 300 volts dc. (Vacuum Thermocouple, Standard Line No. 16 as produced by American Thermocouple Co. Los Angeles, California or equal).

4.4.1.3.5 Fluxmeter. - (Model FM as produced by the Sensitive Research Corporation, New Rochelle, New York or equal).

4.6.1 Piezoelectric coefficient test. - Connect and assemble the equipment of 4.4.1.1 as shown in Figure 1. Connect a shorting switch across the capacitor and close the switch so that the capacitor is shorted out. Apply the 7510 gram load to the Power Source. Open the shorting switch and then remove the load from the Power Source. Record the voltage indicated on the electrometer. Measure the capacitance of the Power Source in accordance with 4.6.2 and record this value in farads. Compute the piezoelectric coefficient, d_{33}, from using the following formula:

$$d_{33} = \frac{102\ (C_1 + C_2)\ V}{F}\ \frac{\text{coulombs}}{\text{newton}}$$

C_1 = Capacitance of capacitor measured in 4.4.1.1.3 in farads.

C_2 = Capacitance of the Power Source in farads.

V = Voltage indicated on electrometer.

F = Load in grams

102 = Conversion factor for grams to newtons.

The d_{33} coefficient shall be equal to or greater than 300 x 10^{-12} $\frac{\text{coulombs}}{\text{newton}}$

4.6.2 Capacitance test. Using the impedance bridge of 4.4.1.2, measure the capacitance of the Power Source. The capacitance shall be measured and be within 320 ± 100 picofarads at an aging period of 100 ± 50 hours after polarization. The capacitance shall not age downward greater than 8 percent per decade of time if tested after the 100 ± 50 hour inspection time.

4.6.3 Energy-output test. - The Power Source shall be assembled into the container assembly of 4.4.1.3.1 and the container assembly mounted in the test fixture of 4.4.1.3.2 that simulates the assembly of the container assembly into the impact-sensing element assembly. The test shall be conducted with the test fixture placed in a safety chamber that will adequately protect personnel and equipment external to the chamber. Electrical connections or mechanical linkages that pass through the walls of the safety chamber shall do so in an explosion-proof manner. The Power Source shall be electrically connected, with leads twisted or paired together and no more than 6 feet in length, to the insulated heater-type vacuum thermocouple (heater resistance 25.0 ohms) of 4.4.1.3.4. The fluxmeter of 4.4.1.3.5 shall be connected to measure the output from the thermocouple. The fluxmeter of 4.4.1.3.5

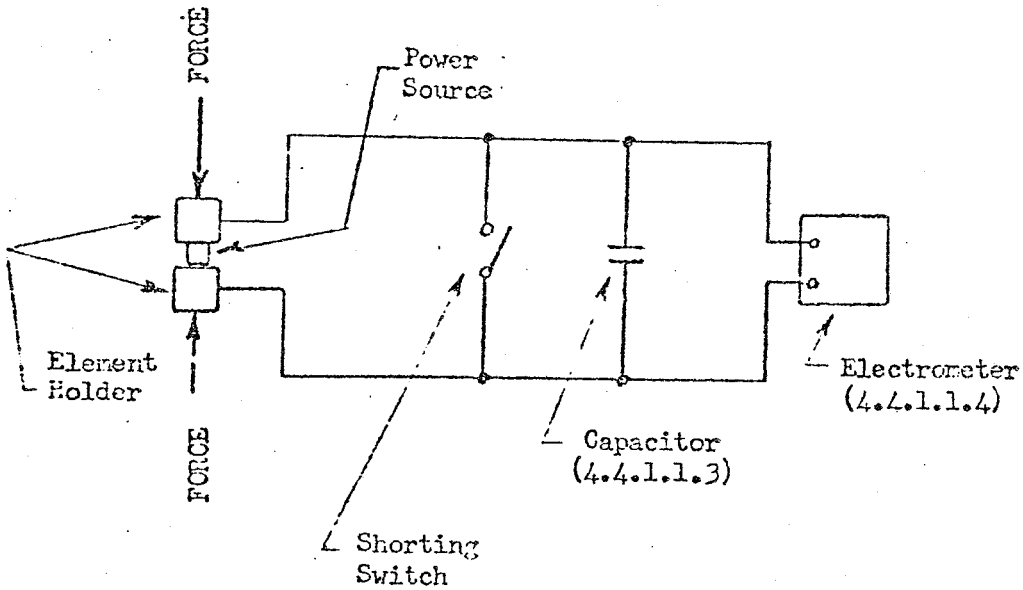

PIEZOELECTRIC COEFFICIENT
TEST CIRCUIT
Figure 1

shall have been previously calibrated in ergs against the discharge from the 0.1 microfarad capacitor of 4.4.1.3.3 into the 25 ohm vacuum thermocouple of 4.4.1.3.4 over a range of capacitor charging voltages from 50.0 through 300.0 volts dc. CAUTION: The application of excessive charging voltages will cause permanent damage to the thermocouple. The fluxmeter, thus calibrated, will permit calculation of energy-output from the observed meter deflection when the stab detonator is initiated. The energy-output of the Power Source shall be equal to or greater than 7500 ergs or the Power Source shall be considered defective. (See 6.4). See 6.3 for general safety precautions.

APPENDIX J

REPRESENTATIVE PULSE THERMAL BATTERY CHARACTERISTICS FOR SENSOR OUTPUT

Number of cells	5
Electrical system	Magnesium/Lithium-Potassium Chloride/Vanadium Pentoxide
Heat pad active material	Zirconium/Barium Chromate
Length	0.7 inch
Diameter	0.7 inch
Weight	24.0 grams
Case	Steel, solder seal
Output (1 ohm load; -65 to +160°F)	
Voltage	0.2 second - 4 volts; 0.5 second - 5 volts
Current	5 amperes
Life (to 80% voltage)	>3.0 seconds
Input	
Primer (stab, Mk 102 type, NOL 130 mix pressed at 70,000 psi)	1.25 in.-oz all-fire
Shelf life, uncontrolled conditions	>20 years
Reliability	99.9%

APPENDIX K

MILD/CONFINED/SHIELDED DETONATING CORD TECHNICAL BACKGROUND WITH REFERENCE TO ON-CAR COMMUNICATION LINK APPLICATION

Mild Detonating Cord (MDC) consists of a cord of explosive in a tubular metal (lead, aluminum or silver) sheath. The sheath provides sufficient confinement to assure reliable detonation wave propagation along the cord at explosive loadings in the 2½-grain/foot range. This assembly is also known as mild detonating fuze (MDF). A typical diameter is 0.080 inch over the metal tube.

Confined Detonating Cord (CDC) consists of MDC in another sheath of tough material (e.g., braided fiberglass) sufficient to prevent escape of any significant explosive effects as the detonation progresses along the cord. It is used in applications where effects of the inner sheath material ejected laterally (at about 1000 ft/sec) and of the escaping explosive products would be unacceptable.

Shielded Mild Detonating Cord (SMDC) consists of MDC in a sheath (e.g., stainless steel tubing) providing confinement as in CDC and also armoring the cord against external abuse.

Explosives which have been used include PETN, RDX, DIPAM and HNS. RDX is considered suitable for Navy applications where high temperature resistance is not a factor, but HNS (hexanitro stilbene) provides exceptional thermal stability (to 350°F for long-term exposure and to 500°F for short periods) and thus provides maximum assurance of essentially unlimited service life under adverse or uncontrolled storage conditions. The amount of explosive used is so small that the current price of HNS (c. $100 per pound) is acceptable.

Initiation of MDC can be effected only by the shock of an explosive initiator. It therefore does not in itself impose any restrictions as to exposure to fire, fragments, electro-magnetic effects, static electricity or other extreme environments. CDC

assemblies have withstood all applicable MIL-STD-331 tests without difficulty.

Detonation Velocity is essentially the same as for the bulk high explosive used in the particular cord--about 22 to 25,000 ft/sec. Decrease in this detonation velocity is a sensitive measure of incipient degradation of cord reliability under long-term storage or adverse environments.

Shelf Life of the HNS MDC is expected to be essentially unlimited; specimens stored under uncontrolled magazine conditions for seven years to date have shown no evidence of deterioration.

Transition Fittings or Couplers are required for the transfer from the explosive input element to the cord, from one section of cord to another (as at a tee joint), and from the cord to the output explosive element (detonator or actuator). These typically contain an explosive section tapering from the cord explosive diameter (0.040 inch) to 0.125 inch or larger at the acceptor/donor (external interface) end. Aircraft hydraulic (3/8 - 24) tubing fittings are commonly used for SMDC assemblies.

Production Cost Background - Large-production experience on long-run elements (4 to 50 feet--such as would be used in the anti-derailment sensor application) is somewhat limited. The present price of 2½-grain MDF in 200-foot sections is about $1.00 per foot. Manufacturer's complete assembly prices/price estimates for short (3 inches) elements (2½-grain HNS, aluminum tube, polyethylene jacket) MDF (including end transition fittings) in an NOL high-production application are as follows:

112,000 units -	$1.24 (actual)
5,000,000 units -	.48 (projected)
9,000,000 units	.35 (projected)

A variety of longer SMDC units for aircraft emergency escape applications have been made in moderate quantity (300,000 total to date) at an average price of $40 per unit. This includes expenditure of a very large proportion of manufactured units in acceptance tests to demonstrate extremely high reliability in all lots.

Because of the amount of labor involved in the current production process for the cord itself, significant further price reductions are likely, but the ultimate cost is difficult to predict closely at this stage.

Flexible SMDC has been made with a stainless steel braided sheath, for use where bending is required for installation and periodic disassembly, and the MDC (HNS) explosive itself withstands bending around a one-inch mandrel without affecting subsequent reliability of propagation. However, the limits of continual flexing for long-term integrity of the MDC have not been established to the degree that a design could be considered reliable without considerable verification by test.

APPENDIX L

PIEZO ELEMENT ON-CAR COMMUNICATION LINK SYSTEM
TEST SET-UPS AND CALIBRATION

NOTE: Except for (3), all test set ups used 25 feet of No. 16 stranded wire taped side by side

(1)

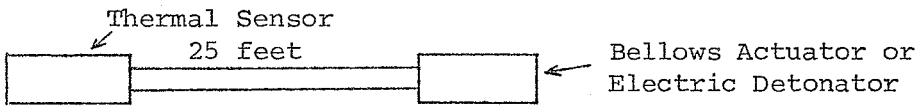

(2)

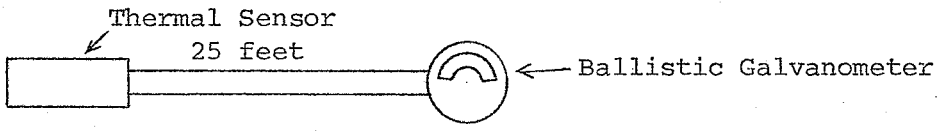

(Test to determine energy output from thermal sensor crystal after calibration of ballistic galvanometer.)

(3)

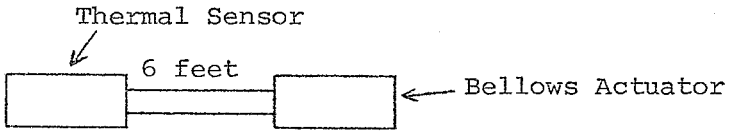

(Test to determine effect of wire length on energy output from thermal sensor crystal.)

(4)

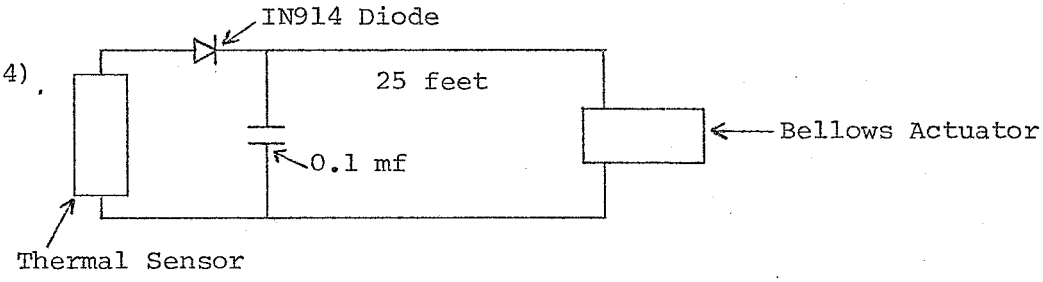

(Test attempt to match the high impedance of the thermal sensor crystal ($\cong 200K\Omega$) with the low impedance ($\cong 5\Omega$) of the bellows actuator and to release the crystal energy at the peak.)

(5)

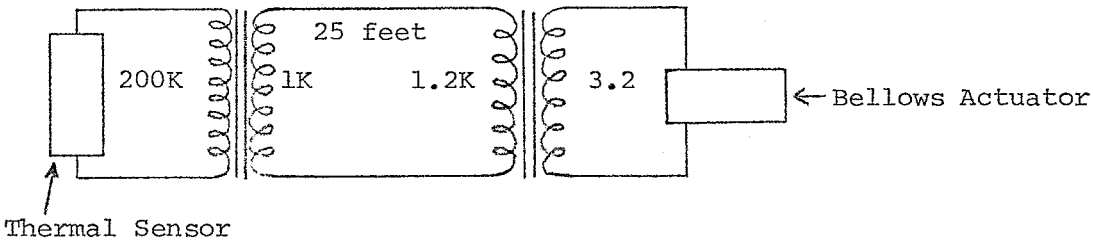

(Test attempt to match the high impedance of the thermal sensor crystal with the low impedance of the bellows actuator.)

(6)

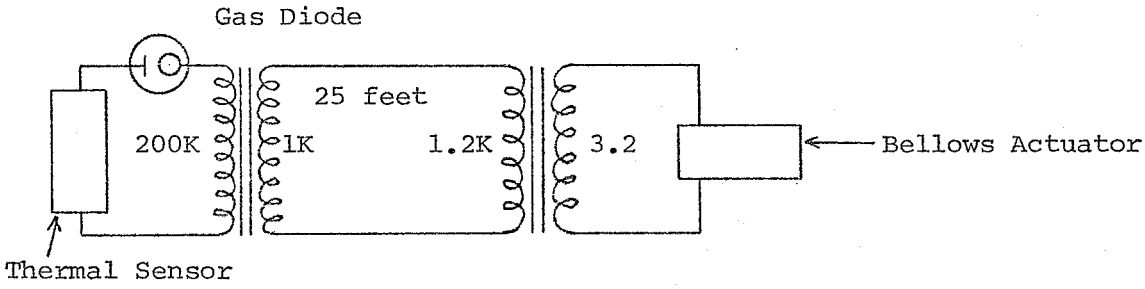

(Test attempt to match the high impedance of the thermal sensor crystal with the low impedance of the bellows actuator and to release the crystal energy at the peak.)

Crystal Output Energy Test

The output energy from the crystal in the thermal sensor was measured on a ballistic galvanometer that was calibrated in the following manner: a 0.1 mf capacitor was charged with a DC power supply. The charge on the capacitor was then switched through a 25-ohm vacuum thermocouple into the ballistic galvanometer and the deflection was noted. A curve of input energy (ergs) versus output deflection (millimeters) was then plotted. The vacuum thermocouple was used as a gage to simulate the resistance characteristics of the bellows actuation bridge wire as it heats up to the firing point of the ignition drop. Deflection readings were taken with very short wire leads and with 25-foot wire leads to see if the lead length had any effect on the output energy (it did not). Calibration data was recorded as follows:

Short Leads

DC Input Voltage	Capacitance (mf)	Input Energy (ergs)	Galvanometer Deflection (mm)*
50	0.1	1,250	5.0
71	0.1	2,500	10.0
100	0.1	5,000	18.0
123	0.1	7,500	26.5
141	0.1	10,000	33.5

25-Foot Leads

50	0.1	1,250	5.0
71	0.1	2,500	9.0
100	0.1	5,000	17.0
123	0.1	7,500	25.5
141	0.1	10,000	33.5

The thermal sensor in test No. 2 was then actuated and the output energy was fed into the above ballistic galvanometer. The deflection was noted (greater than 50 mm) and the output energy read from the calibration curve.

*25-ohm vacuum thermocouple No. 16
Ballistic galvanometer No. 009819

APPENDIX M

BELLOWS MOTOR CHARACTERISTICS

Typical Bellows Motor Configuration

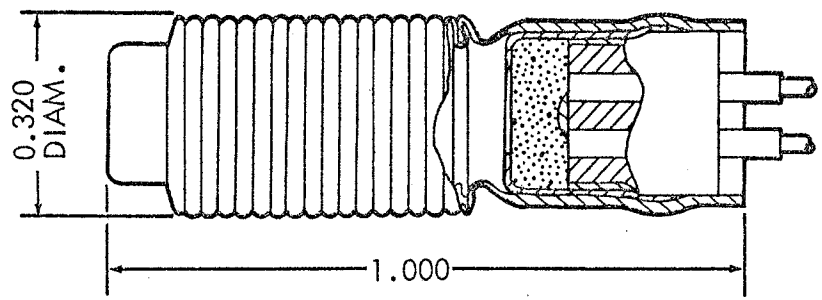

Identification	(Navy) Driver, Explosive, Bellows Mk 15 Mod 0	(Navy) Driver, Explosive, Bellows Mk 20 Mod 0	(Army) (Squib) Bellows Motor, Explosive M6
Initial Length (plus wire leads)	1.00 in.	0.983 in.	1.00 in.
Expanded Length (at 600 psi)	2.00 in.	2.0 in.	2.0 in.
Driving Force	> 10 lb	> 10 lb	> 10 lb
Explosive Element: Contents	Normal lead styphnate - 1.5mg (spot); LMNR/black powder 75/25 55mg	Normal lead styphnate - 2 to 6mg; LMNR/black powder 35/65 50mg	Lead styphnate ignition; lead/selenium/nitro starch propellant

Identification	(Navy) Driver, Explosive, Bellows Mk 15 Mod 0	(Navy) Driver, Explosive, Bellows Mk 20 Mod 0	(Army) (Squib) Bellows Motor, Explosive M6
Electrical Ignition Element:			
Resistance	Wire bridge 4 to 6 ohms	Wire bridge 5 to 9 ohms	Carbon bridge 750 to 15,000 ohms
All-Fire Energy	14,400 ergs (1.2V, 0.3r)	5000 ergs (0.68 mfd at 38.5V)	605 ergs (0.04 mfd at 55V)
Case	Brass	Brass	Brass
Seal	Hermetic (glass/ solder)	Hermetic (glass/ solder)	Phenolic
References:			
Specification/ Purchase Desc.	(Navy) WS 1905 NOL	(Navy) WS 6715 NOL	(ORD Corps) TL-PD-23
List Drawings	548264	549977	FB 31679 A and B

Extension Time: Typically 25 to 30 milliseconds.

Reliability: Demonstrated bellows motor reliability, as is the case for all one-shot elements, is primarily a function of the proportion of the quality control methods employed and of units expended in initial and periodic production destructive tests. Reliability in excess of 99.9% can be maintained.

Environmental Considerations: Operation to specified output forces/distances is typically maintained over the -65 to +160°F limits. Hermetically sealed units have essentially complete resistance to moisture in storage; the M6 phenolic seal is reported to withstand 100 psi water pressure for 24 hours, indicating probable long life under normal uncontrolled-humidity conditions. Some of the propellant mixes may eventually show some deterioration at continuous storage above +120°F.

APPENDIX N

NOISELESS BUTTON BOMBLET (NBB) CHARACTERISTICS
(T-1151(V)/GSQ)

Excerpts from Sections II-B2 and II-B16 of Defense Special Projects Group "Systems Design Description" Report of 20 August 1971 (other portions of which may contain material not yet declassified).

Functional Use - The NBB and the associated Relay Receiver (RR) of the ARFBUOY III form a Radio Frequency (RF) transmission link by which the presence of an intruder is announced. The NBB, an expendable miniature RF transmitter, transmits a unique signal when disturbed. The RR is packaged in an expendable hand-emplaced sensor, the Automatic Radio Frequency Buoy (ARFBUOY). When the NBB signal is received by the RR, the ARFBUOY reports the detection by transmitting an ID code.

RF Range - The NBB will transmit a minimum distance of 100m through dense-jungle foliage. Range of 1500m or more can be expected in areas of little or no foliage. Even greater ranges will result if the NBB's are not resting on the ground but are held several feet above ground.

Environmental Characteristics - The NBB is a sealed unit designed to survive in a Southeast Asia environment and is capable of operating over a temperature range of $+32^{\circ}$ to 135°F. The use of mercury battery prevents operation below $+32^{\circ}$F.

Physical Characteristics - The NBB is a small ruggedized reusable electronic device camouflaged by encapsulating the electronics in a thixotropic epoxy coated with the camouflage material. The electronics

of the NBB are contained in a volume of approximately 1.2 cubic inches and weigh approximately 1 ounce.

Design Features - The NBB is a battery-powered miniature radio transmitter designed for mass production. See Figure N-1 . The NBB includes a disturbance switch (normally open) which momentarily closes when the NBB is stepped on or moved. This action allows the battery to charge a capacitor which drives the voltage controlled oscillator (VCO) and power amplifier. The battery is connected directly to the oscillator and power amplifier but all transistors are in their off state unless there is sufficient voltage on the VCO drive capacitor to sustain oscillation. Each emission (see Figure N-2) consists of an RF signal sweeping between approximately 138 and 144 MHz at rates between 0.66 and 4.0 MHz/sec. The transmitter signal strength is at a low power due to the limitations imposed by the NBB's small size and life requirements. Three RM-41 mercury cells provide power for both the VCO drive capacitor and the oscillator-power amplifier circuit. Peak currents, up to 80 ma, will occur as the frequency sweeps through the tuned frequency of the power amplifier and antenna. The current drain will be negligible (transducer leakage currents) after a nominal 5 to 7 seconds.

Reliability - The calculated reliability is 0.999 for 45 days operation and 0.991 for 90 days operation. The NBB has exceeded this requirement in laboratory and field tests.

Maintainability - The NBB is an expendable device and has no specified MTBF. The NBB is encapsulated in epoxy and is not repairable. Maintenance is limited to checking for defects and/or non-operation.

Interface Design - The RR of the ARFBUOY III is designed to receive and detect the unique NBB signal. The RR is a fully transistorized unit which has excellent signal sensitivity. The NBB has sufficient

output power to achieve the 100m minimum range through dense jungle foliage. The ARFBUOY transmits an ID code to a monitoring station whenever it detects the NBB signal.

Special Testing - No special test equipment is to be provided for field checkout of the NBB. A simple Go/No Go Test can be performed at the time of deployment. Receipt of the NBB signal by the ARFBUOY would verify operation.

Signal Processing in the RR - The RR module contains a basic triple-conversion, superheterodyne receiver and logic circuitry to detect and confirm occurrence of a radio signal from an NBB. The NBB radio signal is a sine wave whose frequency sweeps from about 138 to 144 MHz at a rate between 0.6 and 4.0 MHz/sec. The receiver does not follow the sweep continuously but looks at three discrete frequency windows. These windows are effectively generated by three separate oscillators keyed by timing in the logic circuitry to "track" the NBB characteristic signal. The "window/track" action occurs at the second stage of IF mixing and amplification. When a signal is received at the first frequency (F_1) window the receiver is switched to the second frequency (F_2). If a signal is received at this second window within specified time limits, the receiver is switched to the third window (F_3). The logic circuits generate power supply and Encoder "call-up" when a signal is received in the third frequency window. There is a short dead time immediately after the receiver is switched to a new frequency to allow switching transients to die out and the receiver to stabilize. The dead time is followed by a reject time during which the circuit will revert to the standby state. If a signal is received during the accept time, the dead, reject, and accept cycle will be repeated at the third frequency window. If a signal is not received during any one of the accept periods, the receiver reverts to the standby state. The RR is ready to process a new signal within 95 to 950 ms after detecting a previous signal.

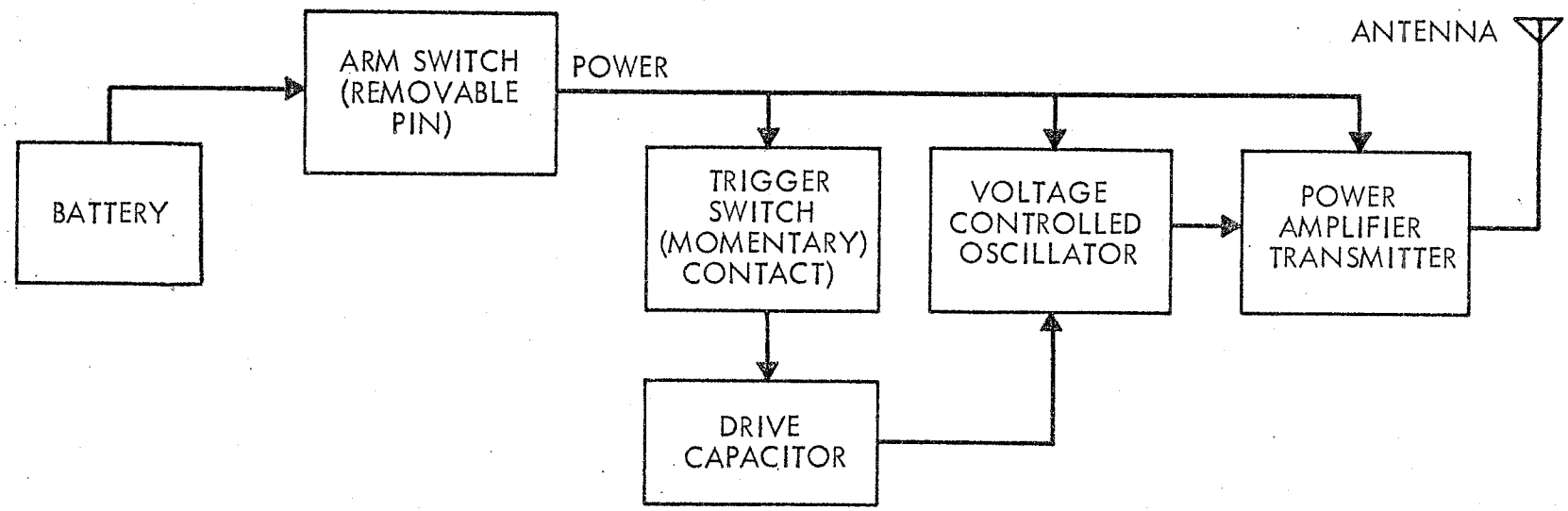

FIGURE N-1. NBB FUNCTIONAL BLOCK DIAGRAM

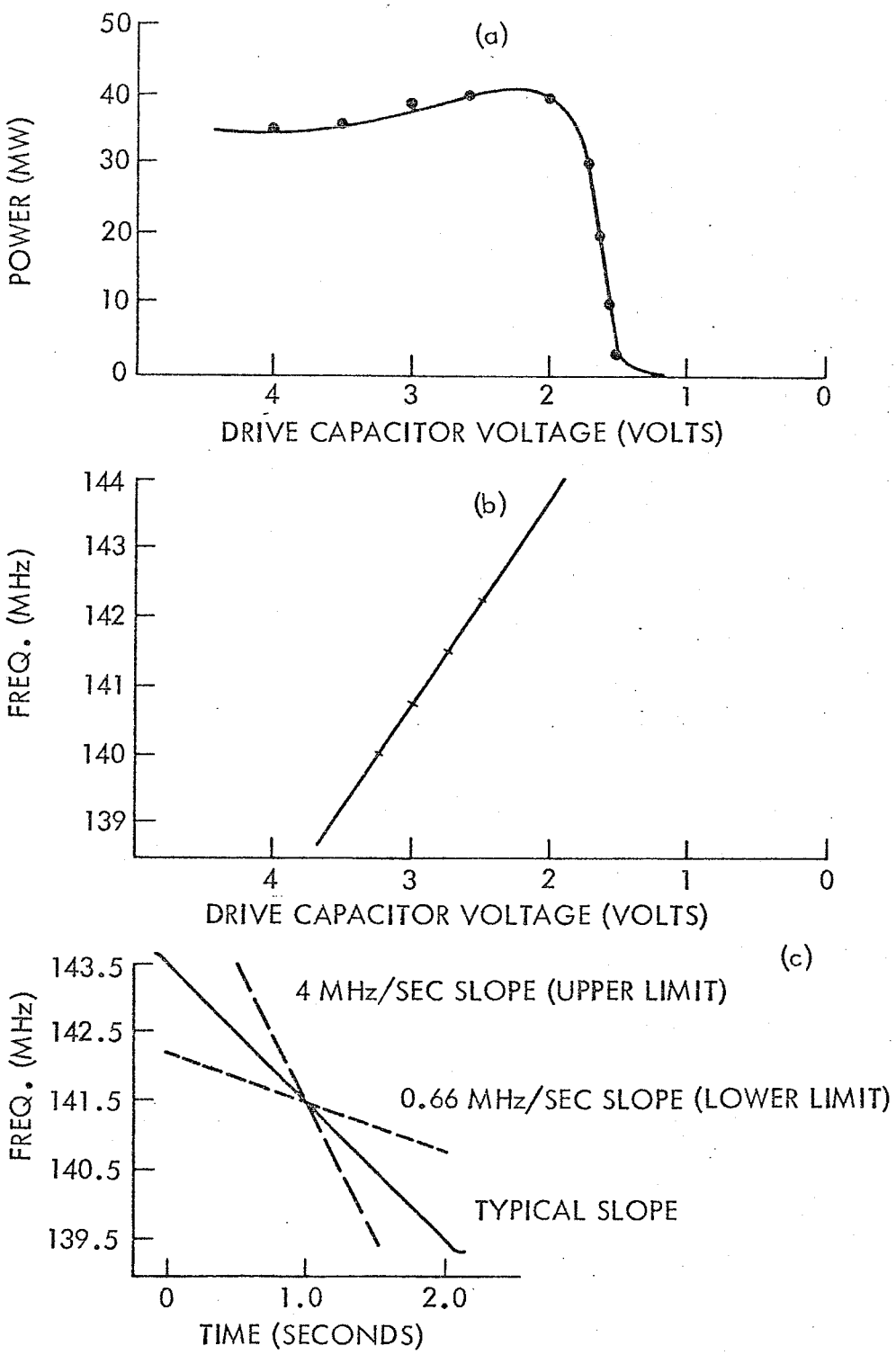

FIGURE N-2. NBB CHARACTERISTIC CURVES

APPENDIX O

WESTINGHOUSE AIR BRAKE CO., WILMERDING, PA.

RACK DEMONSTRATION
ABD FREIGHT EQUIPMENT
JULY 20, 1972

CONDITIONS: 150 Car Train - 50 Ft. Cars - 80 psi Brake Pipe
26-C Brake Valve - Minimum Leakage (Tests 1 Thru 8 and 13 Thru 15) - 5 psi Leakage (Tests 10 Thru 12)

TEST NO.	MANIPULATION	DATA
1	Make a minimum brake pipe reduction, hold 1 minute, increase reduction to 15 psi - then release	Application Time - 18 seconds Release Time - 13 seconds
2	Recharge to within 5 psi of full charge.	Time - 2 min. Flow Indicator Readings: (a) 2 min. after B.V. in Rel. - 2-3/4 (b) 6 min. after B.V. in Rel. - 3/4
3	Emergency Application	Application Time - 7.7 seconds
4	Attempt to release before vent valve closes.	Note: B.P. blows @ vent valve exhaust.

RACK DEMONSTRATION
ABD FREIGHT EQUIPMENT
JULY 20, 1972

TEST NO.	MANIPULATION	DATA
5	Release of Emergency Application	Release Time - 2 min. 28.6 seconds Flow Indicator Readings: (a) 3 min. after B.V. in Rel. - 6-1/2 (b) 10 min. after B.V. in Rel. - 2-3/4 (c) 15 min. after B.V. in Rel. - 1-1/4 (d) 20 min. after B.V. in Rel. - 1/4
6	With the train recharged - Brake valve in release, open a 5/32" choke to atmosphere @ rear of Car 100 - Observe train.	Flow Indicator Readings: (a) Before choke opening - 1/2 below scale (b) 5 min. after choke opening - 0 NOTE: No brakes applied.
7	Same as Test #6 except open an 11/32" choke to atmosphere - Observe Q.S. activity - Hold for 5 minutes, observe train.	Flow Indicator Readings: (a) Before choke opening - 1/2 below scale (b) 2 min. after choke opening - 5 (c) 5 min. after choke opening - 8 NOTE: All cars applied except Cars 1 thru 3, which blew at the quick service exhaus
8	With the train recharged - Brake valve in release, open a 29/64" choke to atmosphere @ rear of Car 100 - observe train.	NOTE: Emergency application

RACK DEMONSTRATION
ABD FREIGHT EQUIPMENT
JULY 20, 1972

TEST NO.	MANIPULATION	DATA
9	With the brake valve in release, train not fully charged, make a caboose valve application, hold for 3 minutes, then make a caboose valve emergency.	Flow Indicator Readings: (a) Before Application - 1/4 (b) After Application and Pos. #1 for 3 min. - 1-1/2
10	With leakage in train, make terminal test.	Flow Indicator Reading: Before Application - 1-1/2 NOTE: 5 psi/min. B.P. leakage measured from 65 psi B.P. pressure.
11	Recharge train, make a minimum reduction, hold 1 minute, increase to a 15 psi reduction, hold 1 minute then release (5 psi/min. Leakage)	Flow Indicator Reading: Before Application - 1-1/2 Application Time - 11.20 seconds Release Time - 16.06 seconds Flow Indicator Readings: (a) 5 min. after B.V. in Rel. - 4 (b) 10 min. after B.V. in Rel. - 3-1/4

RACK DEMONSTRATION
ABD FREIGHT EQUIPMENT
JULY 20, 1972

TEST NO.	MANIPULATION	DATA
*12	Recharge to within 5 psi of full charge. (5 psi/min. Leakage)	Recharge Time - 2 minutes
13	With the train recharged, brake valve in release, open an 11/32" choke to atmosphere at rear of locomotive.	Time / Flow Indicator / B.P. Car 1 / B.P. Car 150 1 Min. / Off Scale / 74 / 74 12 Min. / Off Scale / 74 / 74 NOTE: All cars applied to 10 psi brake cylinder pressure.
14	With the train recharged, brake valve in release, open an 11/32" choke to atmosphere at rear of Car 51.	Time / Flow Indicator / B.P. Car 1 / B.P. Car 150 1 Min. / 7-3/4 / 78 / 60-1/2 12 Min. / Off Scale / 77-3/4 / 42-1/2 NOTE: All cars applied except Car 1. This car blew at the quick service exhaust.

* Test not made; data from previous tests.

RACK DEMONSTRATION
ABD FREIGHT EQUIPMENT
JULY 20, 1972

TEST NO.	MANIPULATION	DATA			
		Time	Flow Indicator	B.P. Car 1	B.P. Car 150
15	With the train recharged, brake valve in release, open an 11/32" choke to atmosphere at the rear of Car 100.	1 Min.	4-1/2	79	49
		12 Min.	8-3/4	78-1/2	31
		NOTE: All cars applied except Cars 1, 2, & 3 which blew at the quick service exhaus			
		Time	Flow Indicator	B.P. Car 1	B.P. Car 150
16	With the train recharged, brake valve in release, open an 11/32" choke to atmosphere at the rear of Car 150	1 Min.	4	79	36
		12 Min.	6-3/4	79	25
		NOTE: All cars applied except Cars 1 thru 4 and 6. These cars blew at the quick service exhaust.			

APPENDIX P

DESIGN OF DIAPHRAGM CUTTER AND EXPLOSIVE ACTUATOR

Excerpted from NOLTR 72-244

General Purpose: An explosively actuated diaphragm cutter has been developed. Because of the requirements imposed by MIL-I-23659, the explosive component is a one-amp/one-watt no-fire device. An industrial survey was initially conducted, but no commercially available cutter could meet these requirements.

Description of Components: The diaphragm cutter, which is shown in Figure P-1, consists of a one-amp/one-watt no-fire explosive actuator, a cutter, a retainer, an O-ring, and a housing. The cutter, made of hardened steel, has a slanted cutting edge so that only a small portion of the diaphragm is being cut at any instant. The cutter is held by the aluminum retainer which keeps it stationary prior to and after activation. The O-ring contains any explosive debris from contaminating the chlorine. The housing sustains the pressure generated by the actuator and has threaded ends to fasten the complete diaphragm cutting device to the storage vessel.

One-Amp/One-Watt No-Fire Actuator: As shown in Figure P-2, the actuator is hermetically sealed by soldering the cup to the eyelet of the glass/Kovar plug. An Evanohm bridge element is soldered to the lead wires as shown in Figure P-3. This bridgewire element is designed to withstand an electrical current of one ampere or to dissipate one watt of electrical power for five minutes without igniting the propellant. The technique used to avoid static electricity hazard is to provide static discharge paths between the sharp points on the bridge's saw-tooth perimeter and the charge holder. As shown in Figure P-2, the propellant, barium styphnate, does not physically come in contact

with the perimeter of the bridge. This plug is identical to that used in the Detonator Mk 101 and withstands the discharge of a 500 pfd capacitor at 30,000 volts without initiation of any explosive element.

Bridge resistance is one ohm. All-fire current is approximately 3 amperes. Actuation time at 5 amperes is less than 0.050 second. The glass-Kovar plug has withstood underwater immersion for two years without failure or leakage.

The final design has a total of 110 mg of barium styphnate, 90 mg in the cup loaded at 5,000 psig and 20 mg in the charge holder loaded at 10,000 psig. The tests indicated that the final design of the actuator meets the one amp-one watt requirement and has the appropriate driving power.

Diaphragm Cutter Development Tests: When the design of the actuator was completed, it was assembled into a complete diaphragm cutter for development testing. The tests performed were static force tests, pressure bomb tests, penalty tests, functioning tests, maximum flow tests, and transportation vibration tests.

Static Force Tests: These tests indicated that an effective shear force of 26,000 psi was sufficient to cut the type 304 stainless steel diaphragm at thicknesses in the 0.020 to 0.025 range with the slanted cutting edge. Cutter material is hardened type 01 tool steel.

Penalty Tests: In order to assure the diaphragm cutter's performance, it was required to cut diaphragms 0.035-inch (0.0889 cm), 0.040-inch (0.1016 cm) and 0.042-inch (0.1067 cm) thick. In each case the cutter gave a clean cut.

Functioning Tests: A total of ten complete units were tested. On four of these tests a pressure of 100 psig was applied to the opposite side of the diaphragm. All ten units functioned properly.

Vibration Tests: In order to determine the ruggedness of the diaphragm cutter, two units were subjected to transportation vibration tests for low-frequency vibration (LFV) and high-frequency vibration for aircraft (HFV-A). In the LFV tests, simple harmonic excitation was applied parallel to each of the three principal axes of the device. The frequency range from 10 Hz to 60 Hz was covered by cycling at a logarithmic rate. The total test duration was 12 hours and the tests were conducted at ambient temperatures. In the HFV-A tests, simple harmonic excitation was applied to each of the three principal axes of the device. The frequency range from 10 Hz to 500 Hz was covered by cycling at a logarithmic rate of one octave per minute. Total test duration for each device was one hour and the tests were conducted at ambient temperature. Radiographs were taken before and after the vibration tests; no damage was observed. Then both units were fired against 100 psig argon pressure with a power source of five volts AC. Venting of gas was normal in both tests indicating that the diaphragm cutter is a rugged and reliable device.

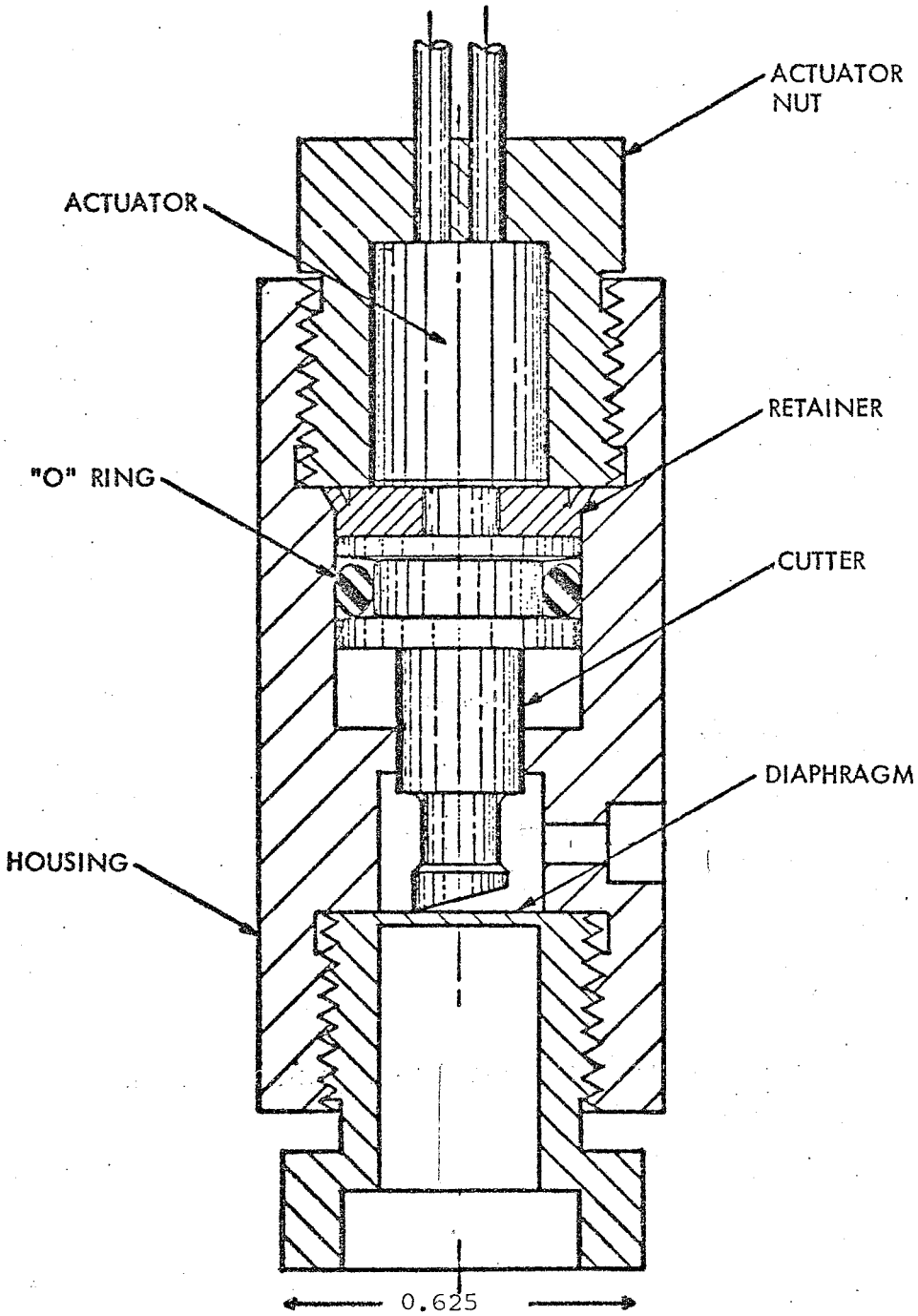

FIGURE P-1. EXPLOSIVE DIAPHRAGM CUTTER ASSEMBLY

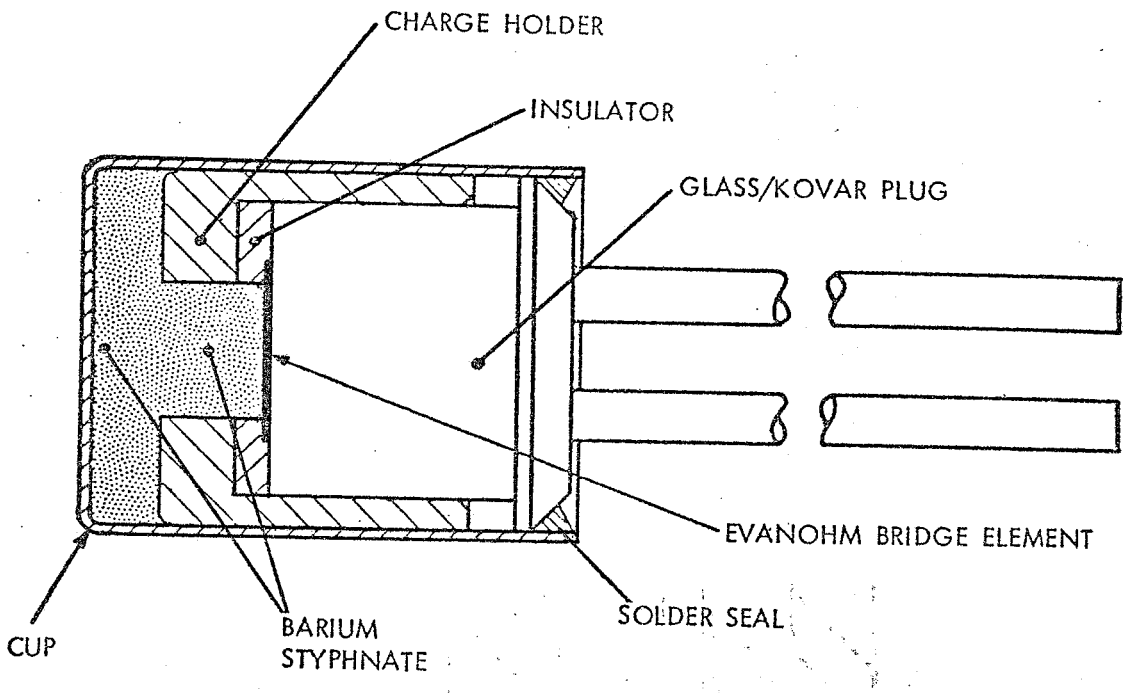

Outside Diameter 0.3 Inch

FIGURE P-2. ACTUATOR FOR EXPLOSIVE DIAPHRAGM CUTTER

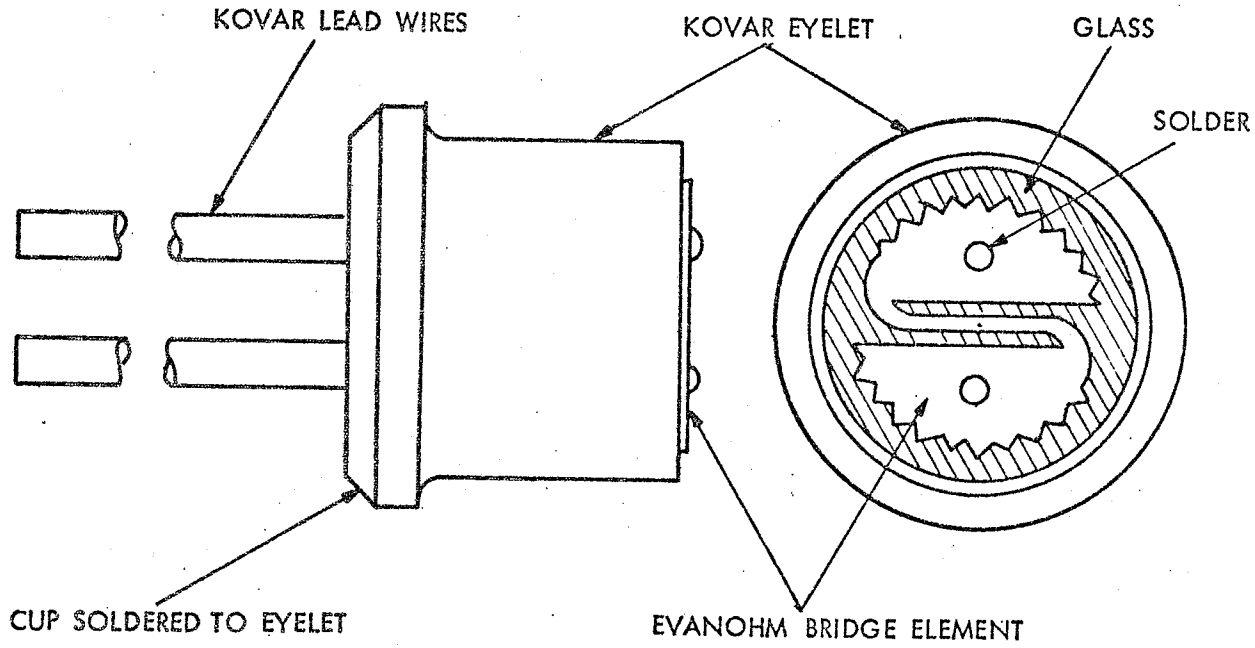

(As Used in Navy Detonator Mk 101)

FIGURE P-3. ONE-AMP/ONE-WATT HERMETICALLY-SEALED ELECTRO-EXPLOSIVE INITIATOR ELEMENT