PB 213 225/8

FRA-OPP-73-1

HUMAN FACTORS SURVEY OF LOCOMOTIVE CABS

30 JUNE 1972

PREPARED FOR

DEPARTMENT OF TRANSPORTATION

DERAL RAILROAD ADMINISTRATION
Washington, D.C.

TECHNICAL REPORT STANDARD TITLE PAGE

1. Report No.
FRA-OPP-73-1

2. Government Accession No.

3. Recipient's Catalog No.

4. Title and Subtitle
Human Factors Survey of Locomotive Cabs

5. Report Date
30 June 1972

6. Performing Organization Code

7. Author(s)
John P. Jankovich, Ph.D., Research Engineer

8. Performing Organization Report No.

9. Performing Organization Name and Address
Naval Ammunition Depot
Crane, Indiana 47522

10. Work Unit No.

11. Contract or Grant No.

13. Type of Report and Period Covered

12. Sponsoring Agency Name and Address
Federal Railroad Administration
400 7th Street SW.
Washington, D. C. 20591

14. Sponsoring Agency Code

15. Supplementary Notes

16. Abstract

Purpose of the investigation was to review design of locomotive cabs from the human factors point of view. The following areas of human factors engineering are discussed: construction of cab interiors; design of controls and displays; atmospheric conditions in the cab; noise and vibration; seat design; physiology and vigilance of train driving.

Discussion of each subject is divided into three sections: (1) survey of relevant literature, (2) conditions on domestic locomotives, and (3) recommendations to improve present models and future design. The recommendations relate only to the designs reviewed under the scope of this study and represent the viewpoint of the author and not necessarily those of the FRA.

17. Key Words
Human Factor Engineering
Locomotive Cab Design
Engine Crew Accidents
Cab Environment
Railroad Safety

18. Distribution Statement
Availability is unlimited. Document may be purchased from the National Technical Information Service, Springfield, Virginia 22151, for $3.00 a copy.

19. Security Classif. (of this report)

20. Security Classif. (of this page)

21. No. of Pages

22. Price
$3.00

Form DOT F 1700.7 (8-69)

NAVAL AMMUNITION DEPOT
CRANE, INDIANA 47522

HUMAN FACTORS SURVEY OF LOCOMOTIVE CABS

30 June 1972

PREPARED BY John P Jankovich
JOHN P. JANKOVICH, Ph.D., Research Engineer

RELEASED BY James M. Peay
JAMES M. PEAY, Manager, Human Factors Division

RESEARCH AND DEVELOPMENT DEPARTMENT

ABSTRACT

Purpose of the investigation was to review design of locomotive cabs from the human factors point of view. The following areas of human factors engineering are discussed: construction of cab interiors; design of controls and displays; atmospheric conditions in the cab; noise and vibration; seat design; physiology and vigilance of train driving.

Discussion of each subject is divided into three sections: (1) survey of relevant literature, (2) conditions on domestic locomotives, and (3) recommendations to improve present models and future design.

SUMMARY OF RECOMMENDATIONS

Dimensions of the workspace in the cab are adequate on domestic locomotives, however, visibility, location of controls, and door arrangements should be further improved. Improvement of the control stand could be pursued by two different approaches: by modification of the present control stand to suit the human operator more adequately or designing a completely new wrap-around control stand through system approach and mock-ups. The survey of the thermal environment in the cab shows that winter heating is sufficient, but problems of fresh air supply without opening the windows have not been investigated either for winter or for summer operation. Noise studies found controversial results, therefore, both noise and the thus far unmeasured vibration conditions must be investigated. Adaptation of one of the better optional seats as standard instead of the present basic chair is recommended until an optimal locomotive seat is developed. The dead-man pedal is not satisfactory as an effective vigilance device. Physiological functions other than muscular work should be utilized in future designs to monitor alertness of the operator. The present practice, where the railroads specify the type and arrangement of equipment to be built in locomotive cabs by the manufacturers, cannot result in good human factors design by its nature. A universal cab with all of its equipment designed according to the principles of human factors engineering must be developed and adopted for the entire railroad industry.

TABLE OF CONTENTS

LIST OF TABLES

LIST OF TABLES

LIST OF ILLUSTRATIONS

INTRODUCTION

The need for a human factors survey of domestic locomotives was pointed out by a previous study prepared by SysteMed, Inc. in A Study of Human Factors Affecting the Safety of Railroad Operations.(135) Objective of this investigation was (1) to survey the human factors conditions in the cabs of domestic locomotives and (2) to review relevant literature on human factors cab design. This report has been compiled as a comparative study of human factors design aspects of intermediate and high horsepower locomotives. It covers the construction of cab interiors, location and operation of controls and air brake equipment; the atmosphere, noise and vibration in locomotive cabs; the design of locomotive seats, physiological and vigilance requirements of train driving. The results of the study show improvements in cab construction and design approaches which could make conditions in locomotive cabs more suitable to the needs and performance capabilities of human operators. Guidelines are also presented to improve future designs and indicate where future research is needed due to unique human factors conditions in locomotive operations.

The following models of locomotives are covered in the report:

EMD (Electro Motive Division of General Motors Corporation) GP30, GP35, GP38, GP39, and GP40; SD35, SD38, SD39, SD40, and SD45.

GE (General Electric Co.) B and C models of the U23, U25, U28, U30, U33, and U36.

ALCO (Alco Products Inc.) C420, C424, C425, C430, C628, C630, and C636.

Additional data are provided on the EMD switchers SW1000, SW1500.

In each area of human factors, the report first discusses findings which are general and applicable to most of the models. Perspective differences are pointed out later according to special designs found on locomotives of various manufacture, and on individual models.

Based on a survey of locomotives manufactured previously and in operation presently, collected from a number of professional sources, (30,39,71,108,130) it is believed that the report covers most of the major types of locomotives in use by the domestic railroads today.

Data were collected for the report by visiting the locomotive manufacturers: Electro Motive Division of General Motors in LaGrange, Illinois and Transportation Systems Business Division of General Electric in Erie, Pennsylvania. Technical data, results of research measurements, drawings of locomotive cabs and controls were obtained from the manufacturers. In order to review and photograph older locomotives still in operation and to reveal respective differences between models of previous and recent manufacture, three yards of the Louisville and Nashville Railroad were visited. In compilation of the data, the assistance given by personnel of the Human Factors Branch, Transportation Systems Center, DOT, Cambridge, Massachusetts, during mutual visits to both Cambridge and NAD Crane, Indiana is appreciated.

Presently, the domestic railroad companies purchase in effect "custom built" locomotives because the railroads specify, by vendor, many of the items on the locomotive such as the cab seats; engineer's control panel layout; speedometer and speed recorder; deadman pedal - size and location; radio, including location; type and model of seat and seat arrangement; water cooler/refrigerator; fire extinguisher, including location; horn, 3 or 5 chime and location; and etc. Title 49 Chapter 11 Paragraph 230.200a of the FRA Rules states that "the Railroad Company is responsible for the general design construction, inspection and repair of all locomotives used or permitted to be used on its line." Additionally, some design details have been controlled by agreements between individual railroads and their employees' union. The relationship of the operator to the front window and control console, including cab location, is one example.

These procedures, however, cannot assure a good human factors design of locomotive cabs. Ideally, a standard locomotive cab should be designed according to accepted human engineering principles, including consideration to such environmental factors as noise, ventilation, heating, vibration and seating, besides arrangement of controls and displays; and such a standard cab should be built on all future locomotives with a minimum of modification among the various models.

1. HUMAN FACTORS DESIGN OF LOCOMOTIVE CAB INTERIORS

1.1 Literature Survey of Locomotive Cab Design

Driving position in the cab of a railroad locomotive has been severely limited until late by the steam locomotive boiler or motive power unit. Thus the engineer's visual field and comfort have been restricted considerably. The introduction of front-end cabs and short-hood construction changed the conditions and significant advantages can be achieved by designing the cab according to the principles of human factors engineering to suit the human capabilities and comfort requirements of the operator.

The design and layout of the driving cab on diesel locomotives has been traditionally the responsibility of the manufacturer and the buyer. In 1958, however, the International Union of Railways (U.I.C.) issued its first recommendations under Code 625 and required these and subsequent specifications to become obligatory for incorporation into international European stock built after the dates of issue.(36)

The first of these regulations concerned fire precautions and fire fighting matters relating to the safety of driving personnel. It drew attention to the importance of using non-flammable material in the proximity to the engine and regulated the external temperature of lagged pipes. The next issue under Code 625 UIC specified requirements for glazing the driving compartment. It differentiates between windows which have to be fitted with unbreakable glass and remain intact and transparent after damage and those which may be broken to permit exit in case of emergency. One front window or a side window on each side of the driving compartment is required to be large enough to allow a man to pass through the frame after the glass has been broken.

The seated position of the crew is embraced by Series 3 of Code 625, issued in 1959, which recommends it to be as high above rail level as possible. The importance of providing protection to the man by high strength cab construction is also emphasized in this series. In order to protect the crew in accidents, all heavy equipment is required to resist at least 3g deceleration. Sharp edges, corners, and loose fittings are to be avoided in cab design. In 1960, Series 4 of Code 625 was issued to cover the engineer's seating position more adequately. It requires the cab to be built for one-man operation and arranged so that it can be driven by the driver standing as well as sitting. The space to be provided at seated eye level has to be at least 72 1/2" high, 47" long, and 78 1/2" wide. A distance of 19 1/2 to 47" from the engineer's eye to the front window is stipulated and the use of mirrors for backward vision is not permitted. The driving position has to be such that backward observation is possible without having to hang out of the window. Adjustable foot rests and seats are recommended which must be comfortable and permit the driver to operate standing. All control handles and gauges in frequent use are to be conveniently grouped and easily seen from the driving position. The height of the top of the window is required to be at least 67" from the cab floor and defogging system, antiglare screens and windshield wipers must be provided.

To avoid confusion of controls, the fifth of the series under Code 625 specifies that all controls must be separate in function, e.g., a combined power control and brake lever would not be acceptable. Wheel or handle type control is acceptable for power control. The wheel should rotate vertically or nearly so and in each case the degree it is advanced from the zero position must be readily discernable.(36) The above recommendations of UIC constitute the first systematic application of human factors engineering in the design of locomotive cabs.

Much European work has concentrated on physical and environmental aspects of cab design. Sanitary and hygenic problems of railroad engineering have a long history in Germany and the human factors aspects of cab design are of special concern to the physicians of the German Railways.(55) German work recommends 350-530 ft^3 space to be optimum in the locomotive cab.(49) For European conditions, 280 ft^3 space could be considered as a good compromise according to the report. The height and width of the cab are suggested to be 79". The surface finish of the cab interior must be of low spectral reflectance, light color, and easy to clean. The colors of signal lights and their complementary colors should not be used. Additional data concerning the recommended dimensions for designing locomotive cabs were received from Dr. Wittgens, President of Human Factors Group, International Union of Railway Physicians.(155) These recommendations, prepared for the International Union of Railways (UIC),suggest that the cab dimensions are to be 79" high, 73" wide, and 70" deep at the eye height of the seated engineer, i.e., between the windshield and the first object behind it (such as cab wall, control panel, door, etc.). The distance between the engineer's head and the windshield should be 20" to 47". The doors should provide protection against noise and outside air pollutants. Both the outside doors and the cab service doors must be 23 1/2" wide and 73" high. The ratio of window area to floor area should be a minimum of 0.4 which corresponds to the Soviet standard.(97) The lower edge of the front window should be 37 1/4" high, and the upper edge 73" above the cab floor. The floor must be easily cleanable, not slippery, and should provide insulation against cold and noise. A 14 x 12 x 59" closet or cabinet is recommended for storing cloths within reach of the seated engineer. Two additional cloth hooks should be located in reach of the seated engineer. The stairs leading into the cab must be an equal distance from each other -- a maximum of 13 3/4" is recommended, with the lowest stair about 13 3/4" above the rail surface. Stair width should be 12 to 16", stair depth 2". Handrails must be placed on both sides of the doors and stairs. The rails should start at 35" above the rail and the upper end should not be less than 47" above floor level of the cab. The door handles must be 3" from the door edge, 2" above the door surface with a 4 1/2" minimum length.

The fundamental problems of cab structure and equipment were analyzed on three electric and two diesel locomotives of the Polish Railways.(79) By means of a questionnaire and a human factors checklist, significant differences were found among the various models in the engineer's workspace, desk arrangement, and instrument design, seat construction and location, and sanitary and hygenic installations. Size of the cab floor area varied between 23.2 to 31.0 ft^2; the cab space was found to be 229 ft^3 to 337 ft^3. The ratio of the area of windows to the area of cab floor is recommended to be at least 0.40. This value was exceeded on all locomotives examined. The investigation of the locomotives and sanitary equipment found that most of the models had a cloth closet, food warmer, and wash basin; however, only a few had food storage box, first aid kit, and toilet.

Cabs in city transit cars are of entirely different construction; frequently half of the total width is used to house the driver and the operator's space and ventilation requirements are often unsatisfied. A means of emergency exit is required and the cab should be designed to protect the driver in a collision, aspects often not found in present units.(122) Another paper also emphasizes that safety should be of primary concern in the design of locomotive cabs.(74) Protection of the individual must be designed both into the operational aspects of controls and signaling and in the constructional aspects of locomotive cabs. Collision protection is also an important feature of cab design. The locomotive body should protect the engineer against collision forces as much as possible and the cab interior should be free of sharp edges and corners which could induce injuries.(49)

Series 3 of Code 625 issued by the International Union of Railways (U.I.C.) recommends that all cab doors be arranged to open inwards. Many railroads do not agree with this latter provision and prefer the opposite for the exit to the catwalks of the locomotive.(36) With this arrangement the driver can escape quickly if a collision is imminent and no further action can be taken by him. This is quite in keeping with past experience where men jumped from locomotives immediately prior to collision, and in some cases avoided serious injury. Furthermore, the switching locomotive with only rear access to the cab can present a special problem under derailment conditions. If railway cars pile up on the back-end and no other access is provided, the crew can have difficulty in getting out. A door fore-and-aft is more satisfactory but, here again, if the machine settles on its side the front door can be on the under side and rear door obstructed. Side doors are thus really to be preferred to meet such eventualities.

Optimal size of the window area is also subject to controversy. The German, Polish, and Russian literature stipulates that the ratio of the total window area to the area of cab floor must be at least 0.40. (154,79,97) A German report recommends that the visual field must be as big as possible, and in a switching engine the bumpers must be visible from the normal operating posture.(49) However, perhaps one of the most unexpected reactions observed has been the discomfort which too good a visibility has brought about. Too large a view of the track beneath the driver's direct vision is unnecessary, and very large low windows have been a source of some annoyance. Backward glare from marker lights in fog have caused these to be considerably toned down and side glare from low sunlight has been a further problem with very large front windows. The U.I.C. requirement that windows shall be as small as possible to provide greater strength to the cab is thus of interest. It conforms to general operating requirements as well.(36) The cabs are fully glazed above waist height and are fitted with v-shaped sloping driving windshields on the French Railways Type 68,000 diesel-electric locomotive designed for mixed traffic duties on non-electrified main line routes.(90) The locomotive has two identical full-width driving cabs at each end.

Windshield material must be carefully chosen. Several requirements must be satisfied: strength, transmissibility, freedom of color distortion, scratch resistance, and scattering of light. Distinct differences have been observed in the light scattering ratio of various windshield types.(107) The structural nature of the surface can adversely affect visibility and perceptibility of objects. There is a threshold for light scattering and beyond that limit even small increases are strongly noticeable, thus reducing perceptibility of objects through the windshield.

Since December 1970, Penn Central uses Lexan to replace broken side windows in locomotives, passenger cars, and cabooses.(103) Lexan is a high strength, impact resistant polycarbonate, developed by General Electric. Its thermal conductivity is one-third that of glass, thus it decreases conventional heat loss through the cab windows. Most recently an improved form called Lexan MR-4000 has been marketed, which has clearer seeing qualities and higher resistance to scarring from abrasions or chemicals. Penn Central already started using the improved version for replacement windows.

In development of future transportation systems, consideration has to be given to the statistically average operator (Ref. 132, p.68). Most previous studies have been directed toward reactions of highly skilled and trained personnel such as military or airline pilots. Many studies in the past consider only causal relationships which are value judgments by an individual investigator concerning failures leading to breakdowns or accidents. As a first step in development of future hardware, laboratory simulation of the man-machine interaction is recommended.(133) Simulation techniques have been successfully applied to optimal development of aircraft, military tanks, and submarines. Less complex simulations could advantageously be applied for the design of transportation equipment.

In the study of the locomotive engineer's work, the relationship between man, machine, and working environment must be combined.(139,140) This work study, whose primary aim is to establish rational use of resources in labor and management, contains analytical techniques for assessment of jobs, particularly of locomotive engineers in the working environment.

A French report discusses the design aspects of cab construction and control systems in electric locomotives.(96) The report emphasizes that in construction of a locomotive serviceability and ease of maintenance must also be given consideration. Designers of the EMD 6600 Centennial locomotive paid particular attention to maintainability.(2) This model is equipped with a modular excitation system, with several inherent advantages. The most important is that the component in trouble can be unplugged and replaced in a matter of minutes. All major electronics, excitation, wheel slip, and other controls are mounted on modules that do not require removal or replacement of terminal connections. The modules are housed in the control cabinet of the cab.(2) The modular plug-in components concept was introduced to the railroads in 1960 by General Electric and has been continued in all locomotive models. GE has made continual improvements in the "blue cards" - the name used for the modular plug-in components - from hand wired to machine dip-soldered printed circuit cards of the XR series locomotive style.

1.2 Design of Domestic Locomotive Cabs

There are three major classes of basic cab arrangement on domestic locomotives. The cab arrangement used depends on the function of the locomotives:

1. Road locomotives (with a forward looking cab) used mainly for locomotion in one direction only, for example: SD40, SD45, FP45, U30CG, U50C.

2. Switchers which can be operated in both directions with equal ease, for example: SW1500.

3. General purpose locomotives which could be used in both types of operation, for example: GP40, U30, ALCO C628, SD40, SD45, FP45.

Most of the domestic locomotives in use today belong to the third category. The manufacturers, EMD of GM and GE, equip their locomotives with a similar cab in the general arrangement of cab equipment, but the human factors aspects of the two designs are less compatible with each other.

The basic cab on EMD locomotives is 115" wide, 74 1/2" long, 80" high (Fig. 1.1) providing 59.5 ft^2 floor area and 376 ft^3 space. Figure 1.1 shows the general floor plan of the cab. The engineer's side of the cab is also shown in the figure, illustrating the position of the control console, the engineer's chair, and the side windows. The third view in Figure 1 shows the front side with the controls, seats, front windows, and front door. Figures 1.2, 1.3, and 1.4 present outside views of the cab illustrating interior arrangement of the major cab equipment pictorially.

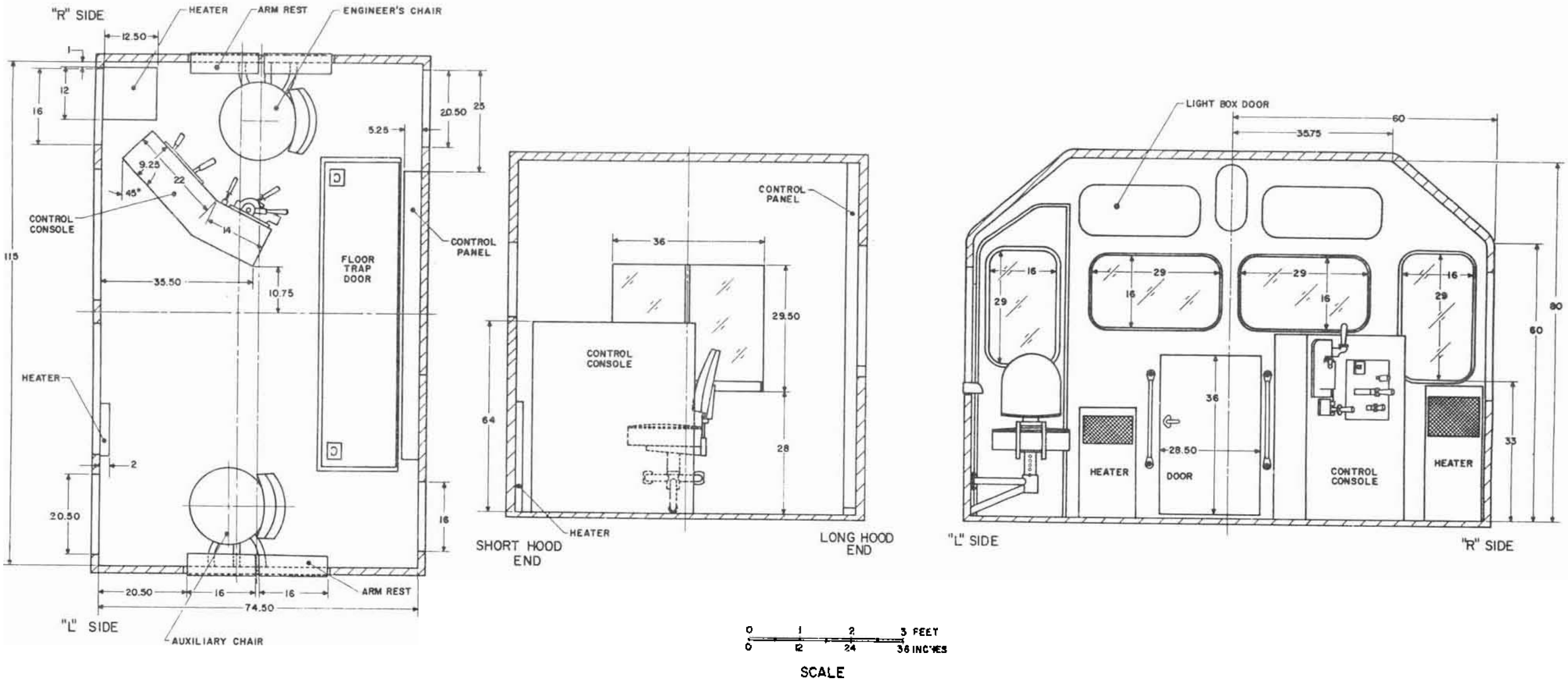

Figure 1.1 - Interior of Basic EMD Cab

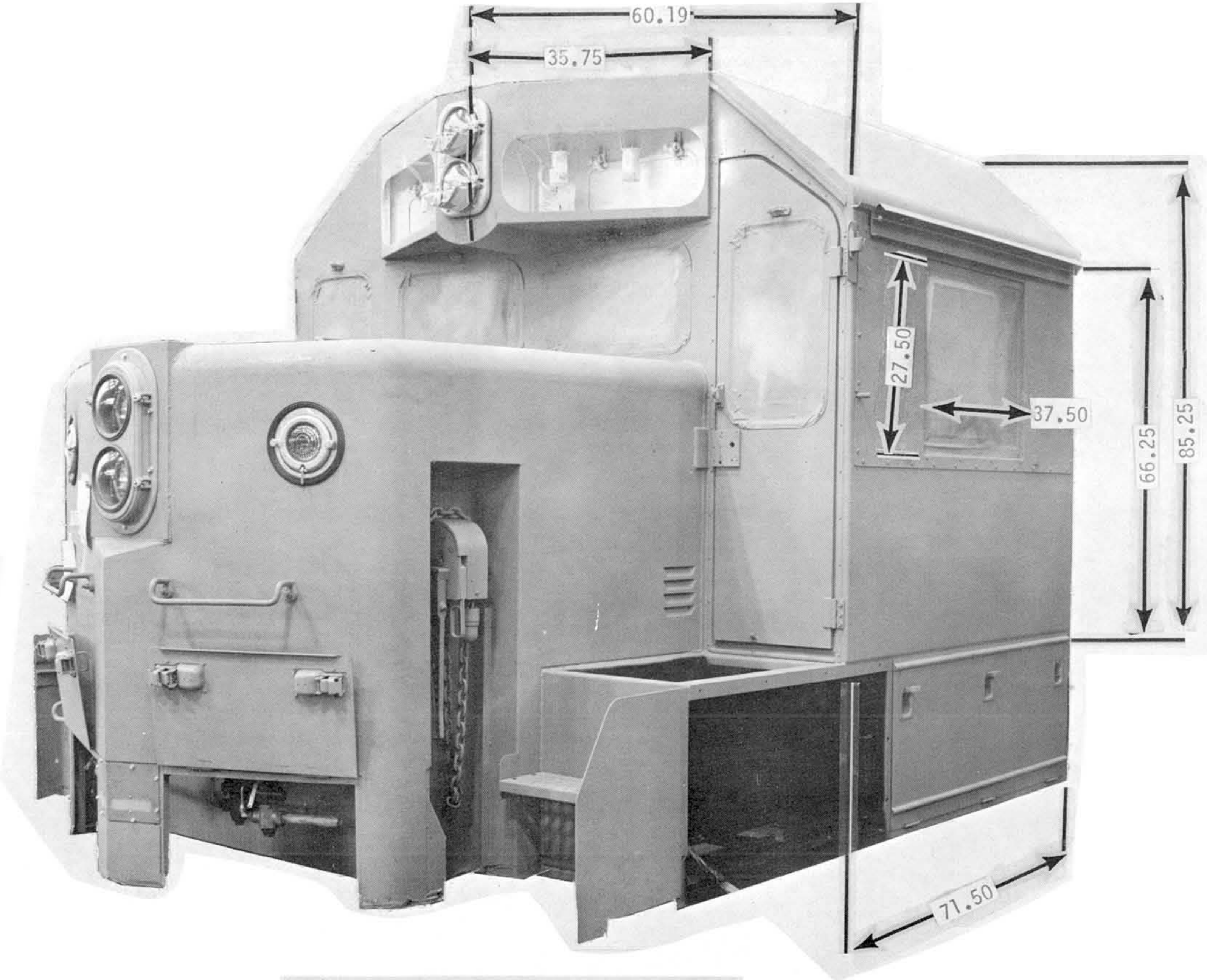

Fig. 1.2 Outside view of basic EMD cab
(partially assembled)

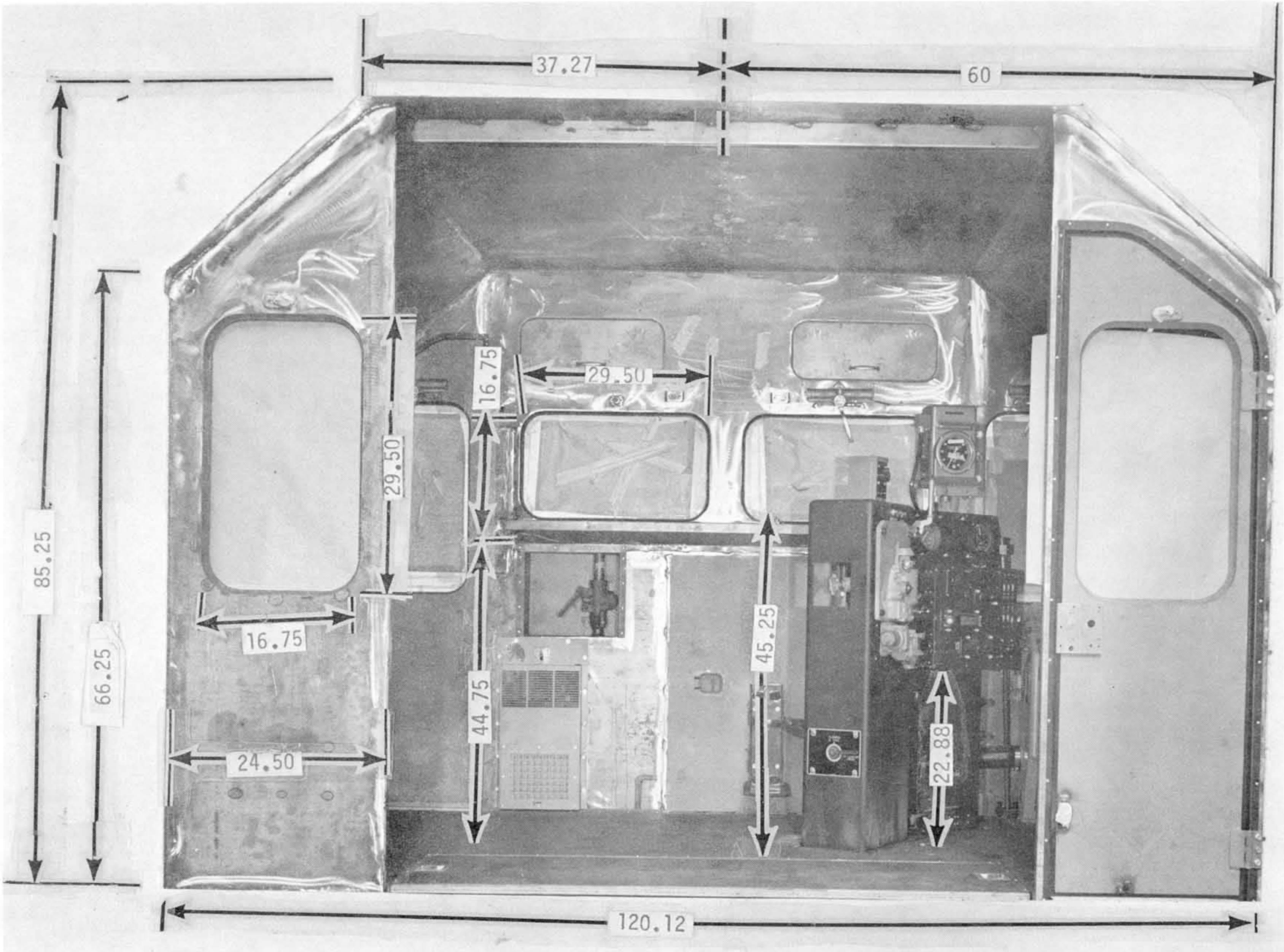

Fig. 1.3 Outside view of basic EMD cab
(partially assembled)

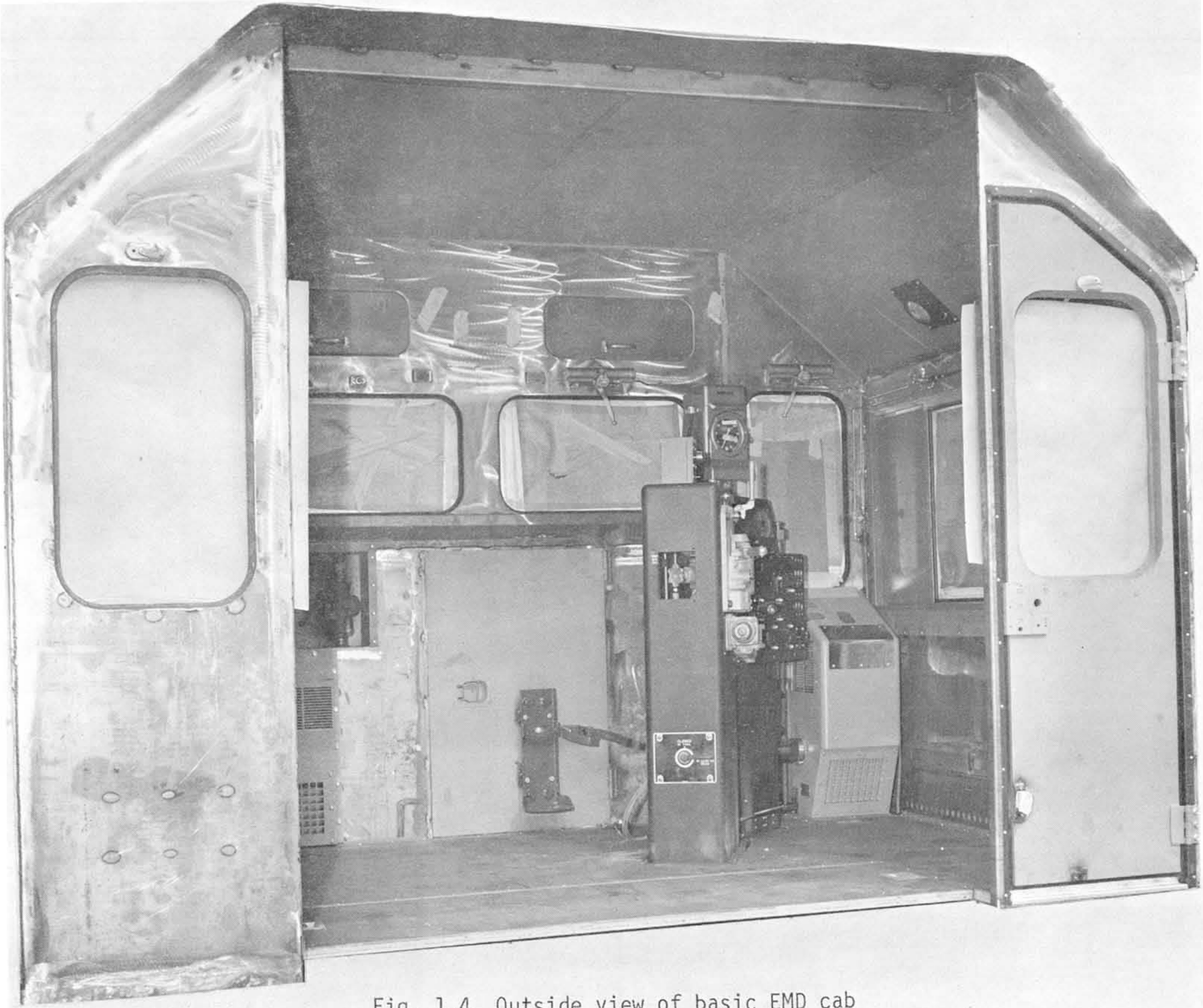

Fig. 1.4 Outside view of basic EMD cab
(partially assembled)

The engineer's control console is located in the right front corner at a 45° angle to the longitudinal axis. The driver's seat is behind the console. The chair is mounted on the cab wall; its position is adjustable 44" horizontally, 4" vertically. For the fireman an auxiliary chair is mounted similarly on the left side wall. The door is 20 1/2" wide, and about 68" high; these dimensions seem to be adequate from the human factors point of view as recommended for catwalks and passageways used by military personnel wearing bulky suits and other gear.(156) There is another door of the same size which leads to the catwalk along the long hood of the locomotive. Both doors open outside.

EMD locomotives have one large 36 x 29 1/2" side window which opens by sliding horizontally. Padded arm rests are mounted on the window sill which fold up and provide support to the engineer when the windows are open. Four 16" x 29" windows are on the front wall, two mounted horizontally, two vertically. Two windows of the same size are on the back wall of the cab to provide views along the sides of the long hood.

Window sizes have not changed in the last 20 years according to EMD designers. The railroad companies prefer standard sizes because of convenience, however, variations in window arrangement among the various railroad companies exist. For example, Southern Railway and Norfolk and Western order their locomotives with a high short hood, thus the two horizontally mounted front windows are eliminated. Southern Pacific prefers to have one large L-shaped window in front of the engineer instead of the basic two standard windows. Penn Central orders locomotives from EMD with three seats installed on the floor, as shown in Fig. 1.5. On road locomotives, 9/16" thick rubber mounted safety glass is used in the front and back windows. In the side windows, the thickness of the glass is 1/4". On switcher locomotives 9/16" glass is used on the sides, 1/4" on the front and back.

There are two heaters in the cab. One of the heaters is located in front of the engineer's chair. This heater is designed to blow out warm air at the bottom in order to keep the driver's feet warm in cold weather. Since there is no foot rest provided for the engineer, it is common that he places his feet on the heater during operation. The other heater is mounted on the fireman's side between the control console and the front door.

The basic cab on General Electric universal locomotives is somewhat similar to EMD cabs. Fig. 1.6 shows the equipment arrangement in the cab. The GE basic cab is 115" wide, 80" high corresponding to the EMD design, but it is 5" longer (length: 79 1/2") providing 64.5 ft^2 floor area and 409 ft^3 space. Figs. 1.7 and 1.8 show the outside view of the basic GE cab with its most important dimensions. The engineer's chair, mounted on the side wall, is adjustable about 52" horizontally, 4" vertically. The engineer has a foot rest, constructed of 1 3/4" diameter pipe, mounted 8" above floor level, which is adjustable about 13 3/4" horizontally. Door locations correspond to EMD design, but the door is 18" wide only, which is somewhat narrower than the recommended value.(156) Door height is an adequate 68". The GE

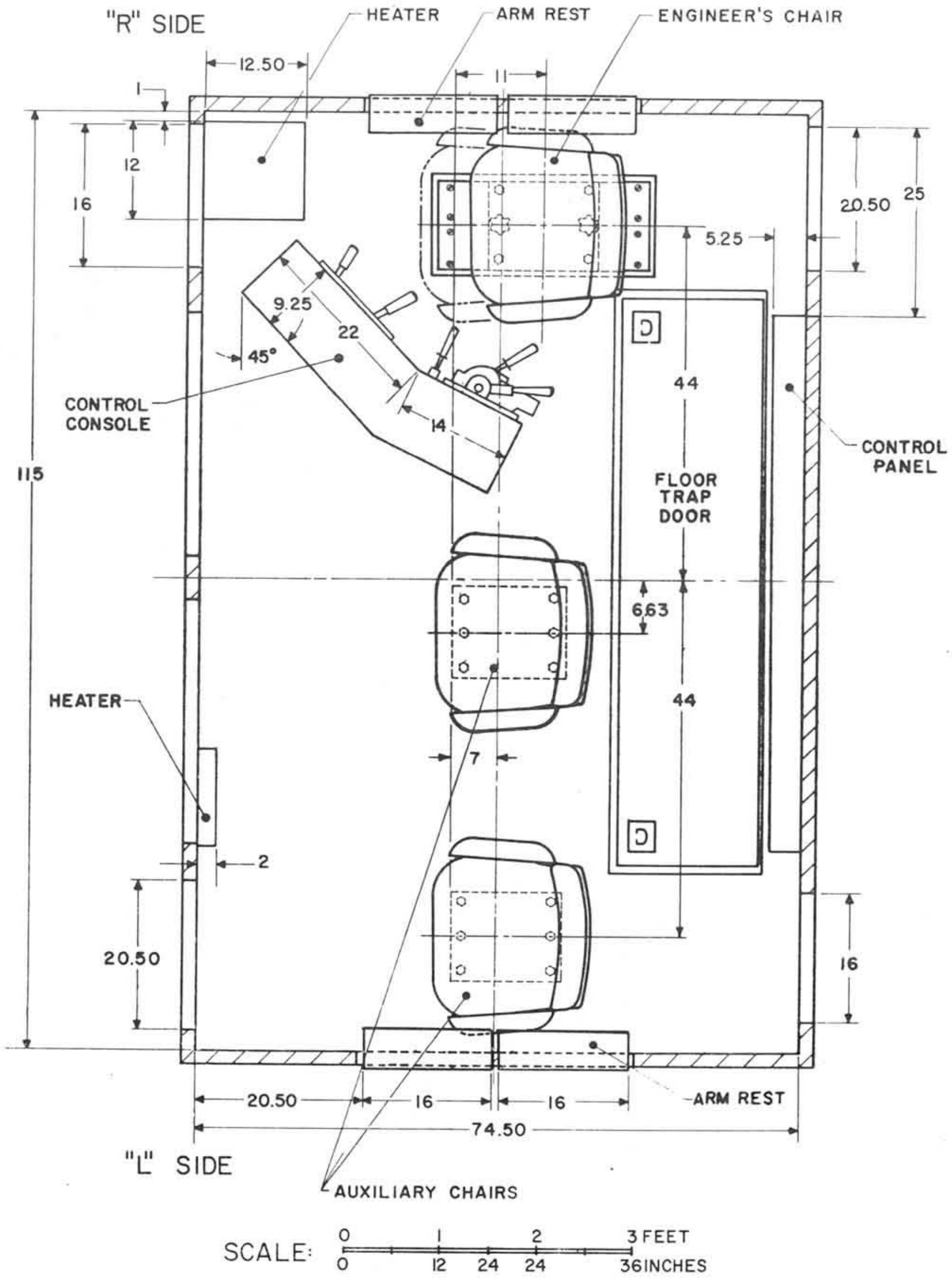

Figure 1.5 - Three-Seat Version of the Basic EMD Cab

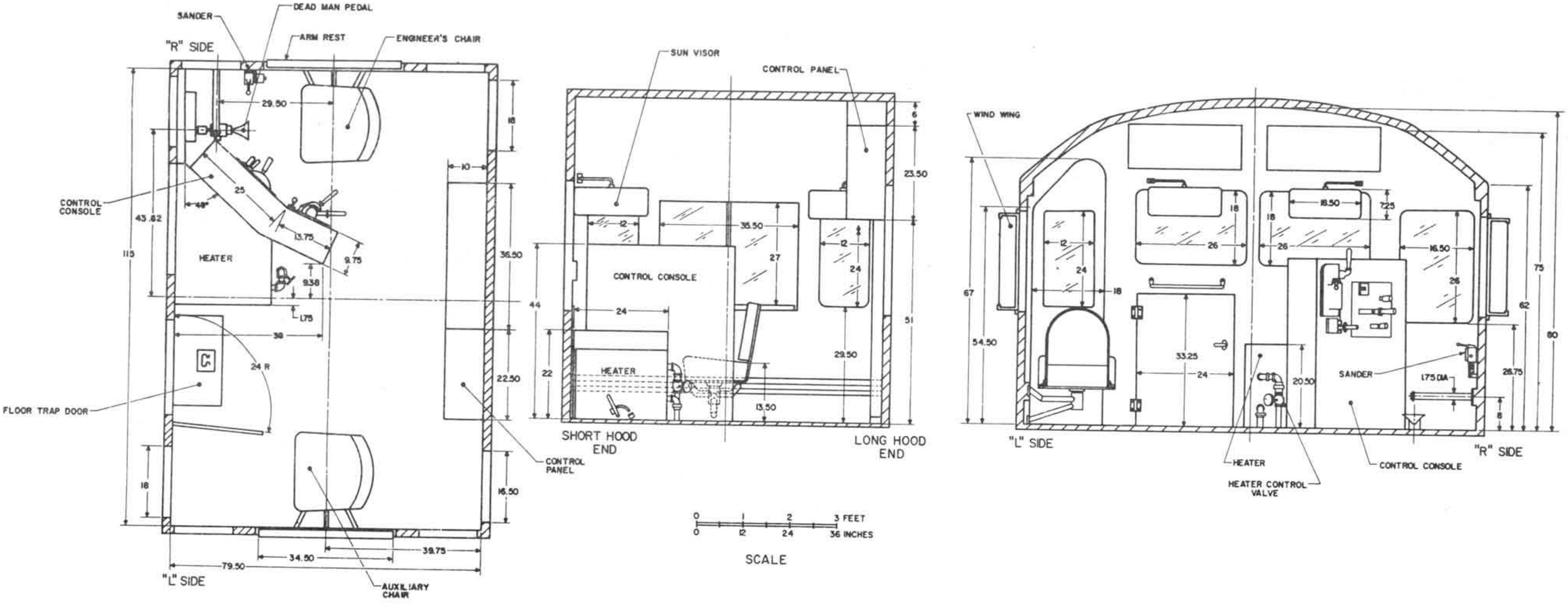

Figure 1.6 - Interior of Basic GE Cab

Fig. 1.7 **Outside Of Basic GE Cab (partially assembled)**

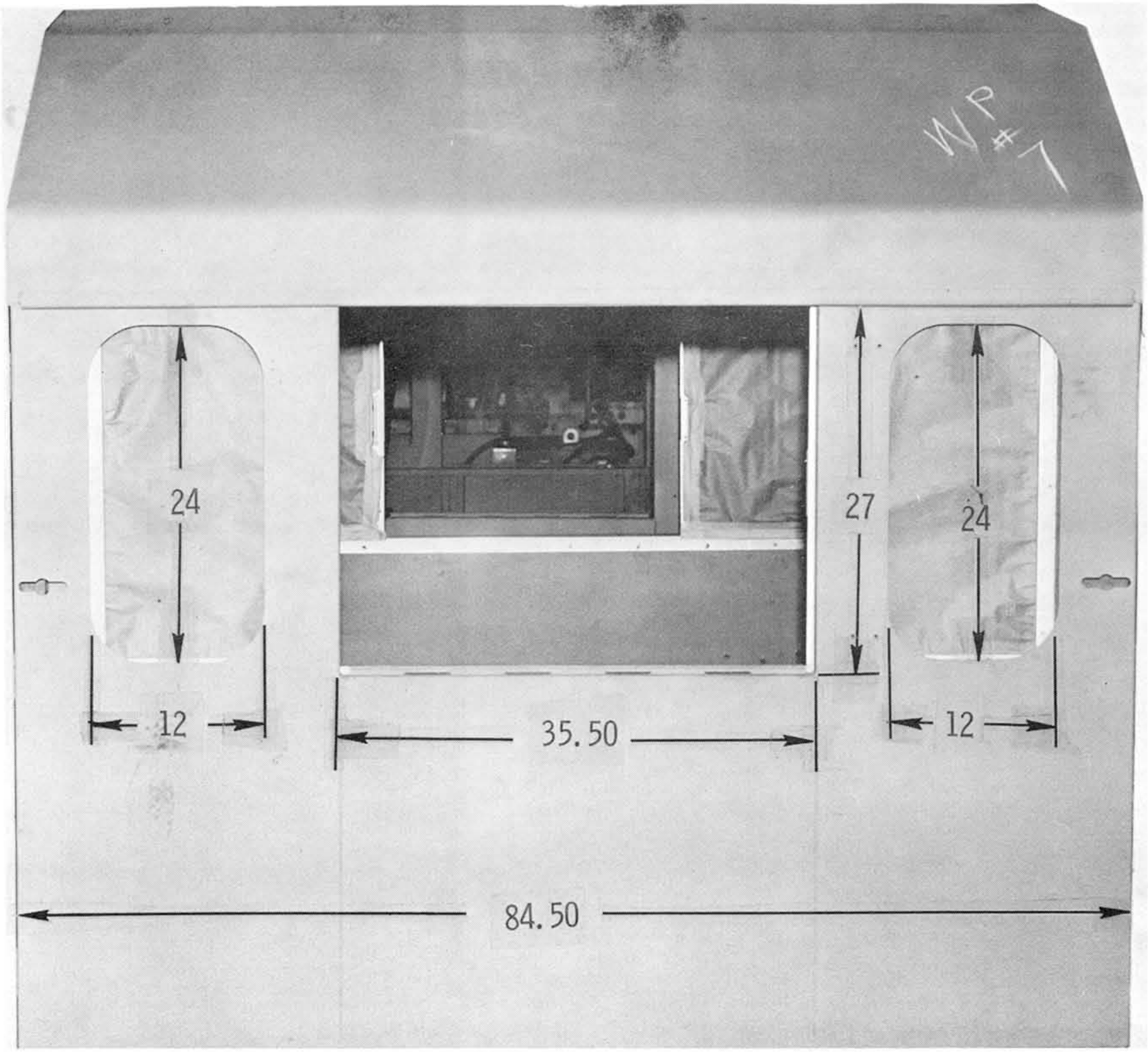

Fig. 1.8 Outside View Of Basic GE Cab (partially assembled)

cab has two additional windows with respect to EMD, 12" X 24" on each side wall. The size of the door windows on the front and back side of the cab is also 12" x 24". The other windows in the front and in the back wall are 16.5" x 26" and 18" X 26" respectively. Thus the total window area in the GE cab is considerably larger than in an EMD (about 40 ft^2 vs. 28 ft^2). Burlington Northern Railroad orders special sunshade-rainshade above the sliding side windows.

A common variation, found on GE locomotives, is the installation of a third seat. It is usually mounted on the wall as Figs. 1.10 and 1.13 show. The basic GE seats are used on these models. Figs. 1.11 and 1.12 show installation of special order seats in GE locomotives. (Details of construction of the various seat types are discussed in a separate chapter).

Position of the control console is frequently changed according to the special requirements of the different railroad companies. For example, on locomotives, driven extensively in both directions, two control consoles are installed,as shown in Fig. 1.13, for Norfolk and Western Railroad. The basic dimensions, window, and door construction are left unchanged; the only difference is that two basic control consoles are built into each end of the cab. This type of two-station operation used to be standard on the Erie-Lackawanna Railway until 1967. The Southern Railway System routinely operates with the long hood in the forward direction and therefore GE installs the engineer's control console and seat on the left side, looking along the long hood, Fig. 1.14. As a further variation, Fig. 1.15 shows the cab layout in a U30 locomotive used in two- directional operation by the Reading Company: this locomotive

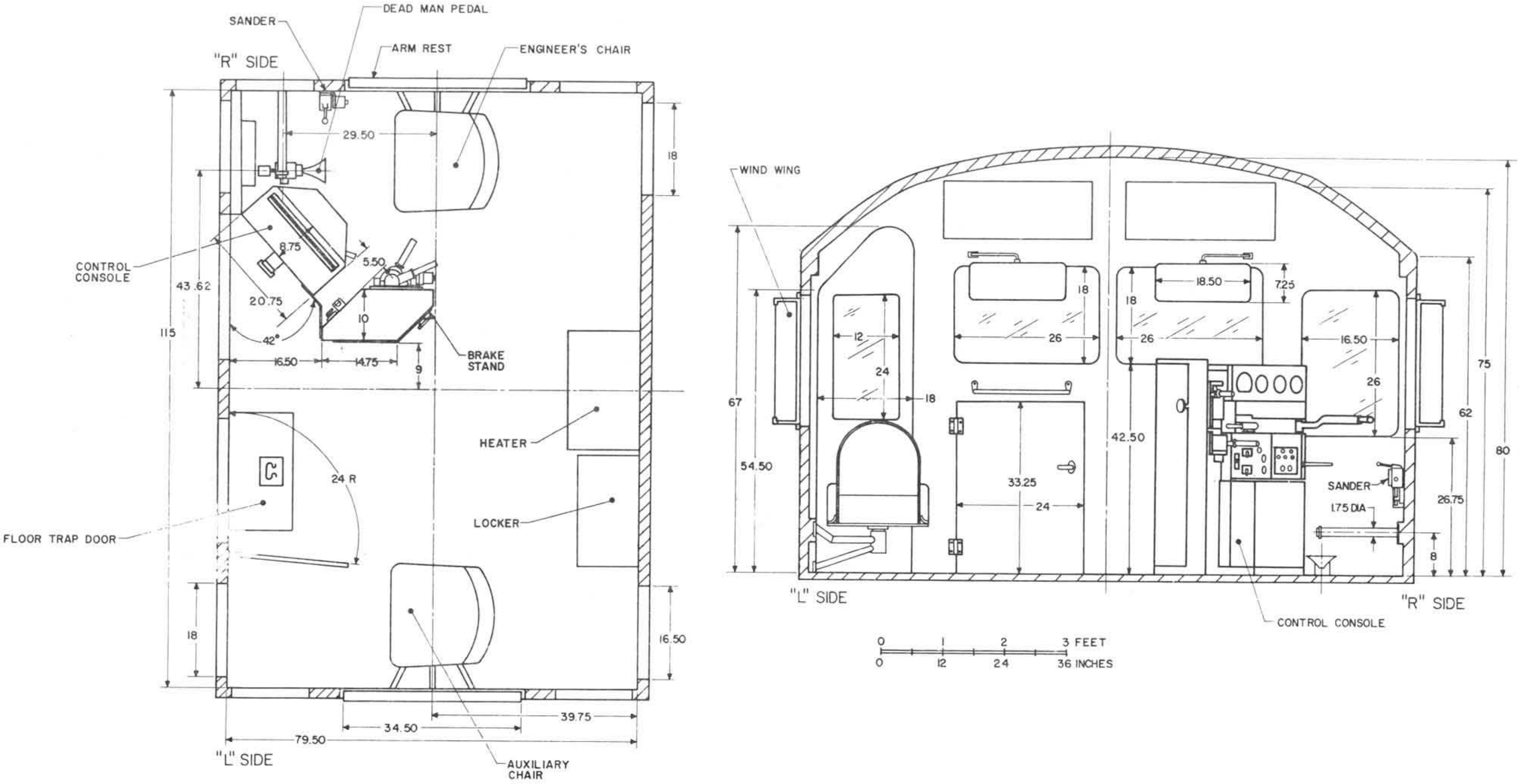

Figure 1.9 - Basic GE Cab with Earlier Control Stand

Fig. 1.10 Two auxiliary basic seats on GE locomotive

Fig. 1.11 Two auxiliary special seats on a GE U30 locomotive of Louisville and Nashville Railroad

Fig. 1.12 Two auxiliary floor-mounted arm chairs on a U28B GE Locomotive of New York Central Railroad

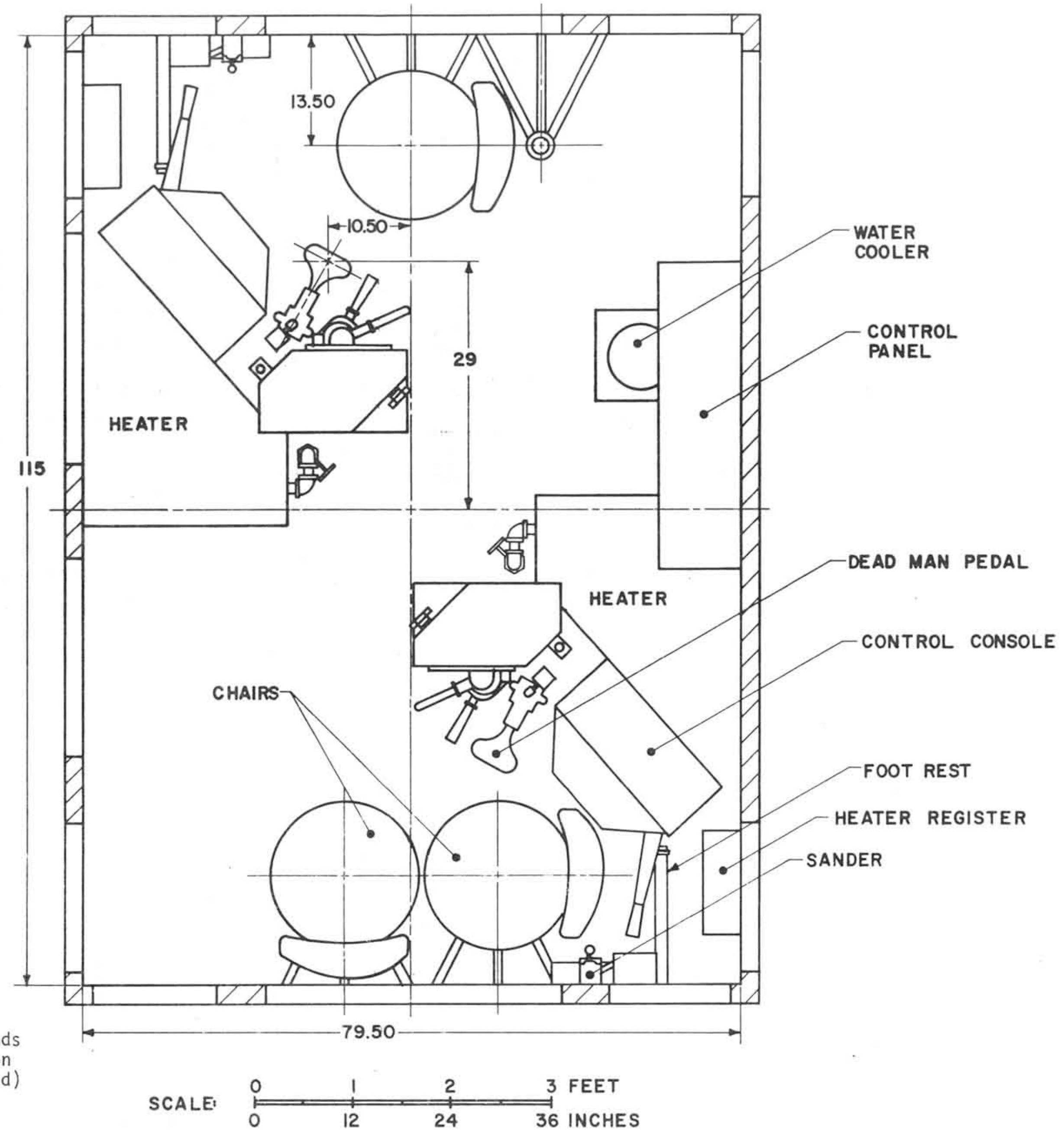

Figure 1.13 - GE Cab with Two Control Stands for Two Directional Operation (Norfolk and Western Railroad)

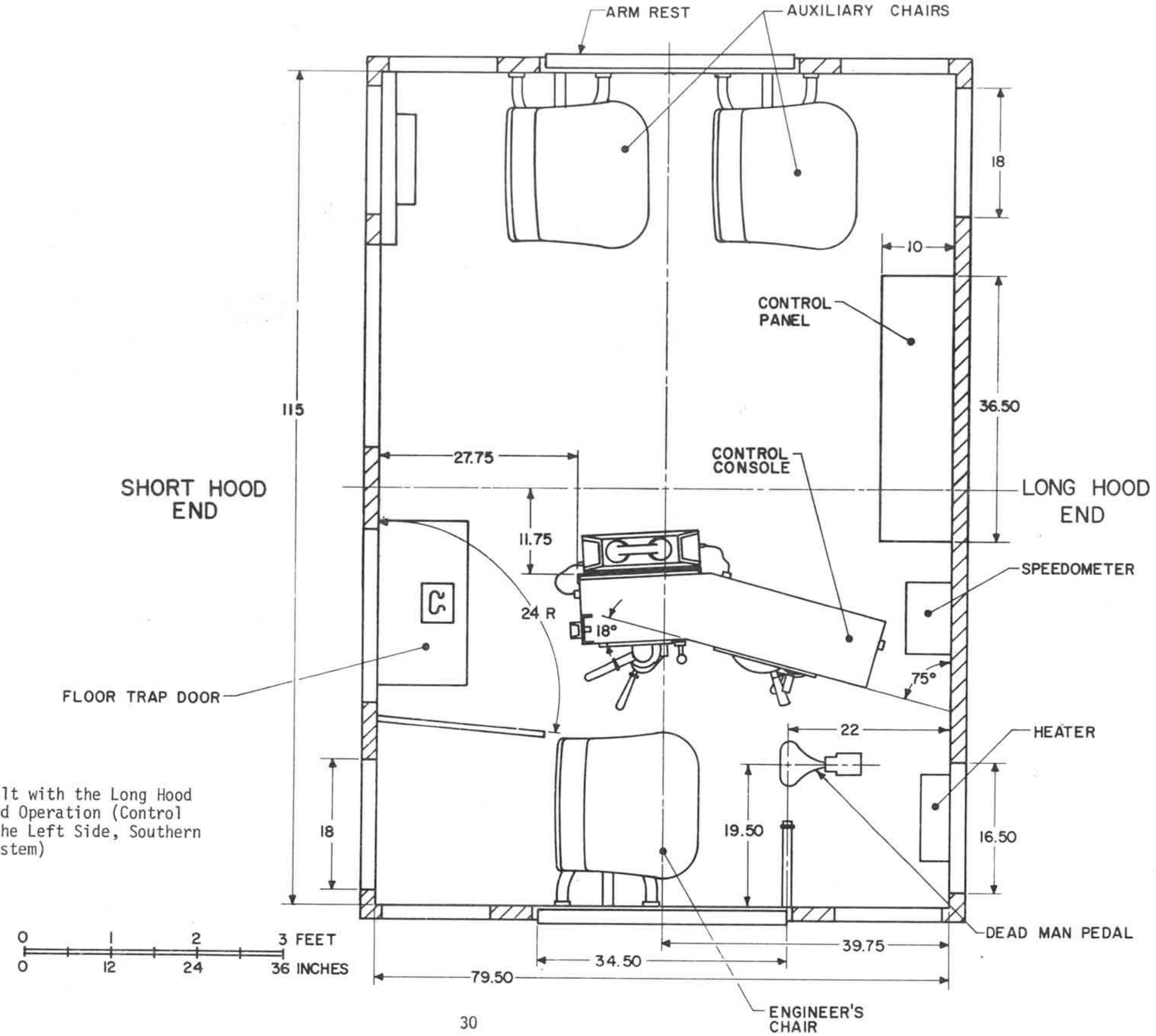

Figure 1.14 - GE Cab Built with the Long Hood for Forward Operation (Control Stand on the Left Side, Southern Railway System)

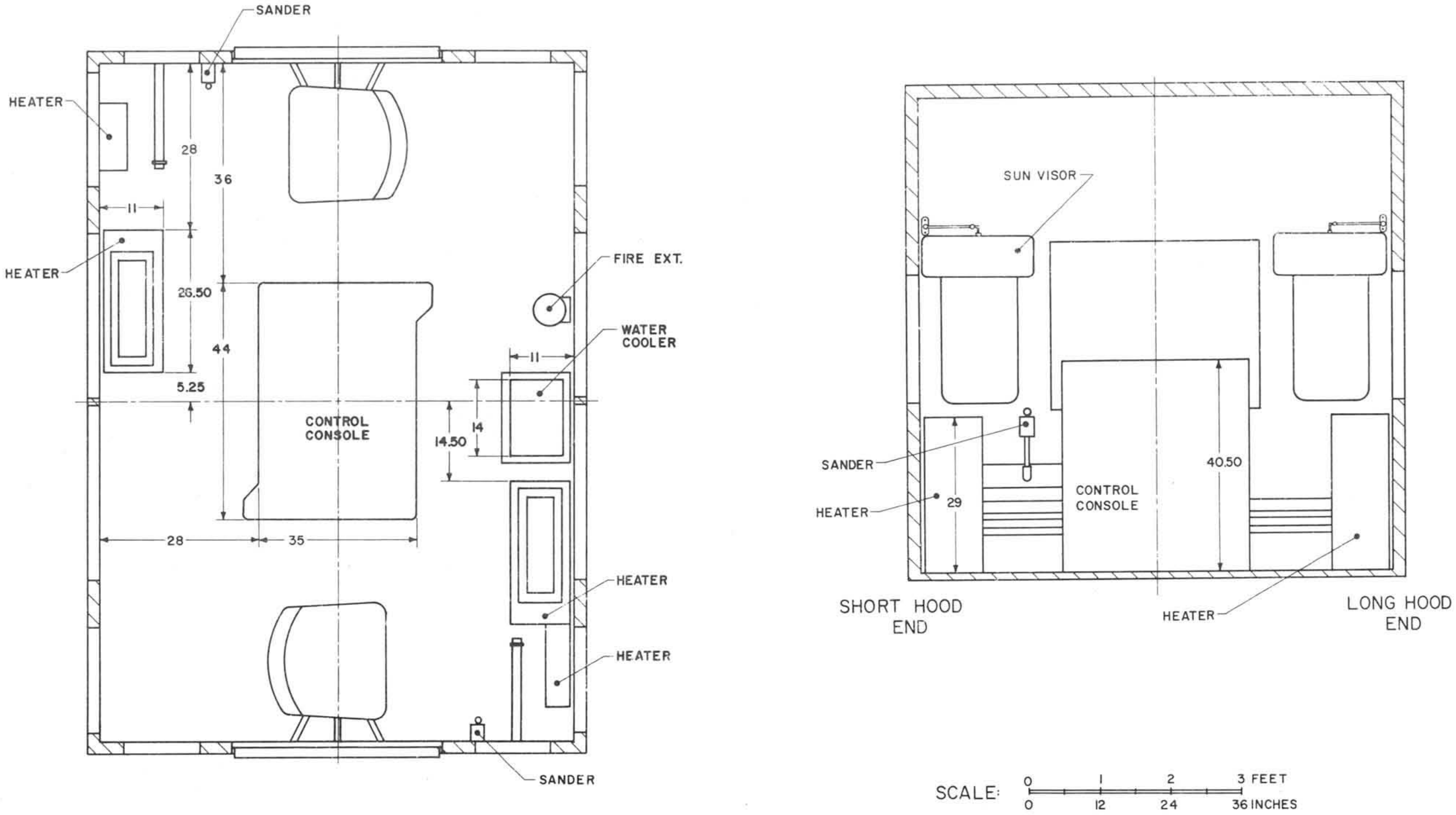

Figure 1.15 - Control Stand Located in the Middle of the Cab for Two-Way Operation (GE U30, Reading Co.)

is equipped with one control console located in the middle of the cab with a brake stand and control display unit on both the left and the right side.

It should be noted that the basic control console on GE locomotives built before December 1966 was substantially different from that shown in the previous figures (e.g., Fig. 1.6). That earlier control console consisted of two separate cabinets, one being the brake stand and the other was the control unit. (Details of the different control models are discussed in Chapter 2 of this report).

Visual field of the engineer in a U30C model is shown in Figs. 1.16-1.20. The photographs were taken from the eye position of a seated engineer of average height. Fig. 1.16 shows the forward view from the engineer's seat along and above the short hood. The speedometer obstructs part of the view in the upper left corner. Fig. 1.17 shows the field that the engineer can see when he turns backwards and looks through the back door window along the long hood. Figure 1.18 presents the visual field through the two front wall windows, looking slightly left from the engineer's seat above the control console and over the top of the short hood. It must be noted that this picture was taken in a new locomotive, and nothing had been mounted on the top of the control console. In railroading practice, usually the remote control unit is mounted on this location obstructing the view considerably through the lower part of both windows. When the engineer looks further left, toward the left side of the cab above the top of the control console, the radio unit obstructs his view to a considerable extent (Fig. 1.18).

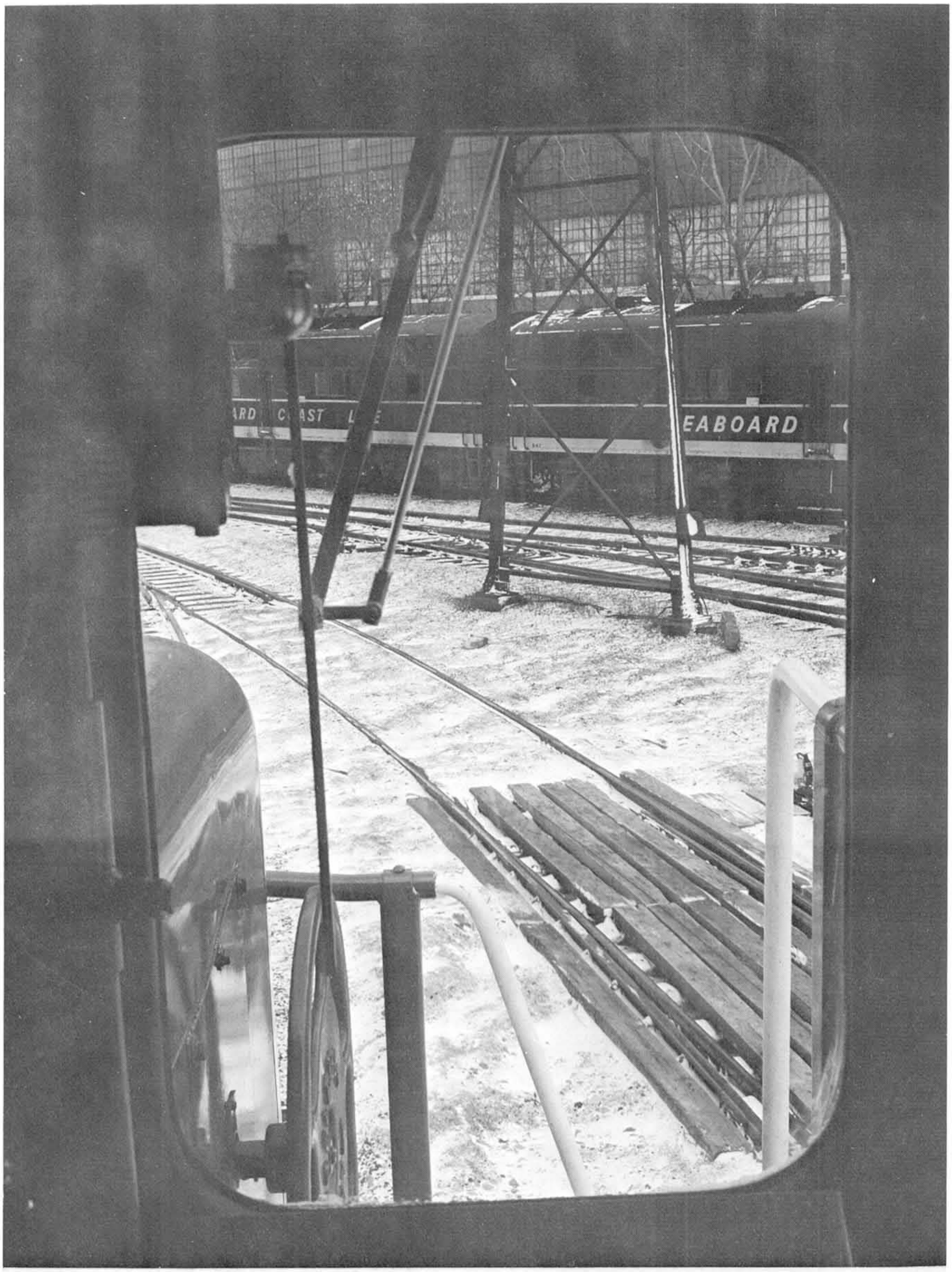

Fig. 1.16 Forward view from the engineer's chair on a U30C GE locomotive

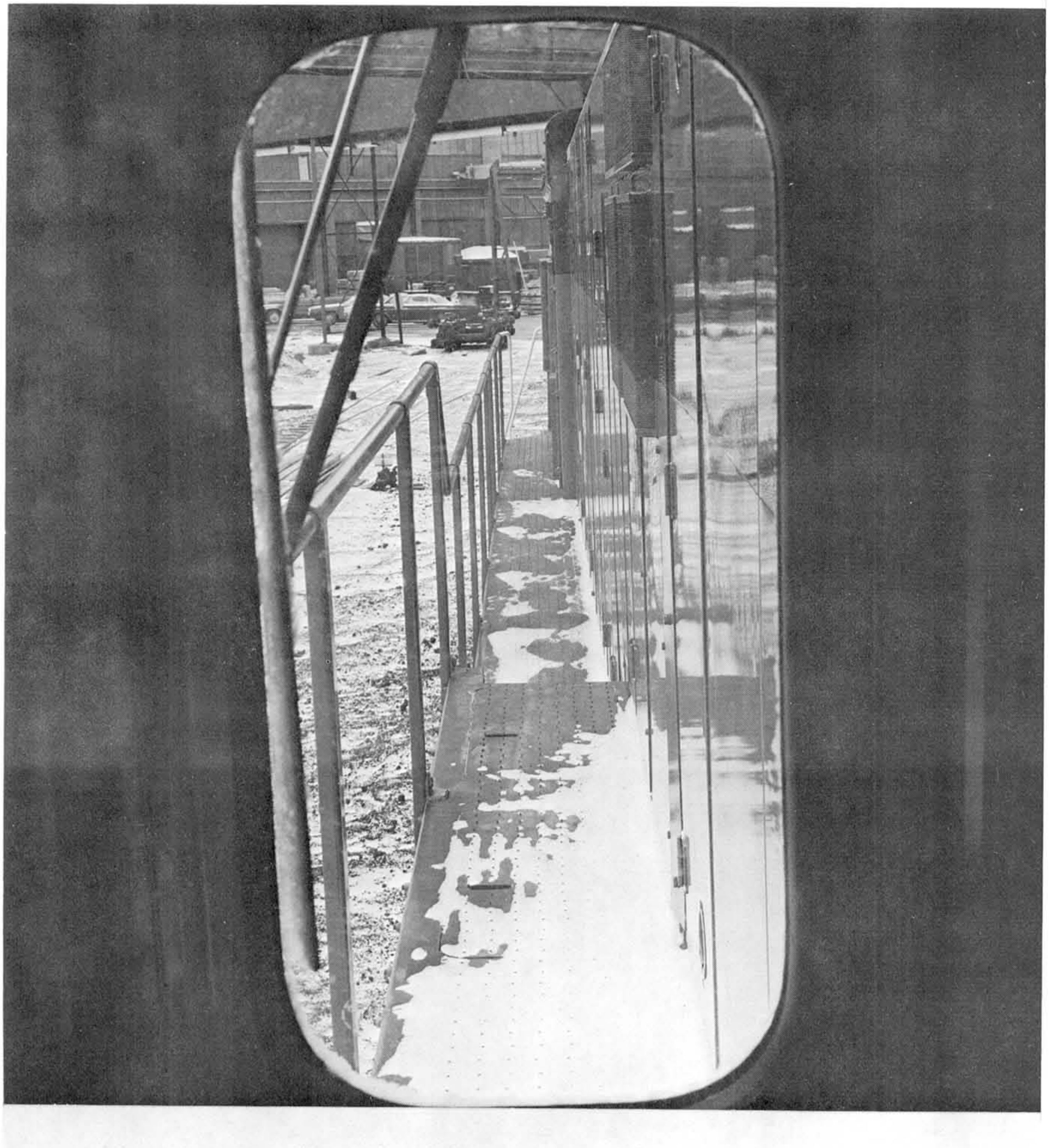

Fig. 1.17 View along the long hood from the engineer's chair on a U30C GE locomotive

Fig. 1.18 View through the two horizontal front windows above the short hood from the engineer's seat on a U30C GE locomotive

Fig. 1.19 View to the left side from the engineer's seat with the radio obstructing the visual field above the control stand

Fig. 1.20 The engineer's view along the long hood when leaning out of the window (corresponding to inside view in Fig. 1.17)

The figure shows the view through the front door window and through the left side windows. The visual field of the driver would be very good if not obstructed by the radio. Of course, it could be argued that the engineer does not keep his head in a fixed, unmovable position like the one from which the previous pictures were taken, and he could move and look "around" the obstructions. However, such movement should not be needed because simple rearrangement of a few instruments could eliminate most obstructions from the field of vision. Fig. 1.20 shows how the engineer can improve visibility by leaning out of the side window: the picture shows the background view taken along the long hood, corresponding to Fig. 1.17, which was photographed from inside the cab.

Fig. 1.19 shows a hand rail (left lower corner) mounted above the descent door to the short hood. Such hand rails are recommended. The location and design of some cab equipment, however, should be condemned from the human factors point of view. For example, (as shown in Figs. 1.21 and 1.22) the water cooler, installed frequently in locomotives, stands practically in the middle of the cab and obstructs the passageway. Sharp corners and edges of the cooler cabinet constitute potential danger if a person stumbled or fell. Water coolers ought to be built into the control panel flush with the back of the wall of the cab. GE modified installation of the water cooler on more recent models.

Fig. 1.21 also shows a special heater in a b25 cab. The heater, just as the water cooler, has sharp edges and obstructs the passageway. Furthermore, the pipes leading to and from the heater are freely

Fig. 1.21 Undesirable location of water cooler and heater in the middle of the cab. Note sharp edges and corners, free piping and valves (GE U25 model)

Fig. 1.22 Undesirable location of fire extinguisher and water cooler, obstructing passageway (GE U28B model)

protruding into the cab space. A person's clothing can get caught on the valve handles of the piping. The basic heater on GE locomotives has the same undesirable valve handle construction (Fig. 1.23). However, a valve of a similar construction, i.e., the regulating valve of the air brake system, is properly countersunk in the control console cabinet, the ideal configuration. (See Fig. 2.15). EMD locomotives do not have such undesirable heater and valve arrangements. As can be seen on the console installation in Fig. 1.3, there are no sharp corners, no free piping, and no protruding valves.

ALCO was the third manufacturer of domestic locomotives. The basic ALCO locomotive cab is shown in Fig. 1.24. The drawing is reconstructed from references(30,39) because manufacturing drawings were not available. This fact must be kept in mind when comparing dimensions of the illustration with corresponding data of EMD and GE models (Figs. 1.1 and 1.6). However, Fig. 1.24 contains much information about important differences in design of the cab in the ALCO Century series with respect to the other two basic models. The cab is about 115" wide, 85 1/2" long, and 80" high with a 62.5 ft^2 floor area and 444 ft^3 space. These gross cab dimensions are compatible with the other makes. However, in the ALCO locomotives the front wall is not one flat surface, as on the other models. The cab front has a wedge shape with a 130° apex angle. Thus, the engineer's front windows are 25° off the direction of motion. Such window arrangement decreases the actual area of the visual field and the possibility of color distortion should be investigated. There is one 30 x 38" slide

Fig. 1.23 Free piping and protruding hand wheel of the heater valve are undesirable (GE U28B model)

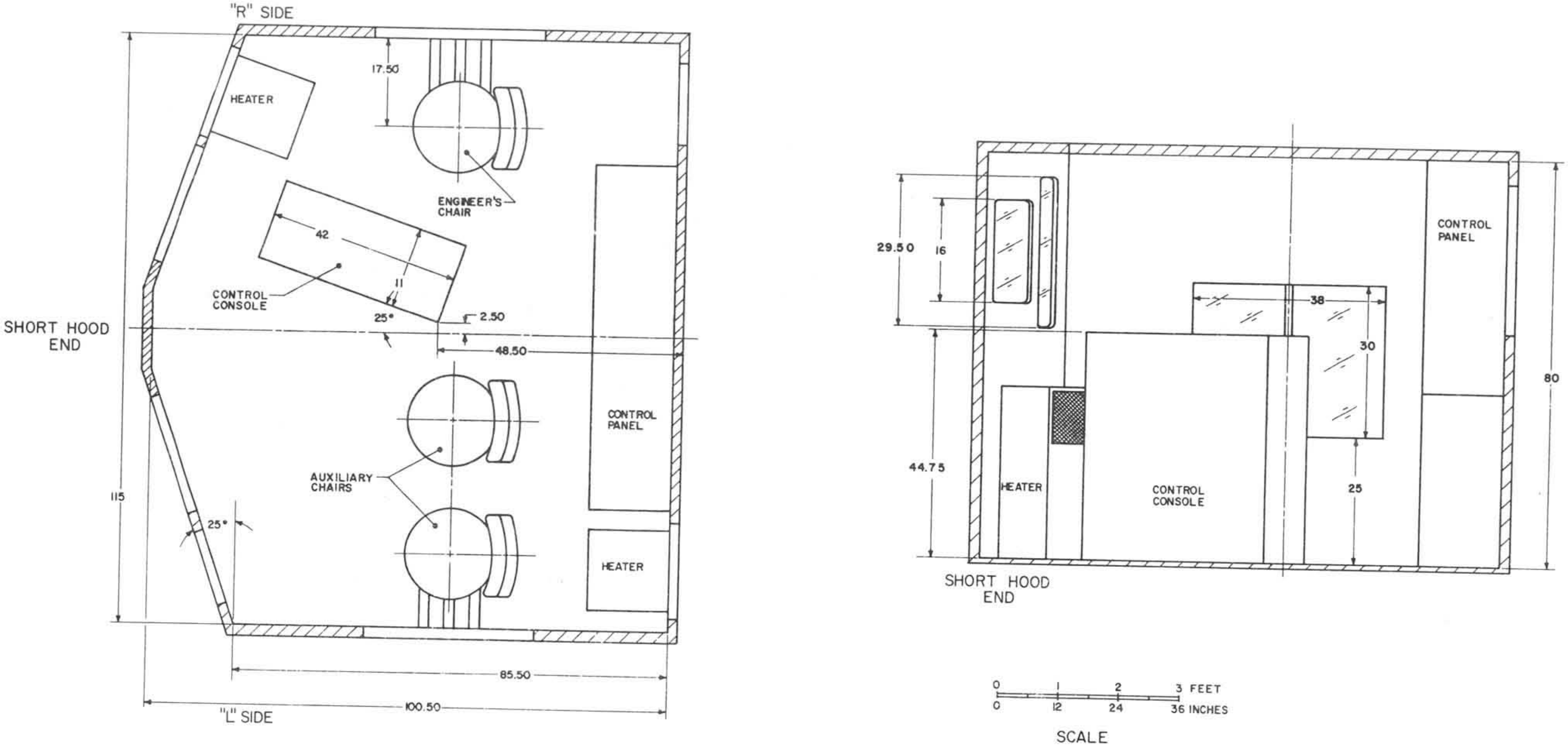

Figure 1.24 - Interior of Basic ALCO Cab (Reconstructed)

window on each side of the cab. Size of the doors is 19 1/2 x 73" with windows of 10 1/2 x 30". The engineer's window is 13 1/2" wide, 29 1/2" high, and the horizontal front windows are 16 x 36". Size of the total window area is about 30 ft^2.

Design of the control console on ALCO locomotives is unique: basically it is a simple 11 x 42 x 44.75" cabinet unlike the broken patterns of other models, which is positioned at a 25° angle to the longitudinal axis of the locomotive. Arrangement of the controls is discussed in detail in Chapter II. There are two heaters in the cab: one is in the left front corner in front of the engineer, the other is located in the right back corner behind the fireman's seat. A three seat version is shown in Fig. 1.24.

Locomotive models of all three manufacturers, discussed above, are equipped with a toiler which is built into the short hood. The only exception is GE's C series, where it is built into the long hood. However, on the corresponding models in the B series, the normal short hood arrangement is used.

Statistically every locomotive is involved in a collision accident once in every ten years, according to FRA data. Therefore, both EMD and GE build collision protection measures into the locomotive body. The short hood is made of 11 gauge steel plate on EMD and .090" plate on GE locomotives, which can provide some protection to the engineer in case of collision with a truck at a crossing. Locomotives equipped with snow plows are protected in collisions with automobiles. In rear end train collisions, frequently the lighter caboose is lifted, slides over the locomotive chassis and crushes the short hood and the cab. As protection in such accidents, two collision posts are built into the front corners of the short hood, as shown in Fig. 1.25 on EMD locomotives. The GE collision posts are built into the platform main sills and project upward into the front corners of the short hood.

Good visibility from the engineer's seat is especially important in switching. Therefore, switching engines have evolved differently from general purpose locomotives. The cab is usually mounted at the end of the chassis and the locomotive has only one hood. The windows are large, they extend frequently even below waistline of the engineer on the free end of the locomotive. The field of vision on a SW1500 switcher from the eye height of an average operator is shown in Fig. 1.26. The locomotive is manufactured in either the normal version or a 12" raised floor modification at the engineer's position. In the latter case, the cab end field of vision along the cab end of the locomotive is not affected but the view along the hood is improved. From the raised floor, the engineer can see the rails 3'7" closer'to the end of the locomotive. When the cab is raised, the visual field above the hood becomes wider (10.5° vs. 9.5°) and visibility of signals improves. The limits of vision over the catwalk become wider (24.5° vs. 22.5°) from an elevator switcher cab. The SW1000 locomotives have identical cab arrangements. The field of vision on a basic EMD locomotive is shown in Fig. 1.27.

Canadian National Railways initiated a project in June 1971 to design a locomotive cab suited optimally to the human operator. The cab is planned to satisfy human factors requirements of train operation. Construction of a full size mock-up was also planned. Fig. 1.28, adapted

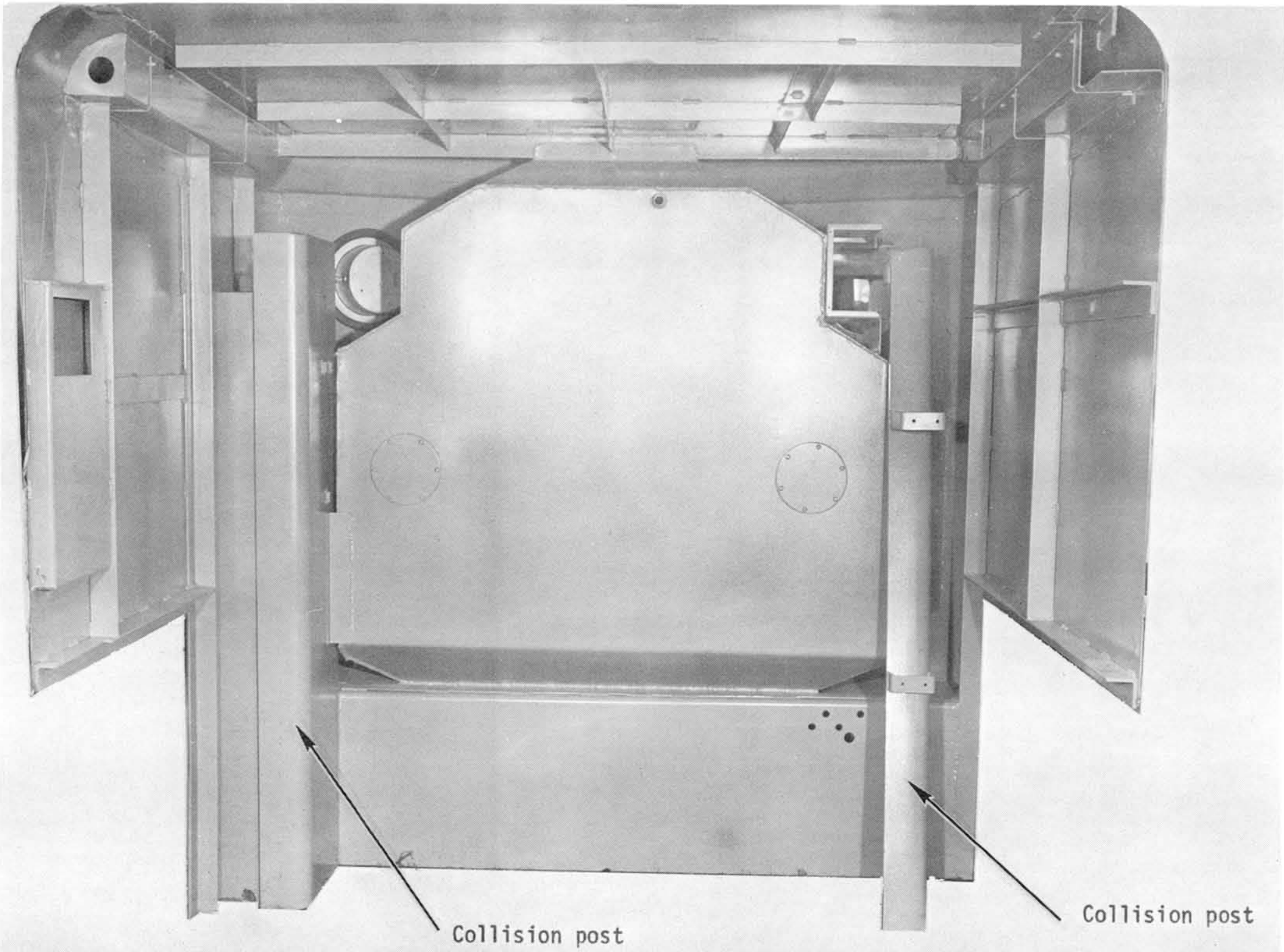

Fig. 1.25 Inside view of the short hood of an EMD locomotive, showing construction of collision posts

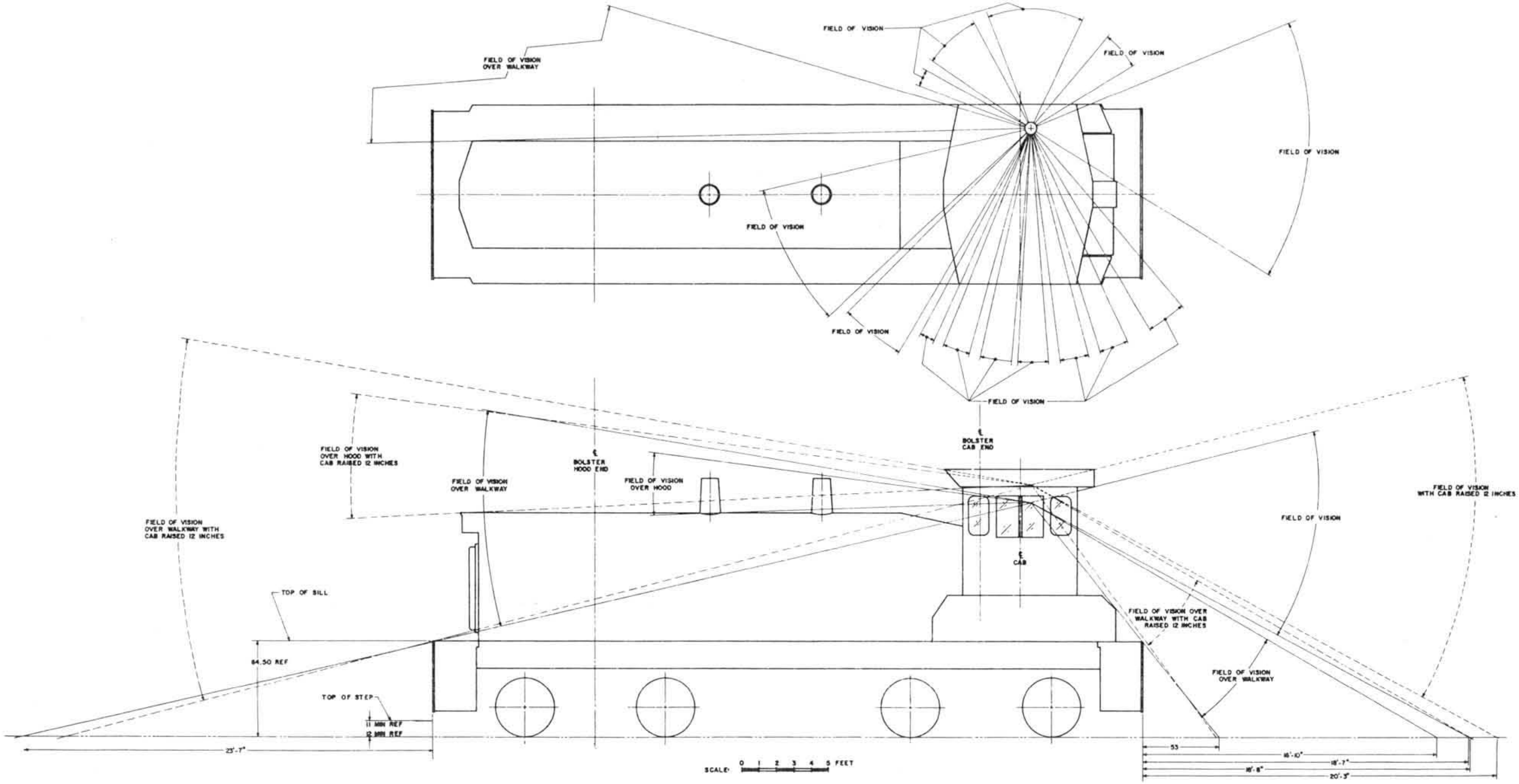

Figure 1.26 - Field of Vision from the Engineer's Chair in EMD SW 1500 Switcher

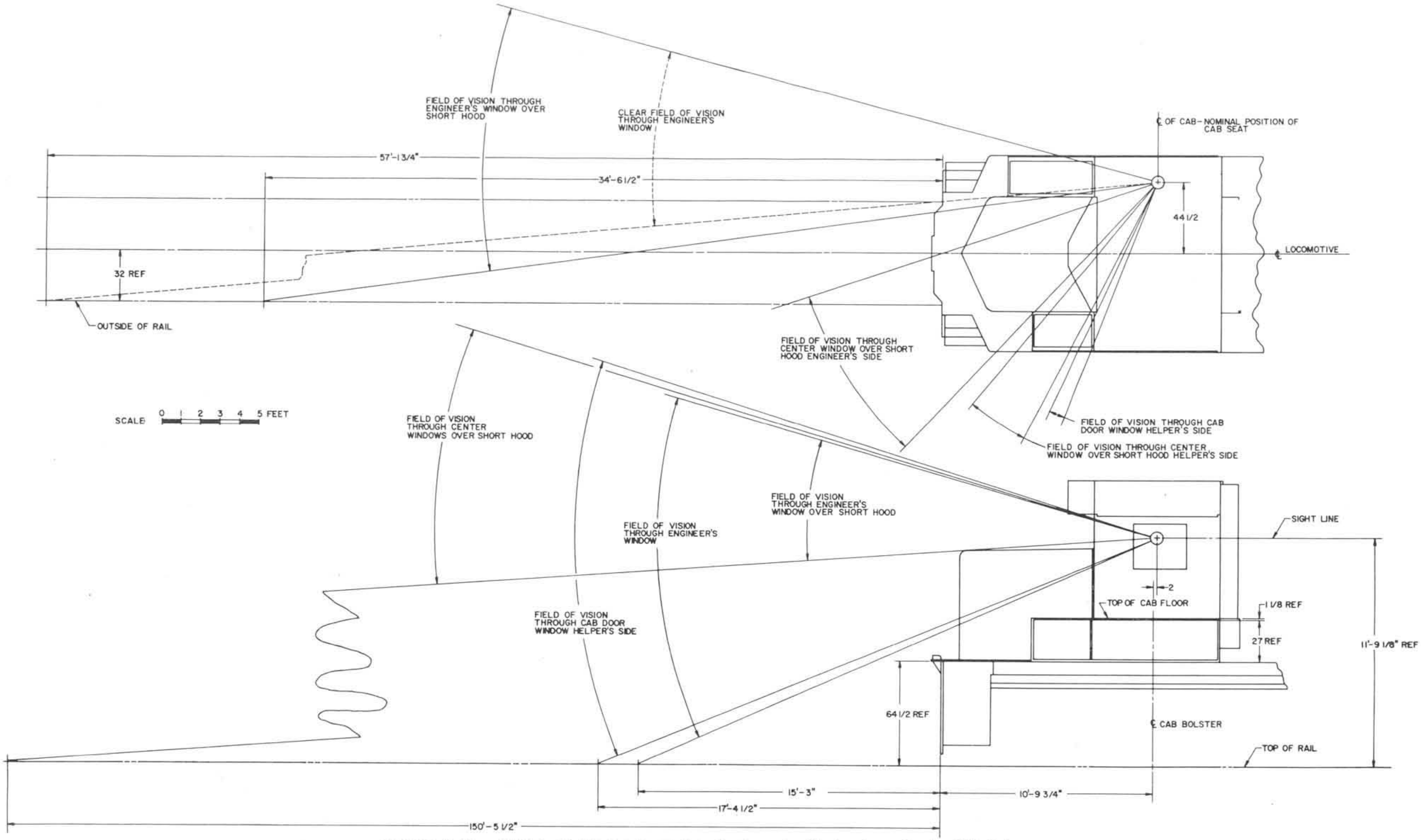

Figure 1.27 - Field of Vision From the Engineer's Chair in a Basic EMD Cab

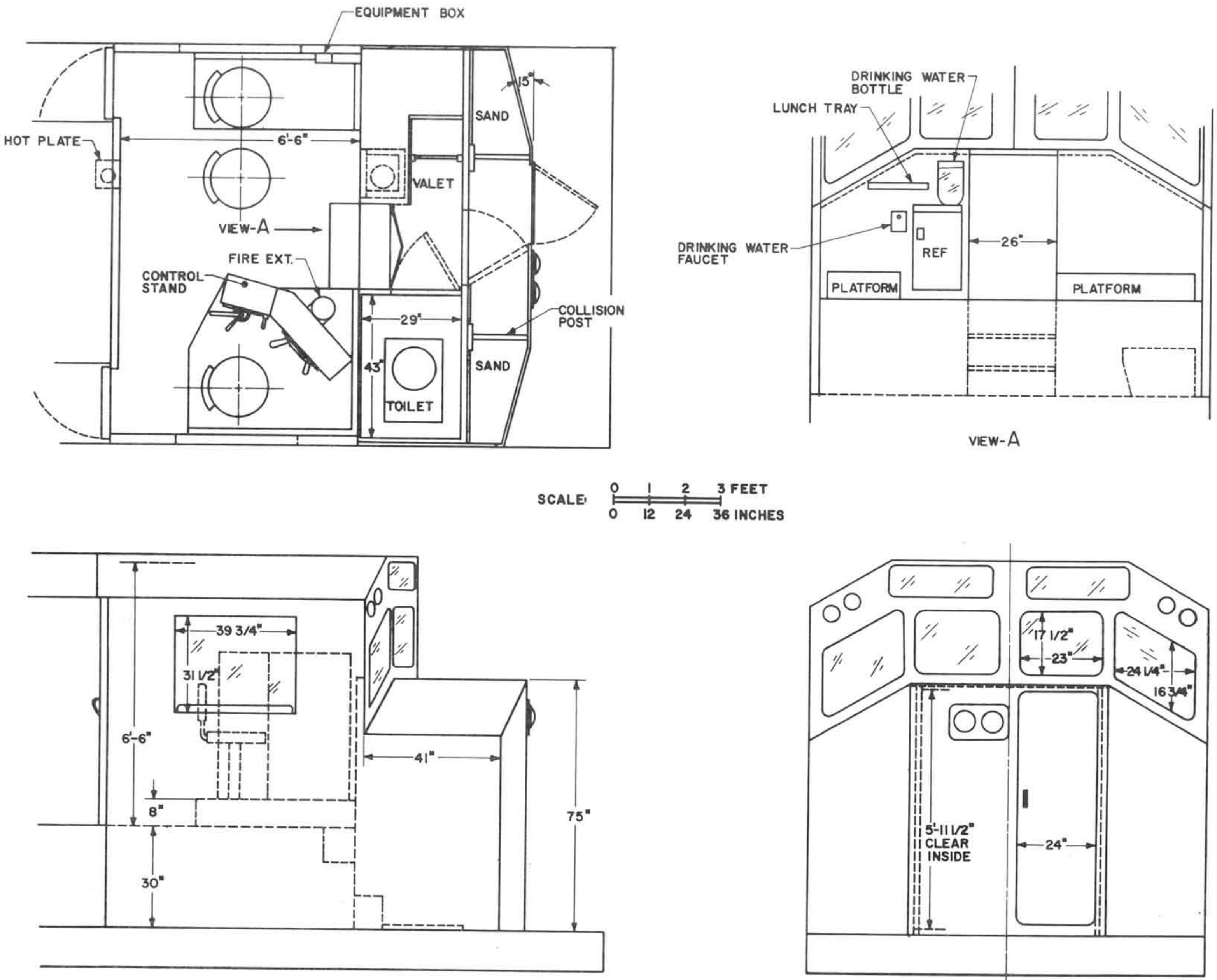

Figure 1.28 - Interior of the Proposed Standard Cab, Canadian National Railways

from Canadian National Railways Project No. 7131, shows the proposed layout of the cab. Wall arrangement seems to be an adaption of the basic ALCO design (Fig. 1.24), but the interior arrangement of cab equipment is new. The control stand will be based on the new A.A.R. recommended standard as detailed in A.A.R. circular No. DV1768 dated May 22, 1972; food warmer, and drinking water will be provided; an ash tray and clothes closet are planned to be standard items. For improving crew safety, strengthened cab structure, full width short hood, redesigned collision posts, snow plow, deflective anticlimbers, good visibility, positive fresh air exchange, and a back door on both sides are recommended. For personal comfort improved heating and elimination of drafts, refrigerator, a full height and ventilated and heated toilet room, improved seats and arm rests, lunch tray and beverage holder, and anti-glare glass are proposed. Development of such a standard cab for domestic locomotives should be greatly encouraged.

Table 1.1 is presented to summarize the size of available free space in the cab on various locomotive models. Data of the table show the floor area and the volume of free space in domestic and foreign locomotive cabs. Table 1.2 summarizes the window-area-to-floor-area ratio. The area of the total cab window surface is compared to the area of cab floor in order to indicate visibility conditions on different locomotives. On some EMD switchers, some windows are eliminated, as option, to give the crew more protection from thrown rocks. Furthermore, too large window area increases the heat load in the cab. The cab becomes too hot in the summer and too cold in the winter.

TABLE 1.1

AVAILABLE FREE SPACE IN LOCOMOTIVE CABS

	Floor Area (ft^2)	Space (ft^3)
EMD Basic Cab	59.5	376
EMD Switcher (SW1500)	58.2	367
GE Basic Cab	64.5	409
ALCO Basic Cab (Approx.)	62.5	444
Canadian National	59.0	369
West German Recomm. Optimum(154)	35.5 (70x73")	234
West German Recomm. Optimum(49)		350-530
West German Average(49)		280
Polish diesel locomotives(79)	23.2-24.2	229-238
Polish electric locomotives(79)	25.3-30.7	269-337

TABLE 1.2

WINDOW-FLOOR RATIO IN LOCOMOTIVE CABS (AREA OF TOTAL WINDOW SURFACE TO AREA OF CAB FLOOR)

	Window Floor Ratio
EMD Basic Cab	0.48
EMD Switcher (SW1500)	0.87
GE Basic Cab	0.64
ALCO Basic Cab	0.48
Canadian National	0.53
Russian Recornendation (min.)(97)	0.40
West German Recommendation (min.)(154)	0.40
Polish diesel locomotives(79)	0.59
Polish electric locomotives(79)	0.56

1.3 Work Space Recommendations

Design of the locomotive cab as a work space comprises three fields of human factors engineering: (1) work space dimensions, (2) location of controls, and (3) visibility.

(1) Work Space Dimensions: Gross dimensions of the engineer's cab on domestic locomotives satisfy relevant human factors recommendations. A minimum of 76" height allowance is recommended for work places to provide clearance for standing operations.(92) Most of the locomotives have 75" below the ceiling. As a minimum, 65 to 100 ft^2 floor area is recommended per worker for industrial applications. The floor area in domestic locomotive cabs is 60-65 ft^2 which could be considered adequate since the operator is restricted to the driving position during operation of the train and is not required to move from one position to another when performing his function.

Fixtures and controls should be designed in such a way that cloth snagging, head bumping, and bumping into sharp corners or edges is minimized. Thus it is recommended that heaters and water coolers be recessed into the cab wall. Regulating valves on GE locomotives should not be protruding, free piping must be covered by the breaker housing. Hand rails should be mounted in the cab above the horizontal front windows and on the inside of the door frames. The top part of the door frame, leading into the short hood compartment, could be painted with the usual warning signal code of yellow and black stripes. Stairs descending into this compartment should be illuminated. Stair dimensions should correspond to recommendations: 30 to 45° of incline angle, 7-7 1/2" rise, 9 1/2-11" tread depth.

It is recommended that the front doors open outward, doors to the engine room and nose compartment open outward from the cab interior. General purpose locomotives (road-switchers) should have the doors at back wall, one on each side leading to the walkways. Similarly, one door on each side, opening outward, should lead to walkways on switcher locomotives. The present door in the middle to the crosswalk should also open outward.

(2) Location of Controls: The workspace envelop of controls must be compatible with the anthropometric dimensions of the user population. Controls and displays should be located with due regard to operator's size, his position (seated or standing), direction he can look most easily, and spaces in which he can manipulate controls best. Military human factors standards specify that for seated operations the seat should adjust vertically from 16 to 21 inches in increments of no more than one inch.(92) The support backrest must recline between 103° and 115°. The backrest should engage the lumbar and thoracic regions of the back. Armrest should be pivoted, be at least 2 inches wide and 8 inches long. All controls requiring precise and frequent operation shall be mounted between 8 and 30 inches above the sitting surface. Displays mounted on vertical panels and used in normal equipment operations must be placed in an area between 6 and 48 inches above the sitting surface. Indicators that must be read precisely and frequently must be placed in an area between 14 and 37 inches above the sitting surface and no further than 22 inches from the centerline.

However, in application of such data to cab design, due consideration must be given to the unique work requirements of locomotive operations. In the cab the controls are not located directly in front of the engineer, but to his left side when facing forward. Locating the controls on one side makes it possible that he can operate the locomotive in reverse direction with relative ease. But because of this compromise, location and arrangement of controls for forward operation are less than optimal. The controller, the brake stand, and the instruments are located in the periphery of the optimal range of reach and visual field of a seated operator facing forward. In order to operate the controls more comfortably, the engineer is frequently forced to turn and face the control console. Consequently, he must twist his head and look over his shoulder to see forward. Turning the head is tiresome and results in less time looking forward. Systematic and thorough investigation is needed to establish an optimum design for the control stand which both suits the human operator more satisfactorily and accomplishes the present requirements of train operation. The investigation is recommended to be based on the analysis of the engineer's job. A mock-up and a model unit should then be designed and built with both functions, to perform the locomotive control functions and satisfy the principles of human factors engineering. It is recommended that the all new models be verified in a three-dimensional mock-up where live subjects representing the extremes of the user expected population can actually try out the layout.

The British Motor Industry Research Association published a report to summarize three experimental techniques designed to assess the usefulness of the static mock-up method for designing cab layouts.(127) Results from the mock-up are tested for self-consistency, for concordance with drivers' preferences in their own vehicles, and in a comparison with a standard layout on the basis of driver performance in a controlled driving trial. The mock-up method is found to give self-consistent results. A mock-up is made in which the positions of the vehicle controls and seating are easily adjustable. A subject, usually a commercial vehicle driver, is asked to sit in the mock-up and to state the preferred position of the adjustable parts of the mock-up. The results from many subjects are then combined to form a layout meeting the preferences of the greatest number of subjects.

There are two further investigations which must be carried out to show that meaningful results are being obtained. One of these is to show that the preferences expressed by the subjects are self-consistent and are not influenced by the circumstances of the test. The other necessary investigation is to show that the preferences expressed by the subject in the mock-up are in agreement with their preferences in the driving cab of the actual vehicle.

In the fitting trials method care must be taken to eliminate the effect of initial settings of dimensions. The fitting trials method appears to provide self-consistent results which are obtained repeatably by different experimenters. In the construction of a mock-up, consideration should be given to features such as shape and position of windscreen, otherwise the results will not apply to the cab being designed.

All normal and emergency operating controls must be within reach so that the operator does not have to leave his normal eye-reference position. This should include auxiliary items such as ash trays, and radio controls.

The train is controlled mostly from a sitting position. Height of the top of the control console should not be more than 25" above the seating surface because short operators must also be able to see over the equipment rack. **It** is not the case when radio and remote control units are mounted on the top of the control console.

Occasionally, the engineer could operate in the standing position as an alternative or change-over from the seated position. Designing a work place which allows the man to shift his posture reduces muscular fatigue from prolonged effort in any one position. In this situation the operator's visual and manual areas must be designed to be optimal for the sitting position and the pedal areas to be optimal for the standing position.

(3) Visibility. Data on the engineer's field of vision were available for one locomotive model only (Fig. 1.26). The photographs in Figs. 1.16 to 1.20 indicate that the engineer's view is limited even from a basic GE cab which has the largest window area among all other models because of the addition of four sidewall windows. Recommendations to improve visibility or to enlarge cab window area must also consider safety of the engineer in accidents and protection against vandalism. Visibility on other locomotives than presented here must also be investigated in order to determine whether the visual field of the operator is adequate for safe operation.

2. DESIGN OF CONTROL EQUIPMENT ON LOCOMOTIVES

2.1 Literature Survey of Locomotive Cab Controls

Design and layout of cab controls on diesel locomotives evolved slowly to its present stage. Standardization has not been reached yet, but currently considerable efforts are being made by the manufacturers, railroad companies and transportation authorities to develop a uniformly accepted standard design to optimally suit the human operator.

Control design standards are being used in European countries. In most cases the layout has been designed by the different railroad authorities and has to be conformed to by all suppliers. However, in some cases the builders have set a standard and certain administrations have accepted it in the interest of the manufacturing advantage obtained thereby.(36) Examples of these approaches can be found in development of standard seats for the German Federal Railways(154) and for the Swiss Federal Railways(147) or in the design of a standard control stand by the Canadian National Railways. A similar trend is apparent in domestic locomotive development. The Association of American Railroads has proposed principles to be incorporated into a standardized locomotive cab(6) and one of the major manufacturers, GE, built a prototype control console according to the AAR recommendations (Fig. 2.15).

The importance of standardization of controls is pointed out most recently by F.D. Accord (2), General Superintendent of the Union Pacific Railroad Company. His paper concludes that without standardization of controls, the engineman operating on one railroad in the country cannot

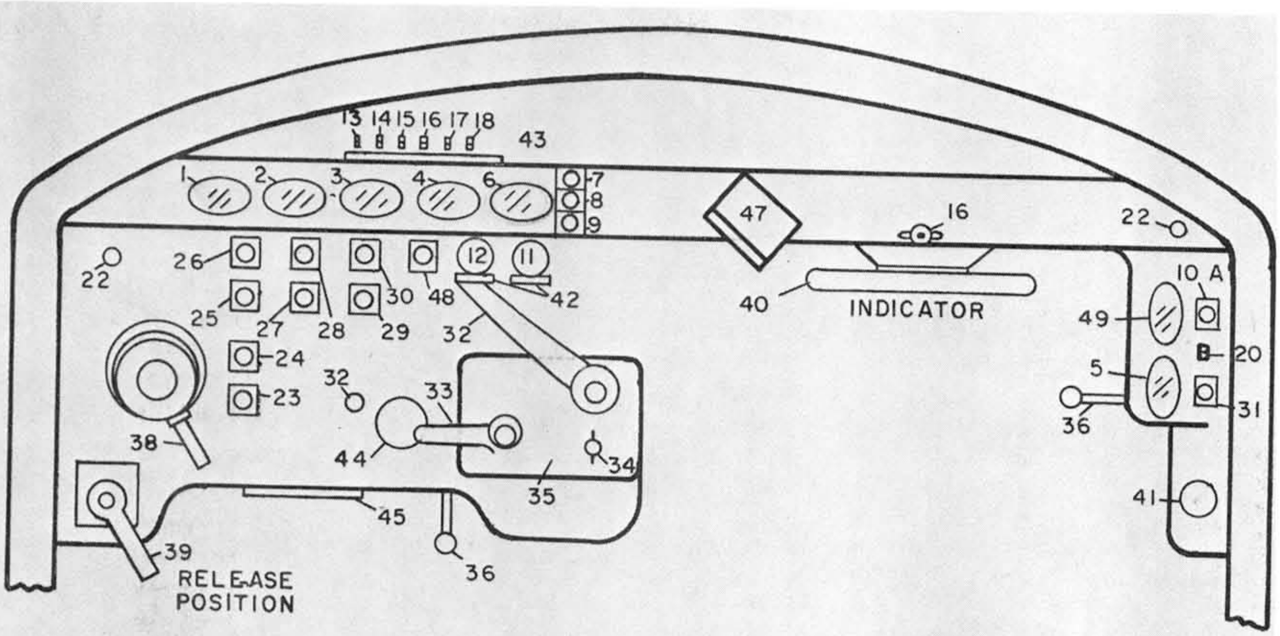

1 }
2 } Brake pressure gauges
3 }
4 - Main speed indicator
5 - Main boiler pressure gauge for steam heating boiler
6 - Main ammeter
7 - Engine stopped light (red)
8 - Wheel-slip light (amber)
9 - Alarm lamp (blue)
10 - Electric train heating light (white); bright when heat is on
10a- Boiler warning light (white) bright when boiler fails
11 }
12 } Indicator and instrument light dimmers
13 - Instrument light switch
14 - Route indicator switch
15 - Tail light switch (on/off/on) to operate either right or left rear light at adjacent end
16 }
17 } Cab half-heat switches
18 - Dimmer switch
19 - Engine room lights switch
20 - Fitted and untilted switch (in one end only)
21 - Cab light switch-two-way interconnected at adjacent end
22 - Windscreen wiper control valve
23 - Anti-slip brake
24 - Locomotive brake release
25 }
26 } Exhauster stop and start
27 } Engine stop and start (mush,
28 } room type pushbuttons of distinctive colour)
29 }
30 } Train heat, on and off
31 - Fire alarm test
32 - Main controller handle
33 - Reversing handle
34 - Control key
35 - Master controller plate
36 - Horn control
37 - A. W. S. reset switch
38 - Driver's proportioned brake valve
39 - Straight-air brake valve (locomotive only)
40 - Hand-brake wheel (may be in another position)
41 - Deadman's button
42 }
43 } Labels for dimmer and switches
44 - Sanding button (foot-operated)
45 - Deadman's treadle
46 - Scoop control
47 - A. W. S. indicator
48 - Overload reset
49 - Boiler water level gauge

Fig. 2.1.-Driver's desk layout, British Railways line-service diesel locomotives

be familiar with the controls used by others and is daily confronted with a new type of control operation which can only lead to operating errors and resultant costly problems and delays. Significant differences can be found even between the most modern locomotives such as EMD 6600 Centennial and GE U50C. (However, since the publication of the paper, standardization on domestic locomotives has progressed.) For example, after June 1971, GE used the EMD three handle controller (1970 to late 1971) pending the settlement on a standard three handle controller design by the AAR. In September 1971 the AAR adopted the GE version of the three handle controller as the AAR standard controller. Since that time all GE locomotives have been equipped with the AAR standard controller.

Standardization in Europe was significantly advanced in 1958 when the International Union of Railways (U.I.C.) began issuing recommendations to be eventually obligatory for incorporation into international European rolling stock. Some of these recommendations cover design of the engineer's control stand.

The layout of the British Railways driver's desk is shown in Fig. 2.1. As a further development a combination of controls for a diesel locomotive and an electric unit has been devised by the Southern Region of the British Railways. (Note that on domestic electric locomotives, built by GE for the Muskingum Electric Railroad, the engineer's control console is identical to that used on diesels, Fig. 2.16. There is a difference only in design of the engine control panel [Fig. 2.41 vs. 2.45]). Development of an electropneumatic brake system was reported in Britain(117) which is positioned on the left side of the control desk, as usual. The braking effort is controlled with a continuous circular controller built into the desk. The system does not need pressure line connections inside the cab, thus various effective insulation techniques could be used to achieve good environmental control for the engineer.

In France, the controls of electric locomotives have been standardized.(42) The common form of controller on electric locomotives was a "notching up" lever which moved step-by-step around a notched quadrant. An alternative was a handwheel which was turned through some 270° in a similar sequence of definite steps. In d.c. locomotives a separate handle generally had to be manipulated once or twice during notching to change motor groupings. In 1954, however, a different method of control made its appearance. The driver no longer turned the handwheel continuously in one direction to notch up, but moved it to and fro, each such action advancing the equipment one notch. The first application of the system to a large number of locomotives in France was made in the B_o-B_o "9200" class, built from 1957 onwards. Fig. 2.2 shows the driving controls in one of these locomotives. French opinion prefers to make the driver responsible for adjusting his rate of notching to suit the load and conditions of adhesion, rather than to give him means for adjusting the setting of a current limit relay as has become the practice in Belgium. Only one ammeter is fitted, and this reads the current of one traction motor. All the most recent electric locomotives, d.c. and a.c., are now being fitted with an anti-slip device. A warning light is illuminated until the slip has been corrected, and while it is showing the driver suspends notching. Referring to the diagram of the desk, Fig 2.2, the wheel-slip warnings are the center pair of four signal lamps G. Similar controls are used in the "9400" class mixed-traffic d.c. B_o-B_o locomotives.

Fig.2.3 shows the driver's desk in the "16000" class for fast main-line

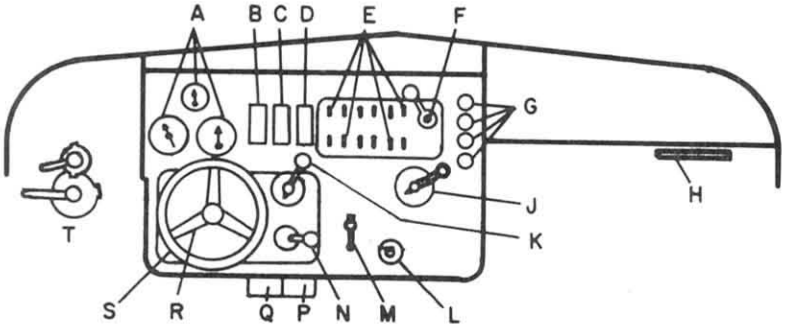

A	Air pressure gauges	L	Vigilance button
B	Line volts	M	Horn
C	Motor current	N	Reverser
D	Battery volts	P	Sanding pedal
E	Switch panel	Q	Anti-slip pedal
F	Control key	R	Controller lock
G	Signal lamps	S	Controller handwheel
H	Hand brake	T	Brake handles
J	Pantograph switch		
K	Weak-field switch		

Fig. 2.2 The first French standard control stand, introduced in 1954 for the "9200" class electric locomotives

traffic of the French Railways. The notch indicator is incorporated in the desk to the right of the controller handwheel. A traction motor voltmeter as well as an ammeter is included, and the driver must regulate notching so that a given motor voltage is not exceeded. Below the controller handwheel in Fig. 2.3 is seen the ring of the vigilance system installed on all locomotives. Unless he is operating other driving or braking controls, the driver must release his grip on the ring every few seconds, or the brakes will be applied automatically. Alternatively, he may slightly raise and depress the dead man's pedal. Figs. 2.2 and 2.3 show the present form of brake controls on the left of the desk on French locomotives. These are replaced in later construction by a single lever controlling an electro-pneumatic system. In future construction a standard form of desk will be used both for electric and diesel-electric locomotives. This standard desk has already made its appearance on the French Railways on the mainline diesel-electric locomotives, Fig. 2.4. Here the two central dials, immediately in front of the handwheel, are the diesel engine revolution counters. In the electric layout (Fig. 2.5) this panel will be occupied by the voltmeters and ammeters. The diesel ammeters are immediately to the right of this panel, a position occupied in electric locomotives by the notch indicator. In both forms of traction the extreme right-hand instrument is the speedometer, while at the opposite end of the panel are the brake gauges.

Mainline diesel electric locomotives on the French National Railways introduced a less complex control system(40) which simplifies the engineer's task by reducing manipulations necessary to operate the engine

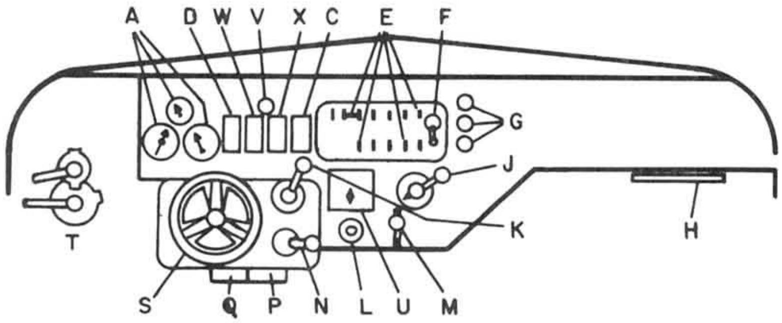

A	Air pressure gauges
C	Motor current
D	Battery volts
E	Switch panel
F	Control key
G	Signal lamps
H	Hand brake
J	Pantograph switch
K	Weak-field switch
L	Vigilance button
M	Horn
N	Reverser
P	Sanding pedal
Q	Anti-slip pedal
S	Controller handwheel with "VACMA" ring
T	Brake handles
U	Notch indicator
V	Circuit-breaker signal lamp
W	Auxiliary system volts
X	Motor volts

Fig. 2.3 Advanced version of the first French standard control stand, as used on the "16000" class locomotives

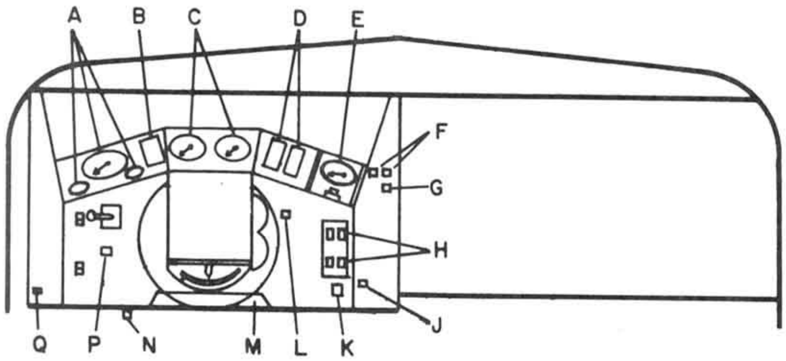

A	Air pressure gauges	H	Engine start/stop buttons
B	Signal lamps	J	Horn
C	Engine revolution counters	K	Vigilance button
D	Motor current	L	Reverser
E	Speedometer and recorder	M	Auxiliary switches
F	Windscreen-wiper buttons	N	Sanding control
G	Cab lights dimmer control	P	Train brake handle
		Q	Locomotive brake handle

Fig. 2.4 Proposed control stand for French diesel-electric locomotives

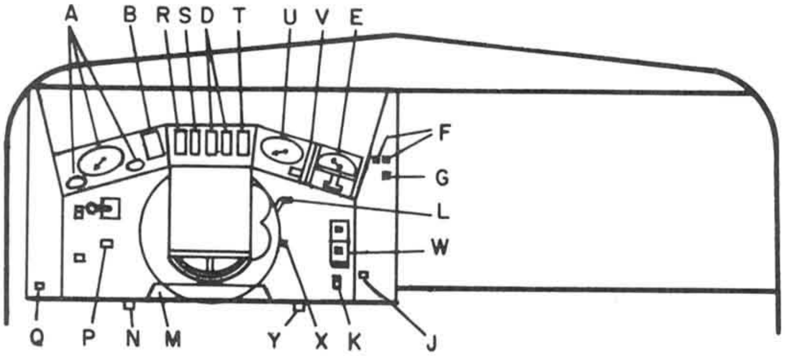

A	Air pressure gauges
B	Signal lamps
D	Motor current
E	Speedometer and recorder
F	Windscreen wiper buttons
G	Cab lights dimmer control
J	Horn
K	Vigilance button
L	Reverser
M	Auxiliary switches
N	Sanding control
P	Train brake handle
Q	Locomotive brake handle
R	Line volts (a.c.)
S	Line volts (d.c)
T	Motor volts
U	Notch indicator
V	Battery volts
W	Pantograph selector
X	Weak-field and transition switch
Y	Automatic sanding "cancel" switch

Fig. 2.5 Proposed control stand for French electric locomotives

to two controller positions; transmitting "faster" or "slower" orders to equipment. The engineer's controls and instruments are grouped on a desk. Controlling function is executed with a handwheel, located in the center; to the left is the reverse handle, to the right is the main switch. The vertical back console of the desk houses brake gauges, malfunction indication panel, two diesel engine tachometers and two ammeters. The tachometers and ammeters are duplicated so that where a second locomotive is being controlled, the engineer can monitor its engine speed and traction current.

The typical European control, as the above examples demonstrate, is a desk type console. For the German Federal Railways Wittgens(155) recommends that the control desk be built with a 10-20" incline, and the instrument wall of the console be 30-45° from the vertical. A desk height of 27-28" is recommended within the optimal area of reach of the operator. Instruments, indicator lamps, and switches must be grouped according to their functional relationship. Frequency of use is another major criterion in positioning controls. The most frequently observed instrument must be placed in the middle of the visual field (zone of 60° to 68° horizontally and 60° vertically). Indicator lamps should preferably show malfunctions only. The direction of turning off and on must be the same on all switches, the direction of motion of a knob must correspond to the motion of the activated indicator.

Another German work(49) lists a series of recommendations for good human factors design of the engineer's control stand. It is recommended that the European control desk should be at about the height of the elbow and about 33" above floor level. Provision should be given for ample knee space, which thus makes only a 4-6" thick desk possible. The desk top should incline slightly toward the operator. The instruments should be in the optimal visual field of the seated engineer and the controls in the optimal range of reach. Emergency equipment must be located so that the engineer can reach it both from seated and standing positions. Frequently used instruments must be in the center 'of the visual field with the less frequently used ones placed peripherally. Handbooks are available which contain data on the area of reach and the visual field of a human operator. Round instrument faces are recommended, positioned normal to the line of viewing; the shape of the numbers could be improved for maximum differentiability as found in an Italian railroad investigation (quoted in Ref. 49). Instruments fulfilling similar functions should be grouped and positioned with their normal setting in the 9 o'clock position. Control lights should be illuminated only when malfunction is indicated and never during normal operation. A color code could be developed to help identify various types of malfunctions, and a combination of both light and acoustic signals could be advantageous to indicate certain malfunctions.

The design of controls has special significance for city transit cars.(11,126) A study, conducted in Hamburg, Germany(122) showed that the operator has to stop the train in every 2 1/2 min on the average which, during an eight hour shift, amounts to about 250 departures and stops with all the necessary switching, accelerating and braking operations. The fact that the time schedule must be followed within one-tenth of a minute tolerance increases the stress of driving even further.

Illumination and dark adaptation problems of the locomotive engineer constitute an important area of human factors research in the railroads.(106,141,143) Relevant German literature recommends two different solutions. Goerlitz(49) suggests continuously adjustable illumination for instruments in order to eliminate interference with dark adaptation of the engineer. The illumination level must be kept at least 20 times higher than the background. Exits and emergency exits must also be sufficiently illuminated in the cab. The use of an ultraviolet light source and fluorescent instrument markings is recommended as another possible solution.(154) This suggestion is based on the hypothesis that observation of light signals could be achieved optimally with this method. A wavelength of 366nm is recommended as one having minimum undesirable physiological side effects. This latter study recommends that illumination level of an object must be at least three times higher than the immediate surrounding and maximum ten times more than the general background.

A domestic study found that complications involving dark adaptation occur when a train coming in the opposite direction passes.(125) The bright headlight of the approaching train first shines into the cab of the train and destroys dark adaptation of the engineer. As the train is approaching, the headlight on the opposite train is extinguished, and a few seconds later a dim light is put on. After the trains have passed the bright light is again put on. This procedure could be eliminated as a source of dark adaptation interference by simply polarizing the operating front window of the unit and using a 90 degree angle glass in the headlight of all locomotives and diesel units. Such a procedure is very impractical with automobiles or buses due to the impossibility of getting everybody in line at the same time but with the railroad the procedure could be utilized advantageously to eliminate the blinding effect.

Since the cab has glass on three sides, and these glass panels are perpendicular, there is a large amount of reflected glare from every light that the train passes. This intermittent glare interferes according to its brightness level with the dark adapted eyes of the operator.(125) Protective curtains could easily be arranged to reduce this particularly during night operation through populated areas.

Several reports are available on development of efficient signal systems. A general survey of developments leading to modern signalling techniques also summarizes the theory of signaling methods, improvements realized with the introduction of electronic and automatic control techniques.(22,32,34) Requirements of light signals in railroad application are different from those in road traffic, according to a German study.(20) Narrow dispersion angle and high brightness are necessary for perception of signals at a great distance. Restriction of railway personnel to those who are not color blind, means that no additional symbolism such as the application of arrows, size, and shape differentiation is necessary. British Standard #469, 1960 contains the specifications for electric lamps to be used in railroad signaling systems.(19) The standard also specifies technical requirements and methods of tests to be used for determining quality and interchangeability of lamps in indicators, searchlight signals, illuminated diagrams and control panels, position light junction indicators and multi-aspect color light signals.

Improvements are reported to increase brightness of flashing light grade crossing signal by over 400% with a simple design change in the bulb.(83) Preliminary tests to determine feasibility of a reflectorized bulb concept were made using the Association of American Railroads No. 88 bulb aluminized over one-half its area; this paper also presents beam pattern of signal and light intensity distribution along the vertical axis. Another study,(86) aimed at improving railroad light signals, presents a chart for obtaining the visual range of colored point sources of signal lights; a diagram is based on the threshold value of 50% detection obtained in a laboratory experiment; factors determining visual range of point sources are discussed and the visual range of the lights is described.

For improving perception of roadway signals by the engineers changes are proposed concerning the location of these signals.(120) An amendment of the present rules is suggested that would lift the prohibition in the existing rules against left-hand signals, and require only that each signal be so located that it can readily be associated with the tracks on which it governs movements.

There are attempts to provide information to the engineer inside the cab on the railroad signals in addition to traditional displays.

British Railways introduced a unique signalling system in cabs of switching locomotives.(113) A display located inside the locomotive cab shows a replica, in miniature, of bump signal aspects of the marshalling yard, providing continuous visual information to the operator. A constant two-way radio communication is also maintained between the engineer and the control room. Burlington installed a cab signaling system(111) in which wayside signals are displayed continuously in the cab with a color light system displaying automatically route line up and track occupancy. In another signal display information system, the route information concerning past, present, and oncoming signal conditions is relayed to the train for presentation to the engineer.(99)

One system designed in Japan(46) displays signal position, coupled with an additional sound alarm for stop signals. Audio frequency signaling methods are employed with a carrier frequency of 1920 Hz, and modulation frequencies of 15, 20, 30, 40, and 80 Hz, superimposed on 60 Hz normal signaling current.

An on-board signal and speed control system employed by the Chicago Transit Authority for its Lake Street line uses high frequency track circuits to carry information and instructions directly to the motorman.(153) The system provides five speed commands, including a stop command. Each of the speed commands is enforced by automatic overspeed control.

More recent developments of the above cab signaling systems are also reported.(116) This new display system provides the engineer with not only an indication of the passed and approaching signals, but has an automatic speed control system. Distance between the locomotive and the approaching signal is displayed in digital form, and the engineer is in a two-way speech communication with the control center.

The application of VHF radio communication has been tried on the German Federal Railways instead of wayside signals.(44) Both signaling problems and remote control of locomotives have been tried in main-line operation as well as in switching and short distance traffic. Radio communication proved to be advantageous when provided to switch crewmen in yard work.(119) The switch crew carried pocket size transmitter-receiver radios in ground work. The radio unit could be worn in a chest harness permitting the wearer to have his hands free to throw switches, climb on freight cars. The antenna is "dibble" type, flexible wire that hangs down from the unit; the radio weighs 37 oz., has 1.4 watts of RF power, and can operate through the base station repeater to provide coverage over the entire yard.

Recent progress in automation of the British Railways is reported. (114,115,118) The approached and passed signals are displayed in the cab for the engineer.(4) Data utilized by the system are processed in two small computers on the train and the distance run to the signal and train location are displayed in digital form. The next step in development is planned to be the incorporation of a speed supervisory system. In the Soviet Union, for automation of railroad controls, design, and application of control computers has also been matched to the capabilities of the human operator to achieve optimal performance.(157)

The significance of human element in railroad signaling is pointed out in a National Transportation Safety Board Report.(94) Railroad signaling systems, even though performing as designed, do not compensate for human failure and prevent accidents. A relationship has been developed between signal system, operating rules, and the human element that is responsive to both. Specific cases are cited in which the discrepancies are exposed and examined within the context of a functionally coherent man-machine system.

Krasovskiy(80) also emphasizes that due consideration must be given to the operator's sensory capabilities. In development of future automatic railroad systems the importance of the proper distribution of the workload between the man and the automatic device must be fully understood.(24) Man has definite parameters and limitations which must be taken into account in designing the system such as: (a) the human neural system can effectively handle only one signal at a time; (b) a signal arriving during the time of processing of the previous signal is perceived and stored; (c) when the number of incoming signals increases, the operator transfers them into the long-term memory (for recall) which requires additional time; and (d) human capacity for attention can extend to no more than approximately seven objects simultaneously. Reduction of the operator's workload must be resolved on the basis of human factors engineering principles, such as the application of the optimal form of information display; partially or completely automating decision making; improving control actions by development of rational designs of the controls.(80) In studying causal factors of highway and railway accidents, visual attention has been analyzed in terms of information theory by means of a test of the single channel hypothesis, which suggests that messages (signals, stimuli, patterns, etc.) are processed one at a time, i.e., sequentially by a central information processing mechanism.(87) The various experiments have provided data that tend to confirm this hypothesis.

Not all possible sensory channels of the individual are fully utilized in railroad controls. The auditory system is one which seems to be the least strained. Therefore, signaling information could be also given through the application of tone signals. Menkes(91) reported developments of a tone signaling system as adaptation of radiotelegraphy to railroad telegraph transmission on control signals and report back signals in remote supervisory control systems and status signals. The application of auditory signals to the locomotive engineer could be another method to distribute input information more evenly or reinforce other sensory channels with auditory signals.

Hughes Aircraft Company(67) prepared a literature survey on command control of high-speed ground transportation systems. The report also reviews the state-of-the-art in railway command and control systems, proposals and design concepts of automation systems, car detection and identification techniques, but does not discuss the human element and system design criteria for the human operator. Train control systems are analyzed from the system engineering point of view and the sensing, processing, controlling, communication, and display elements are explored in detail in respect to hardware but not to the human requirements of the system. In the design of a good signaling system, due consideration should be given to the human component both from a psychophysical point of view and from the vast personal experience of the operators.(66)

Safety in railroad operations is the result of mutual interaction of a large number of precautions, safety rules, and safety equipment, such as cab warning devices, signal and switch apparatus, safety tracks, railroad crossing protections, avalanche warning devices, falling rock detectors, train dispatching communication system.(128) To achieve the highest safety level of the whole system, priority and significance of development of the system components must be optimized. A mathematical model is presented in this paper on how optimization in the development of railroad safety devices can be realized within a total prescribed cost. Simple summation of best solutions of the components, section by section, region by region, year by year might not necessarily reflect the optimality of a system on the whole in the long run.(1)

2.2 Controls on Domestic Locomotives

Design of the controls located inside the engineer's cab are discussed in this chapter from the human factors point of view. Two major groups of control equipment are located inside the cab: (1) engineer's control stand, and (2) engine control panel.

(1) The engineer's control stand houses equipment which the engineer operates routinely to drive the locomotive. Functionally the controls separate into two distinct groups:

(a) Air brake system, comprising the automatic and independent brake systems.

(b) Control unit which includes:

- selector lever
- reverse lever (except on two-lever GE models)
- throttle lever
- pressure gauges
- load current indicator
- switches and indicator lights

(2) The engine control panel located on the rear wall of the cab contains indicators, switches, circuit breakers, and fuses which do not require constant activation during normal operation.

A comparative study of the engineer's control stand on locomotives of different makes reveals that all three manufacturers included functionally identical equipment and the three types of locomotives can be operated in multiple with each other. Similar functions are controlled by similar equipment:

- levers are used for throttle, reverse, and selector controls, for the brakes and for activating the air horn.
- display dial gauges are used for indication of air pressures, load current, and speed.
- switches are used for engine and generator control, lights, dimming, and sounding.
- push buttons for ground reset, attendant call, and bell operations, and
- indicator lights to show state of engine conditions.

The braking system, control switches, push buttons, and indicator lights are similar on locomotives of all manufacturers though their location and shape are different. Details of the EMD control stand are described first, and respective differences will then be pointed out later in the chapter. Figs. 2.6 and 2.7 show the control stand on recent EMD locomotives. Fig. 2.8 illustrates photographically the relative position of a seated engineer with respect to the stand in the cab. The controller, located on the right, consists of the selector handle, throttle handle, and reverser handle. The selector handle has three positions: power, park, and braking. Its position is indicated in an illuminated window directly above the selector lever. On models built before June 1971 the lever is spring-loaded and returns to center position after each movement. On models built after that date, the lever is not spring-loaded and will remain in the position it is placed. The reverser has three positions and controls locomotive movement -- forward, idle, and reverse. The throttle lever controls engine power and speed. It has ten positions, namely stop, idle, and running speeds 1 through 8. Each of these positions is displayed to the

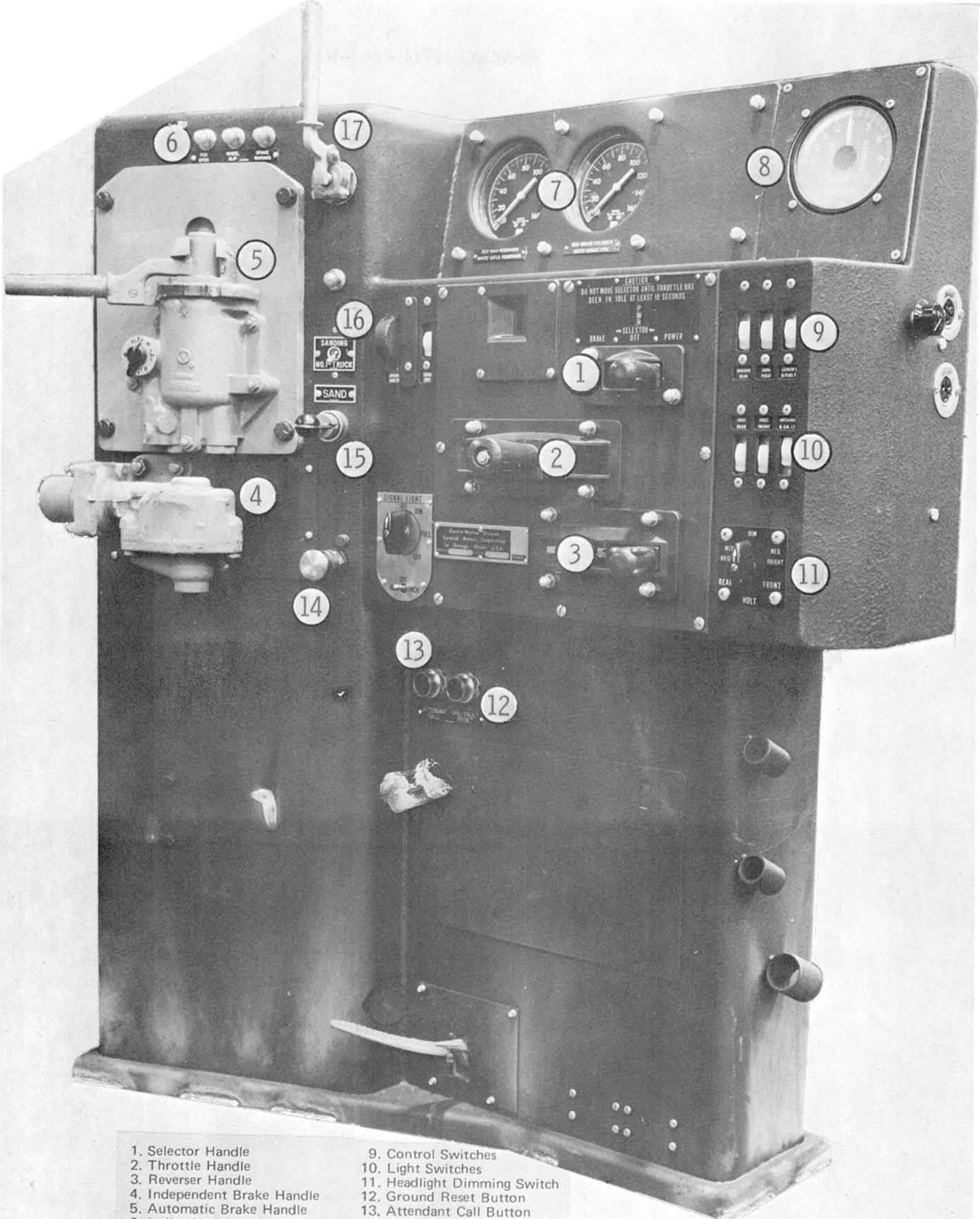

1. Selector Handle
2. Throttle Handle
3. Reverser Handle
4. Independent Brake Handle
5. Automatic Brake Handle
6. Indicating Lights
7. Air Gauges
8. Load Current Indicating Meter
9. Control Switches
10. Light Switches
11. Headlight Dimming Switch
12. Ground Reset Button
13. Attendant Call Button
14. Bell Ringer
15. Sanding Switch
16. Lead Axle Sanding Switch
17. Air Horn Valve

Fig. 2.6 Basic control stand on EMD locomotives

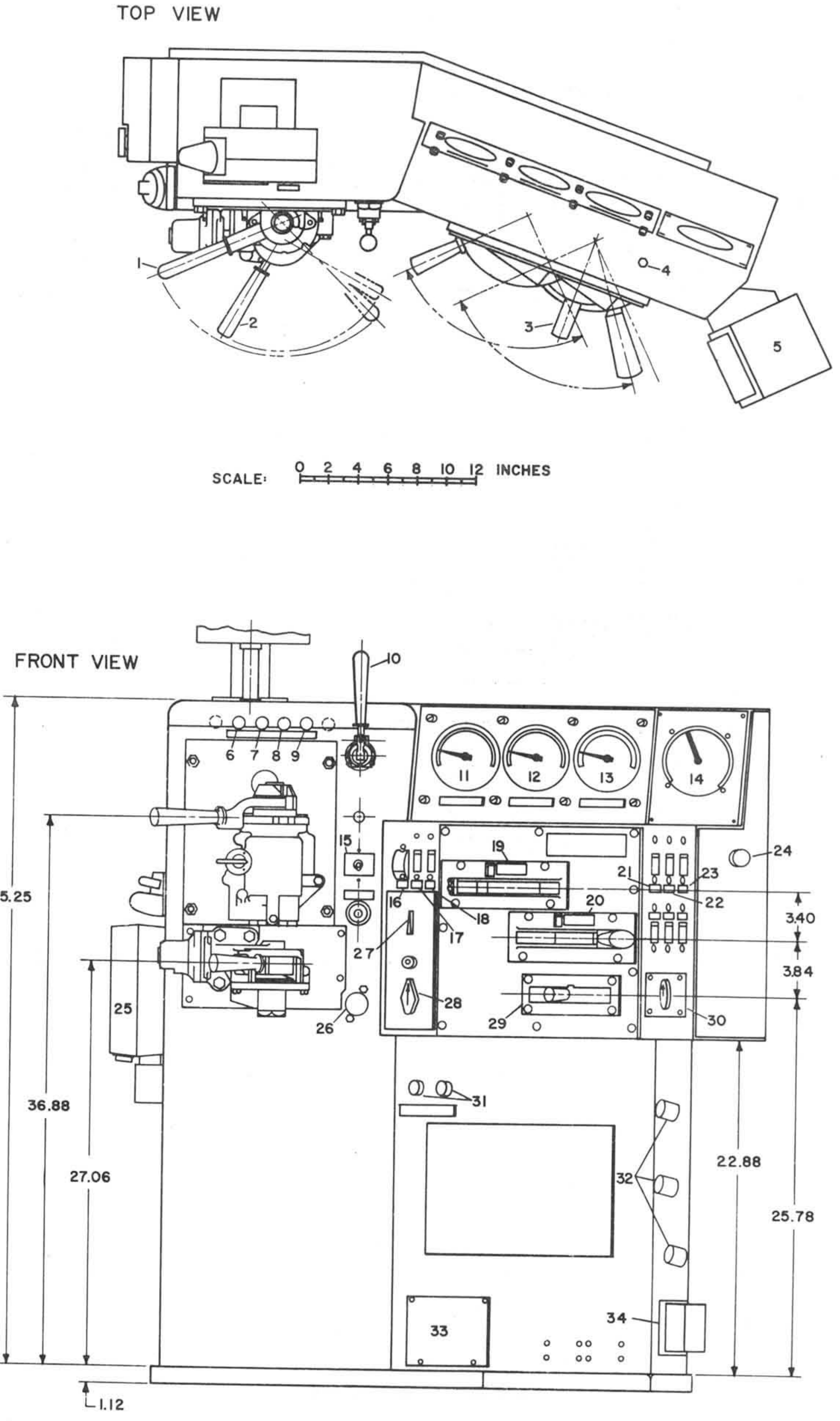

SEE EXPLANATION OF ITEM NUMBERS ON NEXT PAGE

Figure 2.7 - Basic Control Stand on EMD Locomotives

EXPLANATION OF INDEX NUMBERS IN FIG 2.7

BASIC CONTROL STAND OF EMD LOCOMOTIVES

1 - Auto B. V. Release
2 - I.B.V. Release
3 - Directional Handle
4 - Speed Indicator Rheostat
5 - Speed Indicator
6 - Signal Light
7 - P.C.S. Open
8 - Wheel Slip
9 - Brake Warning
10- Horn
11- Main Reservoir Indicator
12- Brake Cylinder Indicator
13- Brake Pressure Flow Indicator
14- Brake Power Indicator
15- Sander
16- Dynamic Brake Control Indicator
17- Fast-Slow Indicator
18 - Signal Light Reset
19 - Dynamic Brake On-Off Switch
20 - Power Throttle Lever and Indicator
21 - Engine Run Indicator
22 - Generator Field Indicator
23 - Fuel Pump Indicator
24 - Gauge Light Rheostat
25 - Radio
26 - Bell
27 - Power Reduction Indicator
28 - Power Reduction Lever
29 - Reverser
30 - Headlight Bright-Dim Indicator
31 - Attendant Call-Reset Indicator
32 - Brake Handle Storage Racks
33 - Provision of Dead Man Pedal
34 - Buzzer

Fig. 2.8 Control stand on EMD locomotives

engineer in an illuminated indicator window in the upper left corner of the controller. The driver increases diesel engine speed by pulling the throttle from its farthest position toward himself. The handles on the controller are interlocked for safe separation and avoiding accidental incorrect switching of the controls. Basically interlocking prevents changing position of both selector and reverser when the throttle is above idle and the reverser cannot be moved when the selector is in braking.

Brake equipment is located to the left of the controller. It consists of two separate valves: the automatic brake valve and the independent brake valve. The automatic valve is designed for regulating brake-pipe pressure to control both locomotive and train brakes. The independent valve will apply and release locomotive brakes independent of the train brakes. The independent valve also controls the release of the locomotive brakes (due to an automatic brake application while in force) without releasing the train brakes. Figures 2.9 and 2.11 show operating positions of the brake levers. There is no difference in operation of the brake system on locomotives made by different manufacturers. As Fig. 2.10 shows, the positions of the automatic brake lever on GE locomotives are practically identical to those on EMD's (Fig. 2.9).

Two gauges are located on the engineer's control stand (see Figs. 2.6 and 2.7). One gauge indicates both the main reservoir (red hand) and equalizing reservoir (white hand) pressures. The other gauge indicates brake pipe (white hand) and brake cylinder pressures (red hand). A third optional gauge indicates the application and suppression pressures used in conjunction with the three safety devices (safety control foot

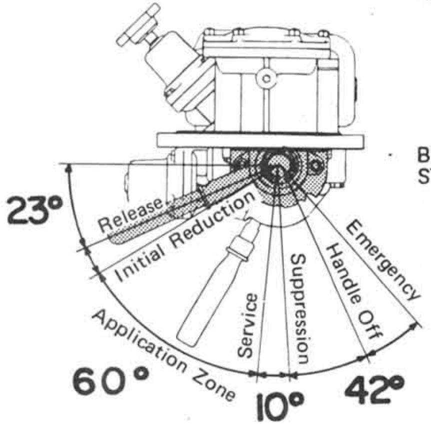

Fig. 2.9 Automatic brake handle positions on EMD locomotives

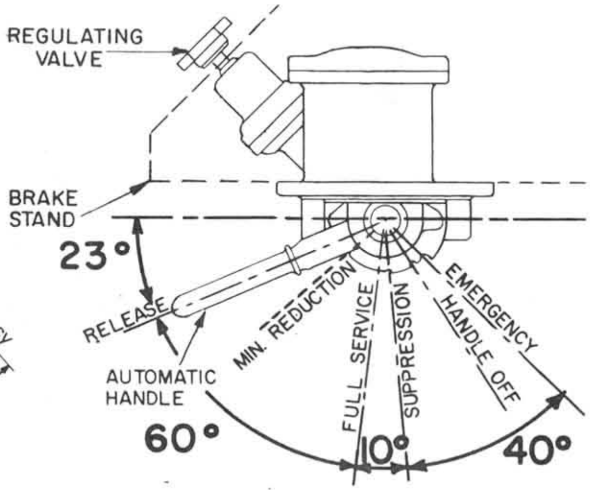

Fig. 2.10 Automatic brake handle positions on GE locomotives

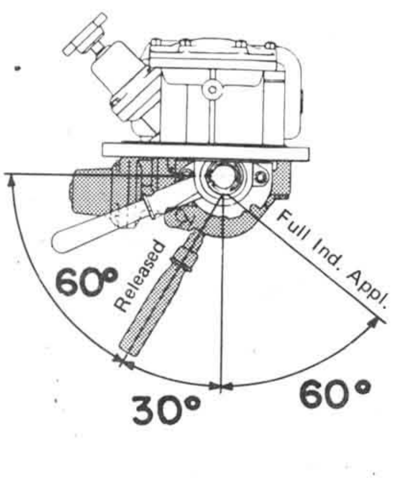

Fig. 2.11 Independent brake handle positions are identical on both EMD and GE locomotives

pedal, locomotive overspeed, and train control). The load current indicating meter is located also on the engineer's control console and it measures current flowing through the traction motors. It is an indication of the pulling and dynamic braking forces developed by the locomotive. It is graduated in 25 ampere increments from 0 to 1500 amperes. It may be color coded or equipped with a rating plate to indicate operating time limits at various traction motors loads when operating below minimum continuous speed.

A dual reading load current indicating meter is being used on more recent models to indicate the current flowing through the traction motors on separate scales for motoring and dynamic braking. The motoring scale reads from center to right, the dynamic braking scale from center to left. It is graduated in 20 ampere increments from 0 to 1500 amperes in motoring and 0 to 800 amperes in dynamic braking. The motoring scale is white, with red band from 1040 to 1500 amperes. The dynamic braking scale is yellow. This meter is standard on units built after June 1971.

Many railways provide a Brake Pipe Flow Gauge which indicates to the engineer the rate of flow of air in the brake pipe in the locomotive. This gauge is of considerable help to the engineer in determining the state of charge of the train brake system.

A group of switches is located along the front face of the controller, each identified by a name plate indicating switch function. The switches are in the ON position when moved upward. Before the engine is to be started, the control and fuel pump switch must be placed ON. To obtain power from the locomotive, the generator field switch must be ON. To obtain control of engine speed, the engine run switch must be ON. These three important switches are grouped at the right side of the controller. They must be placed in the OFF position on controllers of trailing units. The sand switch will sand the front of the number one truck (lead truck) of the locomotive. When it is being used, the sand light will be lighted. This method of sanding dresses the rail and is adequate for most operations. The trainlined sanding lever will sand all units in the locomotive consist. The sand will flow in the direction the locomotive reverser is positioned (forward or reverse). The manual emergency sand switch is used to sand in both forward and reverse directions. A red indicating light above the switch will be lighted when this switch is on.

A five position headlight dimming switch is located on the controller to the right of the throttle. In one position it provides for dim headlights on both ends of the locomotive. In the other four positions it provides for a bright or medium headlight at either the front or the rear of the locomotive.

Several push buttons are usually mounted on the control console. The ground reset pushbutton resets the ground relay. Attendant call pushbutton rings the alarm bell. It is used as a communicating signal on the locomotive consist. Alarm bell silencer and indicating light (optional) consists of red pushbutton with an indicating light inside the button. When any protective device connected to the alarm circuit trips, the alarm bell will sound. Momentarily pressing the alarm bell silencer (red pushbutton) will silence the alarm bell and light the alarm indicating light inside the pushbutton. The light replaces the bell in indicating a protective device has tripped. It will remain lighted until the protective device has been reset or the affected unit is isolated. The four indicating lights provide visual indication of the following locomotive operating conditions: (1) Wheel-slip - intermittent flashes of the wheel-slip light indicate a wheel slip has occurred on the locomotive consist. However, a wheel slip light flashing slowly and persistently or a constant light may indicate one pair of wheels is sliding. (2) P.C. Open - when this light is on it indicates the power cut-off switch has tripped, which will prevent the engine from responding to the throttle. (3) Sand - this will be lighted as an indication that the sanding switch is turned on. (4) Dynamic brake warning light - will come on when excessive dynamic brake currents are developed on one of the units in the consist.

The engineer's control stand is different on GE locomotives, though it houses similar controls for performing identical functions to those found on EMD's. Figs. 2.12 - 2.15 illustrate the major steps in the historical development of the GE control stand. On earlier GE locomotives two designs of the control stand were used. The principal difference between the two is in the function of the selector and reverse levers, as outlined below:

A three-lever control stand (Figs. 2.12 and 2.16) was used on all U25 and U28 units. The U30 units built before 1968 also use this design. The selector-lever has six positions, which are B, OFF, 1, 2, 3, and 4. The reverse-lever has three positions forward, neutral, and reverse as normal. The throttle lever has an idle position plus eight major and eight intermediate positions. Major positions are marked by number.

Fig. 2.12 Three-lever control stand was used on U25, U28, U30 GE locomotives

Intermediate positions are marked by a dot or one-half mark. Each numbered throttle position changes the engine speed. The intermediate (one-half mark) positions change the amount of excitation.

The two-lever control stand (Fig. 2.13 and 2.17) was used on all U23 and U33 units until 1970. It also is used on U30 units built between 1967 and 1970. The selector lever combines the functions of the selector and reverser. It has five positions, which are used to select direction of movement as well as type of operation (motoring or dynamic braking). The mid-position of the selector lever is OFF. The first position to the right is forward motoring; the second position is forward dynamic braking. The first position to the left is reverse motoring; the second position is reverse dynamic braking. The throttle lever has an idle position and eight power positions. Engineers found the combined selector and reverse lever very undesirable.

As a step in standardizing locomotive controls pending completion of the AAR standardization work on locomotive controls, GE used EMD's controller unit (Figure 2.14) on locomotives built in 1971 and some locomotives built early in 1972. A further stage of standardization is planned by GE with the introduction of a domestic standard console during the summer of 1972. GE has built a prototype console and is prepared to go into full production as soon as the air brake gage arrangement details are resolved. This new standard, shown in Fig. 2.15, has been developed on the basis of recommendations set by AAR (Report of Committee on Electrical Equipment-Rolling Stock, Docket No. EE-30):

> "A. Throttle Handle. This handle will perform the function of controlling the power output of the locomotive. This handle will have an idle position and operating detent positions 1 through 8. This handle will be the longest of the three and will be a flat horizontal oval shape. Movement toward the engineer will increase power.

Fig. 2.13 Two-lever control stand was used on U23, U33 GE locomotives

Fig. 2.14 GE control stands were equipped with EMD controllers in 1971

B. Braking Handle. This handle will perform the dynamic braking function. The handle will have an off position, minimum brake position which will set up dynamic braking, and then free movement toward a maximum brake position. Between minimum brake and maximum brake there will be notchless modulation of the amount of braking. The shape of this handle will be a flat vertical oval that will match the flat palm of the hand when pushing away to increase braking.

C. Reverser Handle. This handle will determine the locomotive direction. There will be three definite positions -- forward, off, and reverse. Shape will be round."

Interlocking of the controller will be as follows to provide the maximum safety:

1. The brake handle must be in the "off" position before the throttle handle can be moved out of the "idle" position.
2. The throttle handle must be in "idle" and the reverser handle in "forward" or "reverse" before the brake handle can be moved.
3. The reverser handle must be inserted before the throttle handle may be moved out of "idle".
4. The reverser handle may only be moved into "forward" or "reverse" with the throttle in the "idle" position and the brake in "off".
5. The reverser handle may not be moved out of "forward" or "reverse" with either the throttle handle or brake handle in either a power or braking position.
6. When the reverser handle is removed, neither the throttle handle nor the brake handle may be moved out of the "idle" or brake "off" position respectively.

Principal Features of the Standard Control Stand

1. Three handles, 'each performing a separate function
2. The throttle is to perform only the power function, removing any question as to the operating mode of the locomotive.
3. The dynamic brake lever operates in the opposite direction and serves only to control dynamic braking.
4. Reverser handles will all be standard, making them interchangeable regardless of manufacturer of locomotive.

5. Dual reading ammeters for power and dynamic braking are to be standard on the recommended control stand.

6. All gauges are to be the large 4 1/2 inch size with back lighting for maximum visibility.

The AAR standard as outlined above has interlocking features similar to the EMD and GE models already in use. It does not have position indicator windows because it shows lever positions directly on the handle housing instead, which is a desirable feature. The standard recommendations discuss indicator gauges, but do not extend to include optimal design of switches, push buttons, and indicator lights. It would be also advantageous to recommend standardized location of all the above components on a future standard console. Location of the various components must be determined by grouping functionally dependent controls for ease of operation.

On the new standard, as GE built it (Fig. 2.15), all dial indicators are circular with the zero setting at about the 8 o'clock position. The load current indicator is mounted slightly lower than the pressure gauges. However, all dials should be aligned. Furthermore, the current indicator has square housing which does not affect its human factors value because its face is round corresponding to the other gauges, but lowers aesthetic appeal of the whole design. From the human factors point of view, it is more desirable to have the operating normal position of all dial pointers uniformly at the 9 o'clock location. Such a change would require minor modification of the instruments only.

The load meter of GE locomotives is slightly different from EMD's. It is graduated in 100 ampere increments. The continuous motoring zone

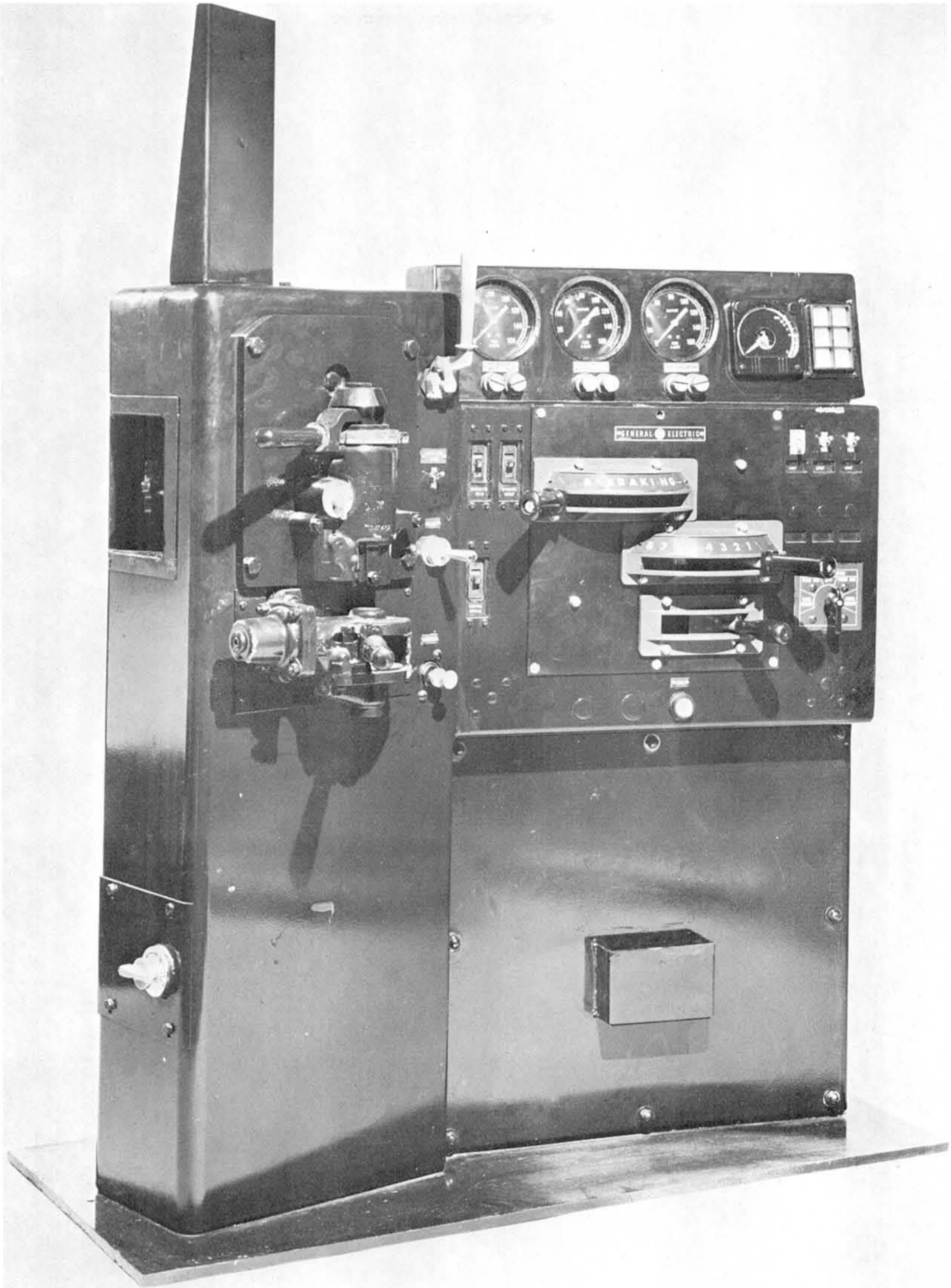

Fig. 2.15 AAR standard control stand built by GE to be introduced in 1972

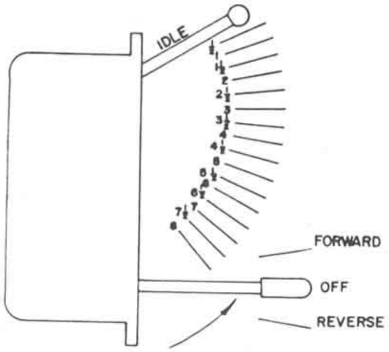

Fig. 2.16 Throttle and reverse level positions on a three-lever GE control stand

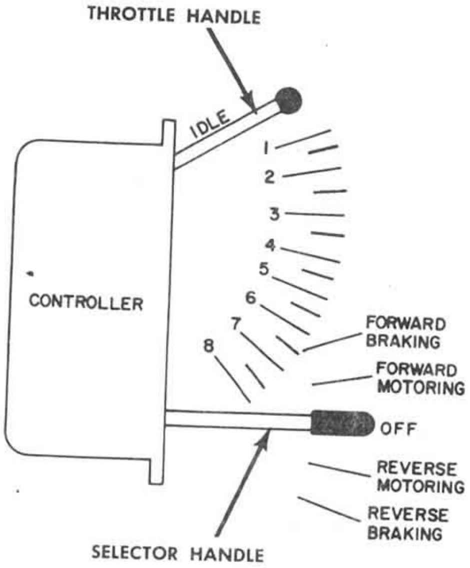

Fig. 2.17 Throttle and combined selector and reverse lever positions on a two-level GE control stand

is yellow. Numerals located between the 100 ampere graduations in the yellow zone indicate the time, in minutes, that the different short-time zones can be used.

The control stand used by the third major manufacturer, ALCO, is shown in Figs. 2.18a and 2.19. The selector lever has six positions, which are D, OFF, 1, 2, 3, and 4. The selector lever on the controlling unit must be in No. 1 position for motoring, D position for dynamic braking, and OFF position when locomotive is parked. Positions 2, 3, and 4 are used to control trailing units equipped with manual transition. The position of the selector lever is indicated in an illuminated window. The reverse lever has three positions -- forward, neutral, and reverse. The position of the reverse lever on the controlling unit controls the direction of movement. The throttle lever has an idle position, marked "0", and eight power positions. ALCO and the other two manufacturers offered an additional Manual Power Reduction as an option device to provide a means of manually controlling main generator excitation which, in turn, controls the power output of the unit without affecting other units in the consist. The device can be used to reduce power when the unit is slipping excessively. The device is operated by moving a rheostat (located under the reverse lever) from the OFF position clockwise into the reduced power zone. When in this zone, a Lead Unit Power Reduction Light will be on. The load meter on ALCO is identical to the GE model. Figs. 2.26 - 2.30 present an overview of various ALCO control stands.

Canadian National Railways has developed a control stand for their

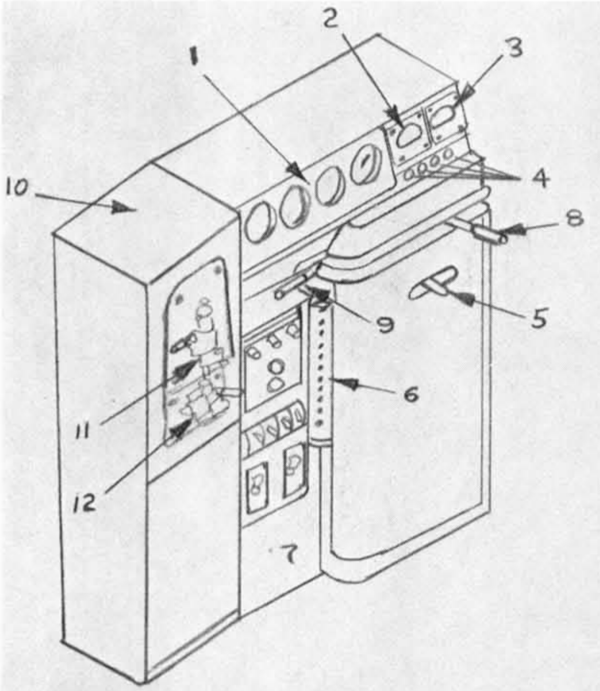

1. Gauge Board
2. Loadmeter
3. Speed Recorder
4. Dial Lights
5. Reverser Handle
6. Switch Board
7. Switch Board-Fuel Pump Generator Field, Control Circuit Breakers
8. Throttle Handle
9. Selector Handle
10. Brake Stand
11. Automatic Brake Valve
12. Independent Brake Valve

Fig. 2.18a Control Stand Arrangement-ALCO E1662

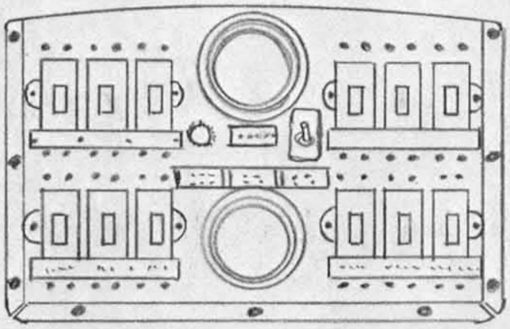

Fig. 2.18b Circuit Breaker Panel on Rear Wall of Cab - ALCO E1662

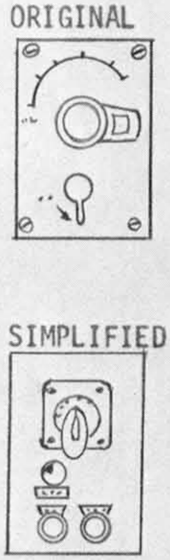

Control Panel

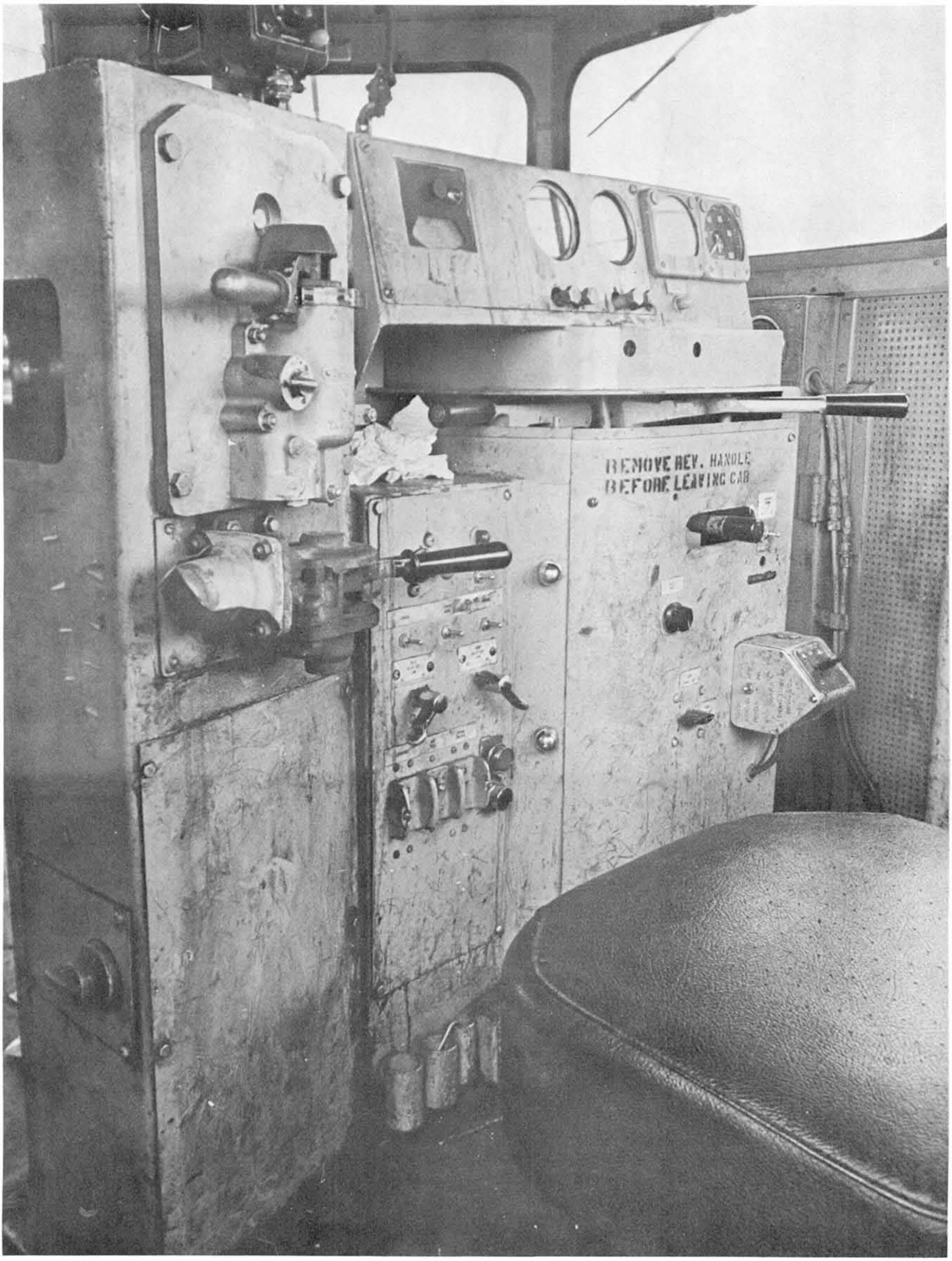

Fig. 2.19 Late model ALCO control stand (C630, 1966 production) See also Figs. 2.26 and 2.27

use as a future standard. Only a schematic drawing was available (Fig. 2.20). The drawing illustrates that the AAR controller was adopted by CNR. The control stand contains more dial gauges than usual. An airflow meter and a cylinder-brake-pipe pressure gauge are added. Diameter of the circular dial faces is 4 1/2" uniformly except for the air flow gauge which has a square window. Switches, push buttons and indicator lights seem to be grouped functionally. For example, engine run switch, fuel pump switch, and generator field switch are located next to each other or light switches and dimmer control are placed in a row. Canadian National has issued orders for locomotives specifying the new cab design.

Fig. 2.21 shows a modification of GE's earlier three-lever control stand installed in a U25 locomotive. On this version the air horn is operated by pulling a chain with the right hand, the speedometer is different from that shown in Fig. 2.12, and there is some modification in the arrangement of switches. Some typical modification of the two lever GE control stand are shown in Fig. 2.22 vs Fig. 2.13. There are three pressure gauges on this stand, light switches, and indicator lights are added, the position of front headlight switch has been moved to the right side from the left. In another modification of the two-lever console, Fig. 2.23, the speedometer is built into the control stand, brake pressure gauges are located below the load meter and speedometer, the selector-reverser handle has a unique shape as a combination of discs

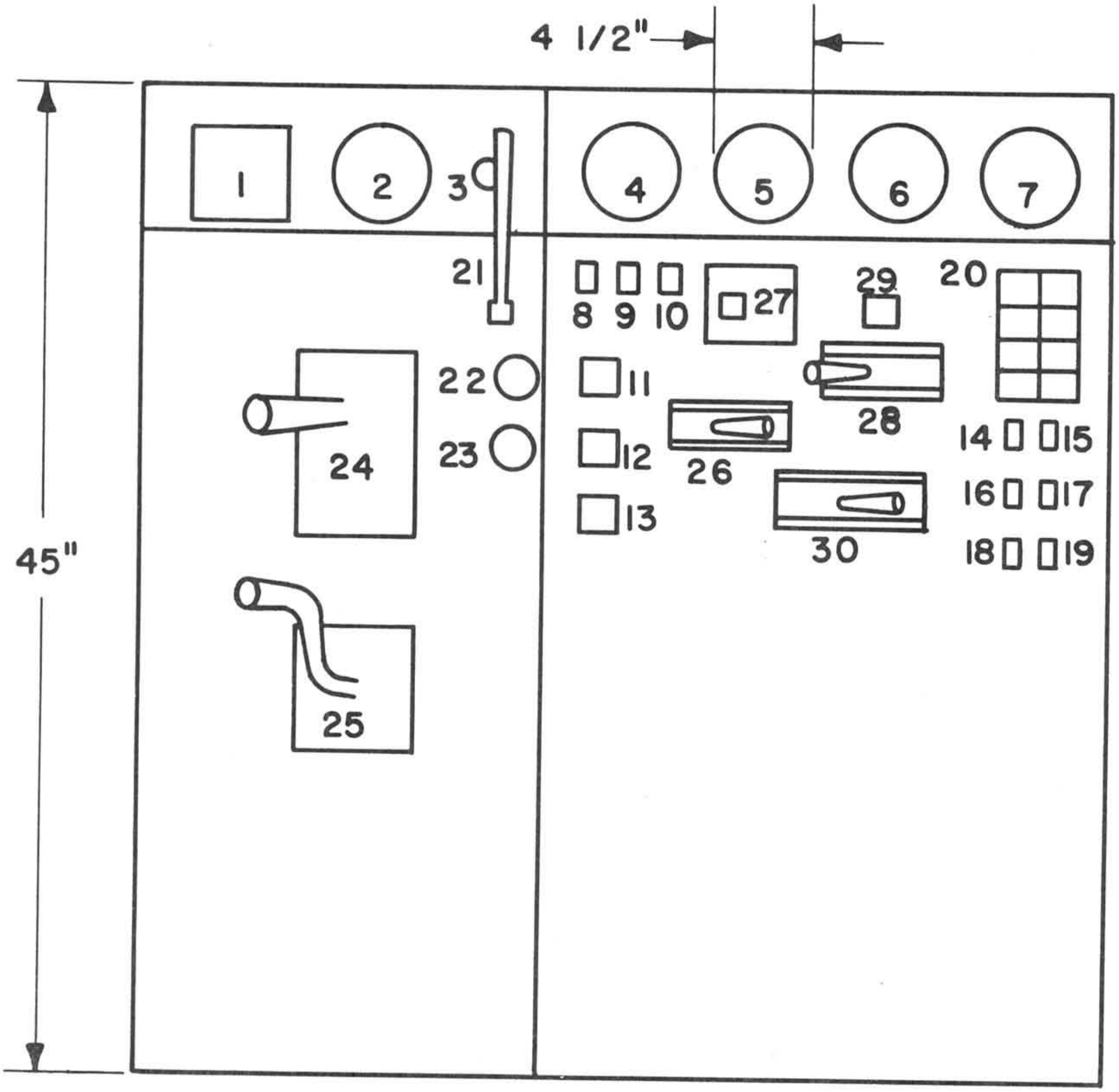

1/ Air Flow Meter
2/ Cyl. & Brake Pipe
3/ Gauge Light Dimmer
4/ Main & Equal Res
5/ Appl. & Signal Pipe
6/ Speedometer
7/ Load Meter
8/ Eng. Running Sw.
9/ Fuel Pump
10/ Gen. Field Sw.
11/ Headlight Dimmer Control
12/ Front Light Sw.
13/ Rear Light Sw.
14/ Panel Light Sw.
15/ Ground Light Sw.
16/ Dynamic Brake Sw.
17/ Defroster Sw.
18/ Ground Reset
19/ Assistant Call
20/ Warning Light Indicators
21/ Horn
22/ Bell
23/ Sander
24/ Train Brake
25/ Ind. Brake
26/ Throttle
27/ Throttle Pos. Indicator
28/ Selector Handle
29/ Mode Indicator
30/ Reverser

Fig. 2.20 Proposed standard control stand of the Canadian National Railways

Fig. 2.21 Modification of the three lever GE control stand

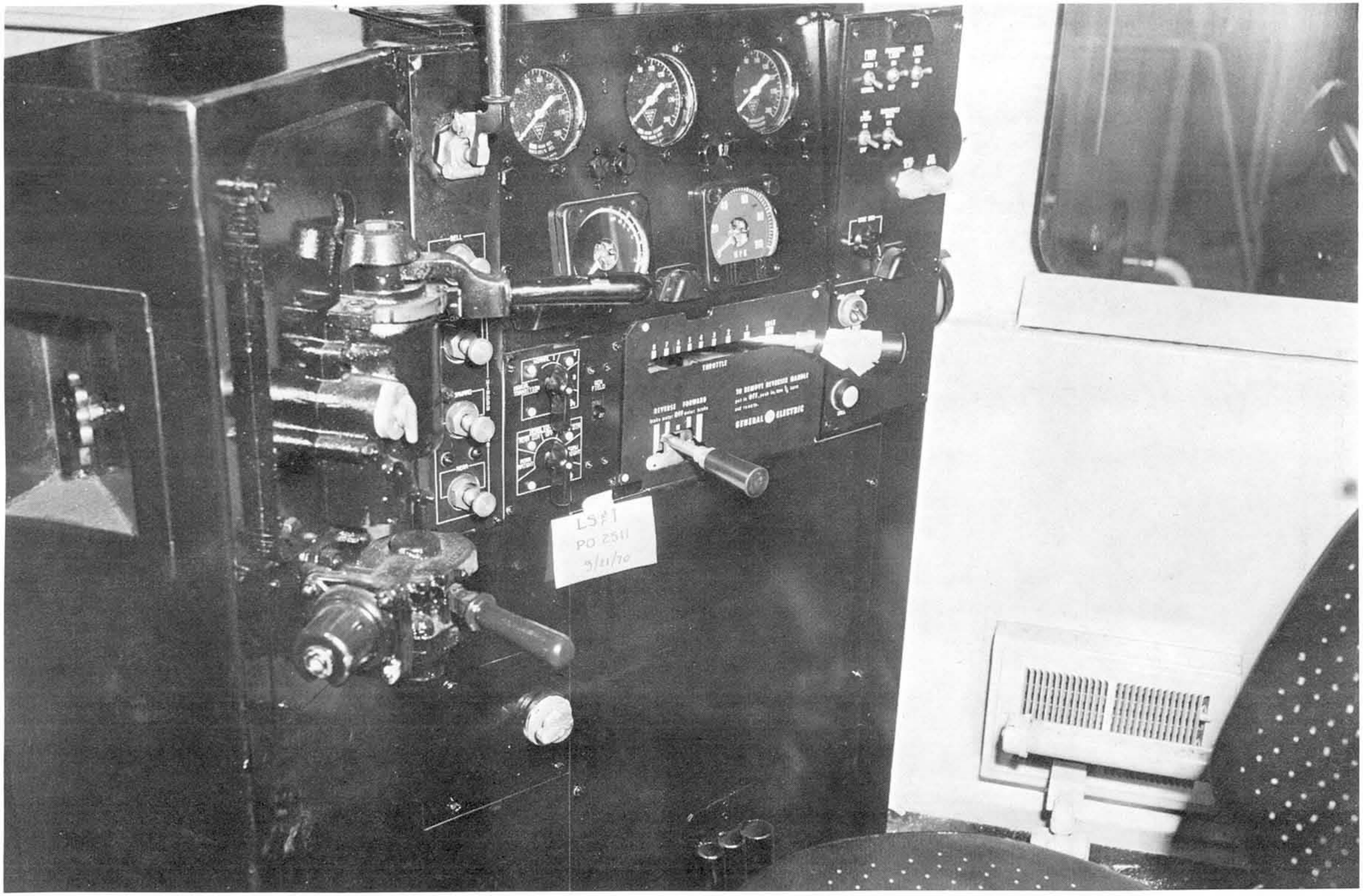

Fig. 2.22 Modification of the two lever GE control stand (U23 model, Lake Superior & Ishpeming Railroad)

Fig. 2.23 Modification of the two level GE control stand (U23 model, Lake Superior & Ishpeming Railroad)

and a sphere, and the position of switches and indicator lights is different from any other model (Fig. 2.13 or 2.22).

The standard GE sander switch used on older locomotives, located on the right side wall, in front of the engineer, is illustrated in Fig. 2.24. Sharp edges, and protrusion of the device call for a smooth design, maybe lowered, partially at least, into the cab wall. A niche is provided for folding back the arm rest of the sliding window next to the sander switch. Extending the niche further could house the switch, or as another solution, just the activating lever could be above the surface of the cab wall. Design of the sander switch on EMD locomotives is shown in Fig. 2.25.

Figs. 2.26-2.30 illustrate variations found on different ALCO locomotives. The basic ALCO control stand in Fig. 2.26 shows that three indicator gauges are mounted on the front wall. The indicators are partially obstructed by the control stand in the engineer's field of view. A close-up view of the three instruments in Fig. 2.27 indicates neither the gauges nor their functions are marked with labels. In the DL560, Fig. 2.28a, the control console is located parallel to the train axis. Fig. 2.29a shows a conventional ALCO control stand without the deadman pedal and one version of the circuit breaker panel. The controller unit on the Model DL500C, Fig. 2.30a, is to the left of the engineer as usual, but the

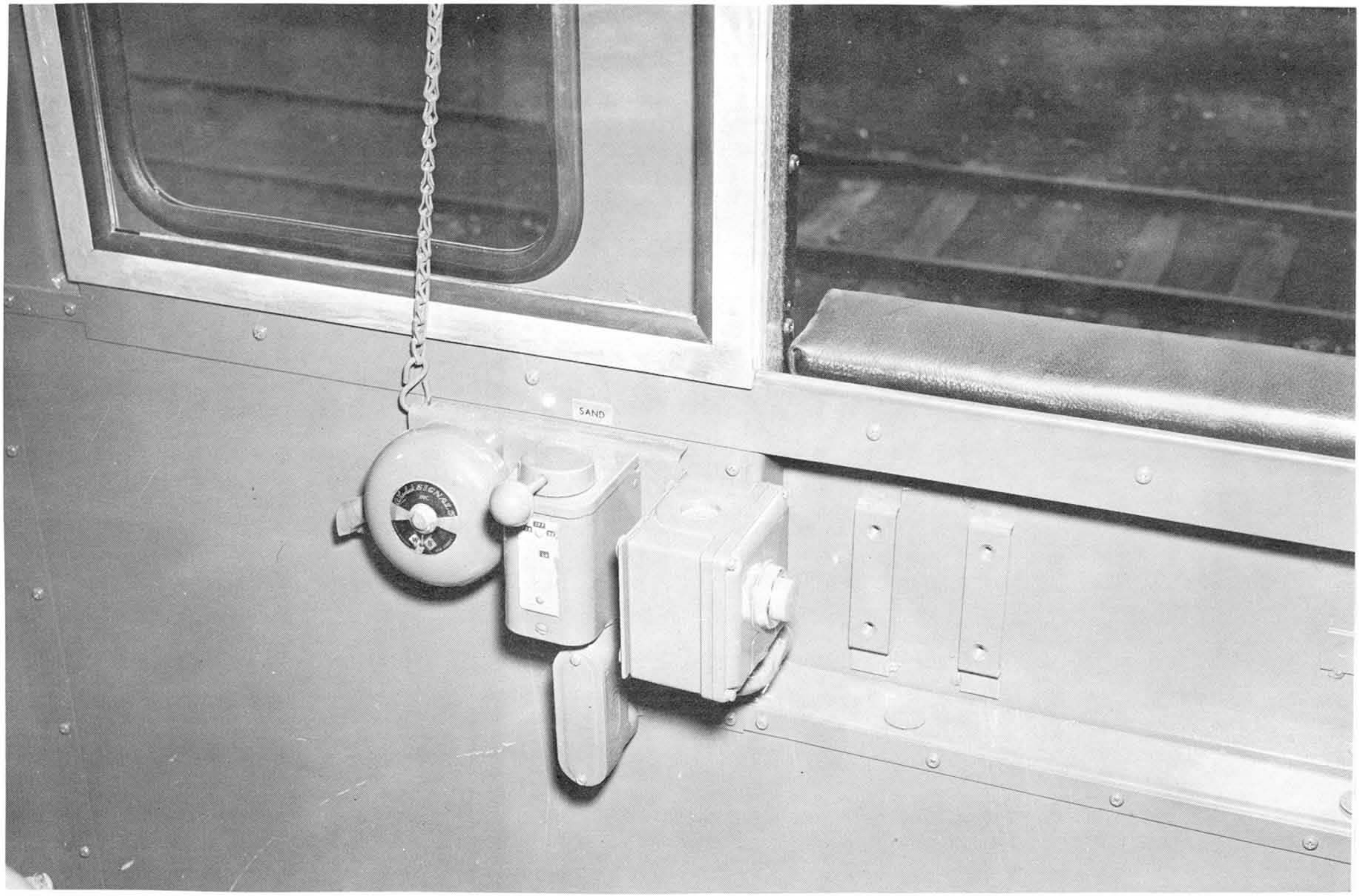

Fig. 2.24 Sander switch on GE locomotives

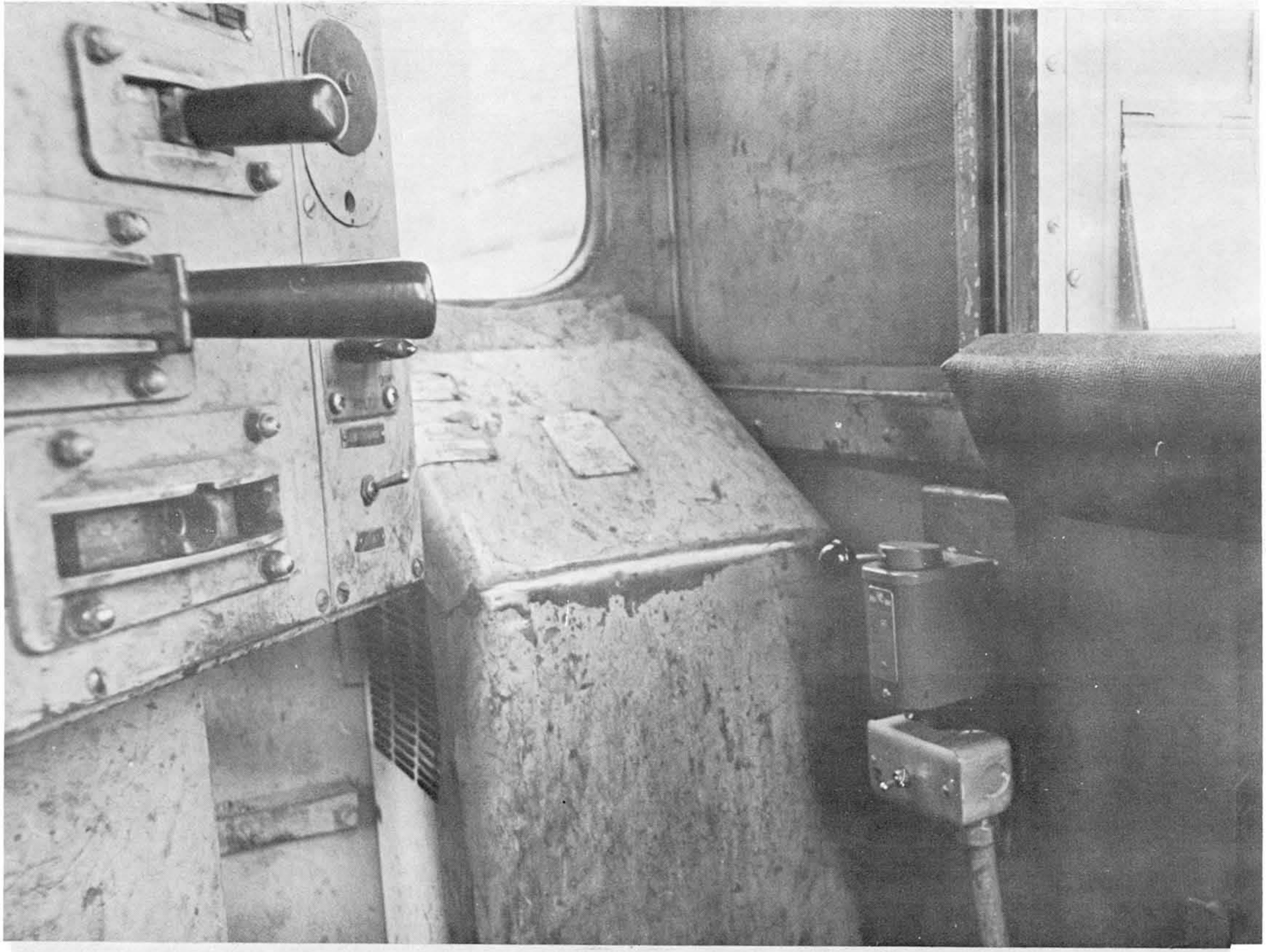

Fig. 2.25 Sander switch on EMD locomotives (SD40, 1970 model) Note wear on heater, where engineer rests his feet.

Fig. 2.26 Late model ALCO control stand (C630, 1966 production) Note indicator gauges behind control stand on front wall.

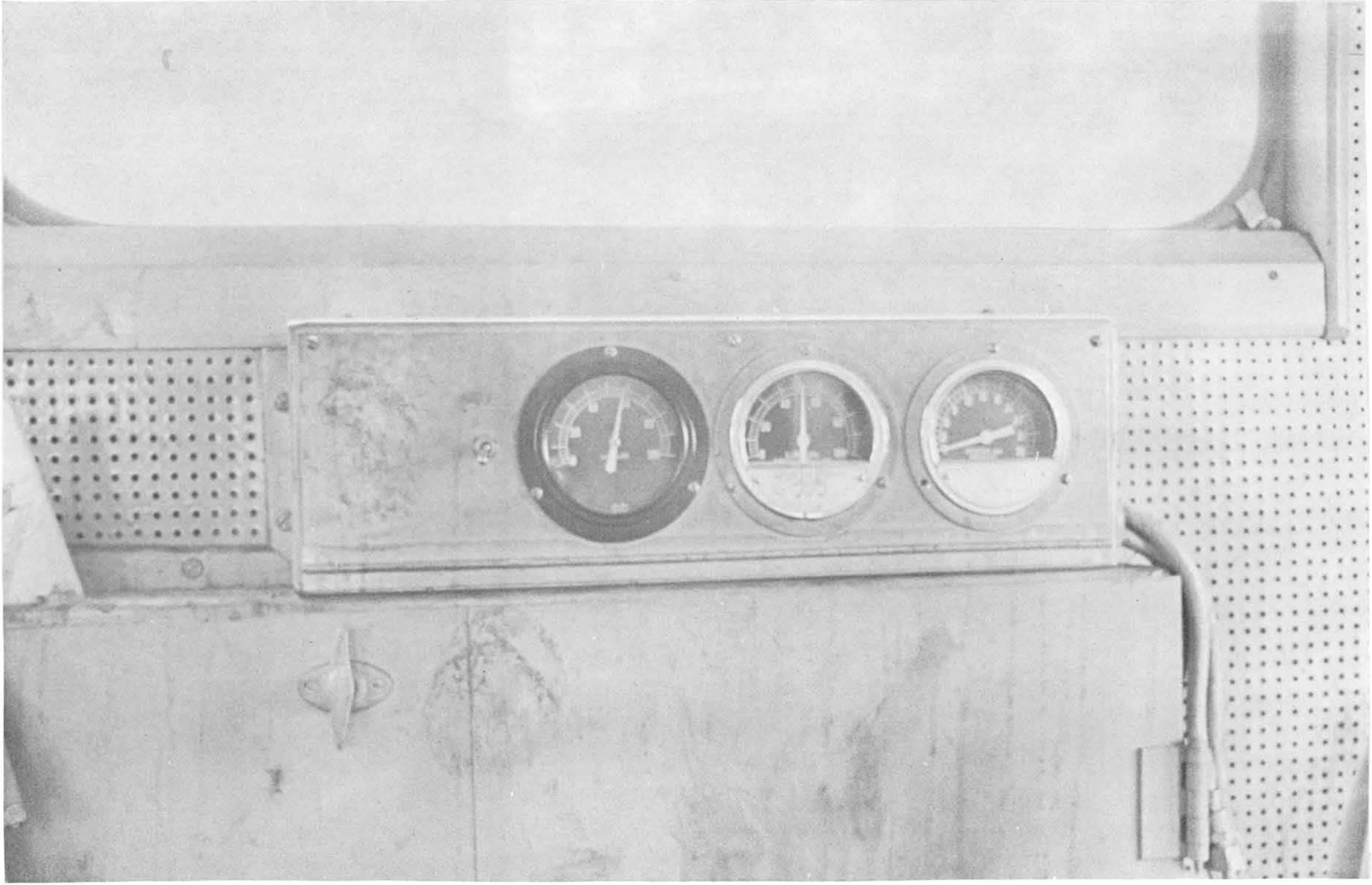

Fig. 2.27 Indicator gauges on front wall of late model ALCO locomotive (C630, 1966 production) Note that the instruments and their functions are not identified.

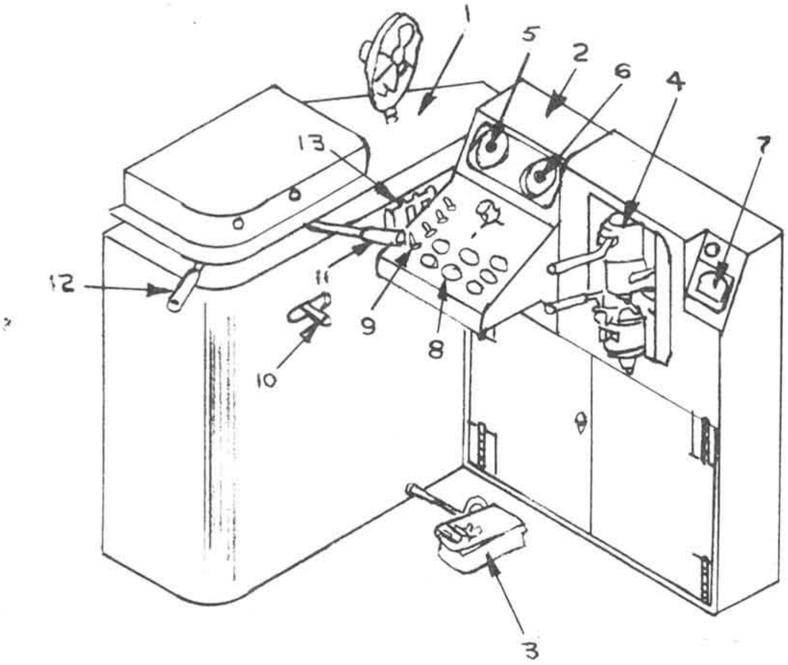

1. Engineman's Control Stand
2. Gauge Panel
3. Foot Switch
4. Brake Valves
5. Lube Oil and Fuel Oil Pressure Gauge
6. Engine Temperature Gauge
7. Loadmeter
8. Gauge Light Rheostat Switches
9. Light Switches
10. Reverser
11. Throttle
12. Selector
13. Fuel Pump and Exciter Circuit Breakers

Fig. 2.28a Control Stand Arrangement - ALCO DL500C

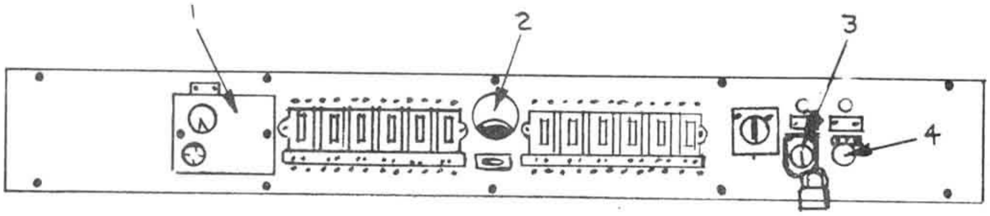

1. Ground Relay Inolcator and Reset
2. Auxiliary Generator Charge Meter
3. Reset and Start Fuel Pump-Start Engine
4. Emergency Fuel Cut-Off and Start

Fig. 2.28b Circuit Breaker Panel (Rear Wall of Cab) - ALCO DL500C

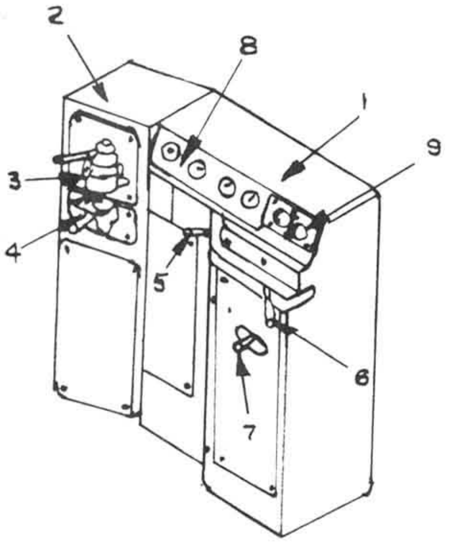

1. Control Stand
   Circuit Breakers for the Fuel Pump, Control System, Generator Field. Engine Control Switch and Start Button.
2. Brake Stand
3. Automatic Brake Valve
4. Independent Brake Valve
5. Selector Handle
6. Throttle Handle
7. Reverser Handle
8. Gauge Board
9. Load Meter

Fig. 2.29a Control Stand Arrangement - ALCO DL535

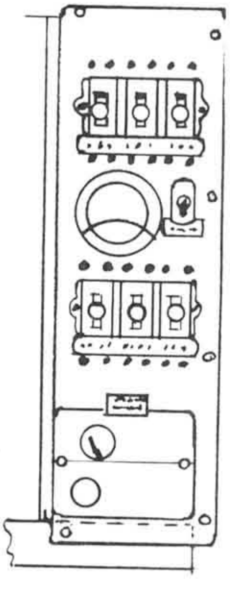

Fig. 2.29b Circuit Breaker Panel (Rear Wall of Cab) - ALCO DL535

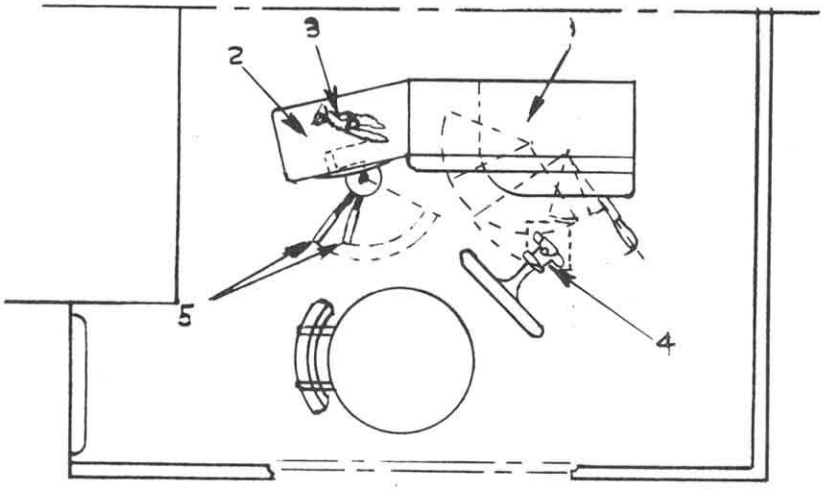

1. Control Stand
2. Brake Stand
3. Control Air Valve
4. Foot Valve
5. Valve Handles

Fig. 2.30a Control Stand - ALCO DL560

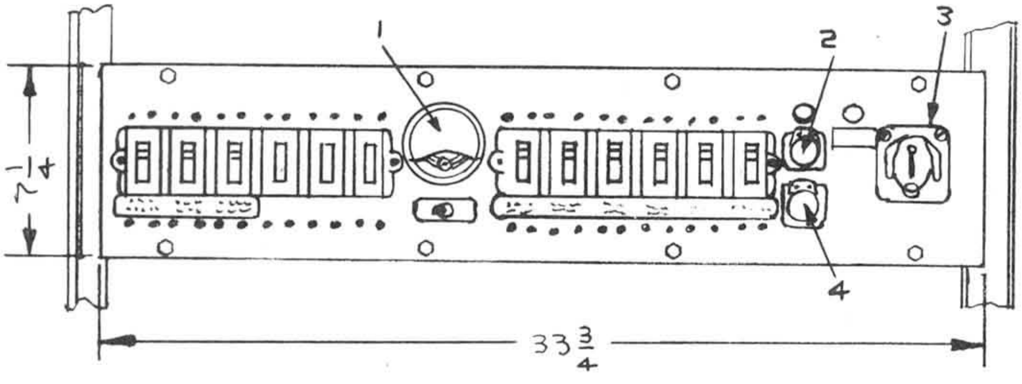

1. Battery Charge Meter
2. Engine Start Button
3. Engine Control Switch
4. Engine Stop Button

Fig. 2.30b Circuit Breaker Panel- ALCO DL560 instrument panel and the brakes are located in front of him, perpendicular to the locomotive axis. The engineer operates the brakes with his right hand on this locomotive contrary to other conventional models.

The control stand of a new (1971 production) EMD switcher SW1500 is shown in Figs. 2.31 and 2.32. The control stand is located in the middle of the cab floor with sides parallel to the cab walls. The crew can walk around the control stand, the seats are mounted on the cab walls. The control panel, shown in the background of both figures, is located in the wall on the hood side of the cab. The deadman pedal extends full length along the control stand, shown in Fig. 2.32, thus the engineer is capable of operating it from any location in the cab. The cab heater, Fig. 2.32, is built into the control stand on switchers, and it is not a separate unit as on general purpose locomotives. Such an arrangement provides more adequate passageway for the crew around the control stand.

The control stand of an old (1943 production) EMD switcher S-90 is shown in Fig. 2.33. These switcher locomotives were found still in good condition and in 24-hour service in the yards of the Louisville and Nashville Railroad.

The engineer of a recent production (1970) SD-40 found the horn handle uncomfortable and hard to identify and wrapped a rag around it, as shown in Fig. 2.34.

Examples of old switcher control stands are shown in Figs. 2.35 - 2.38. In 1955 features of the later basic ALCO control stand were appearing, as shown on an RS-3 switcher (Fig. 2.35). The control stand

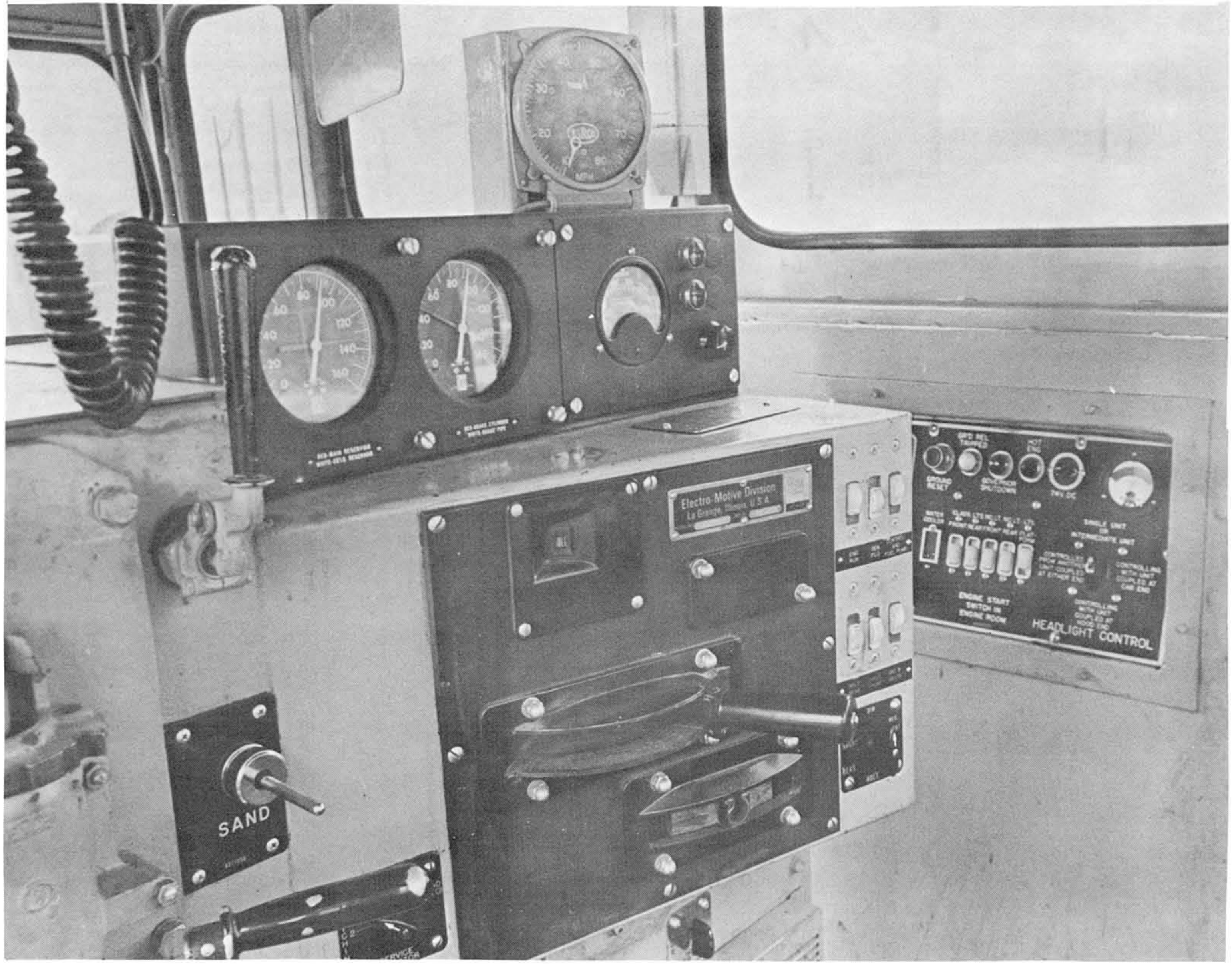

Fig. 2.31 Control stand and control panel in SW1500 switcher (1971 production). See also Fig. 2.32

Fig. 2.32 Cab interior on switcher SW1500 (1971 Production) showing lower half of control stand with the dead-man pedal and cab heater.

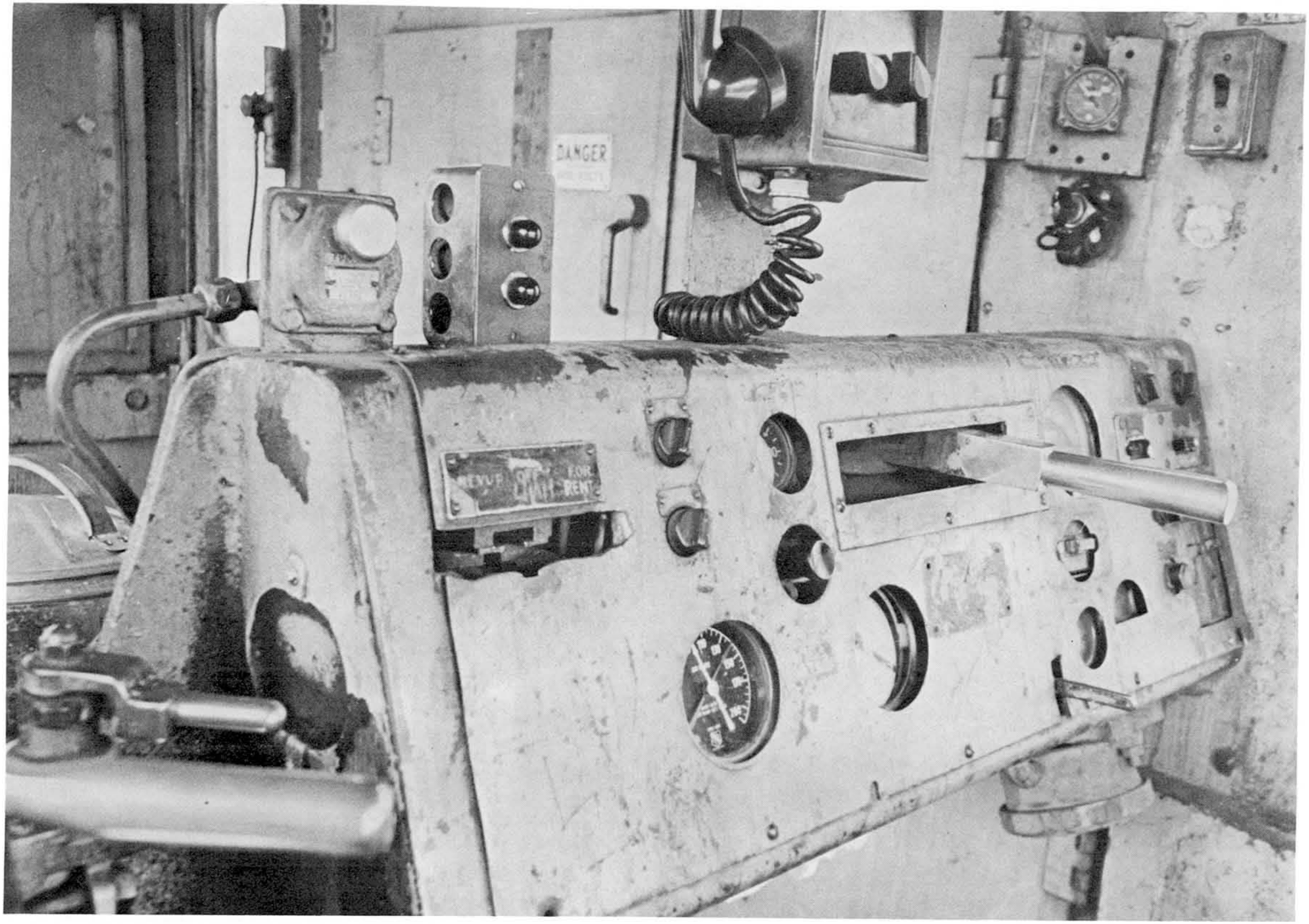

Fig. 2.33 Control stand in an EMD S-90 switcher, manufactured in 1943 but still in operation

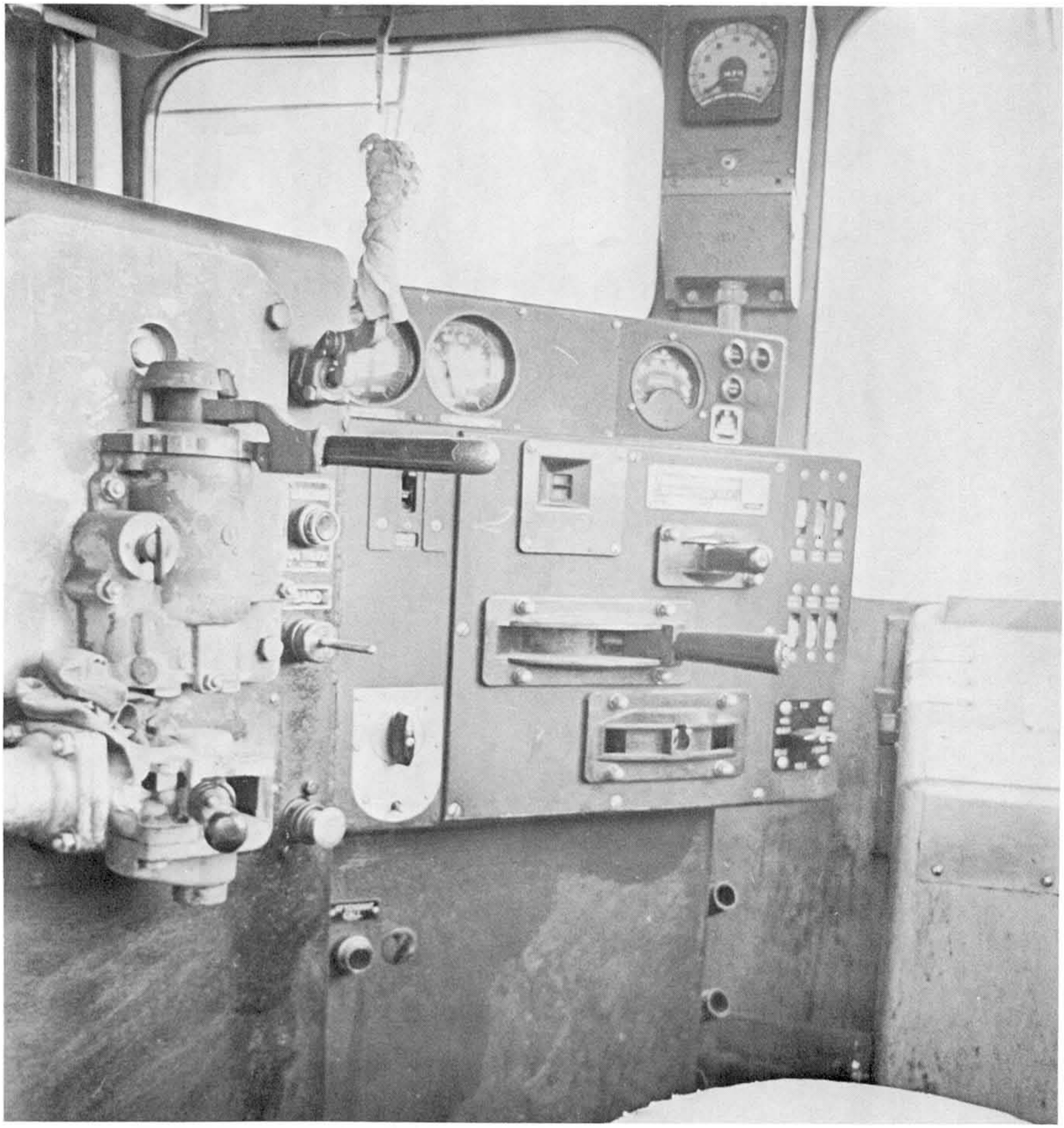

Fig. 2.34 The engineer of this recent production (1970) SD-40 locomotive wrapped a rag around the handle of the horn for ease of identification

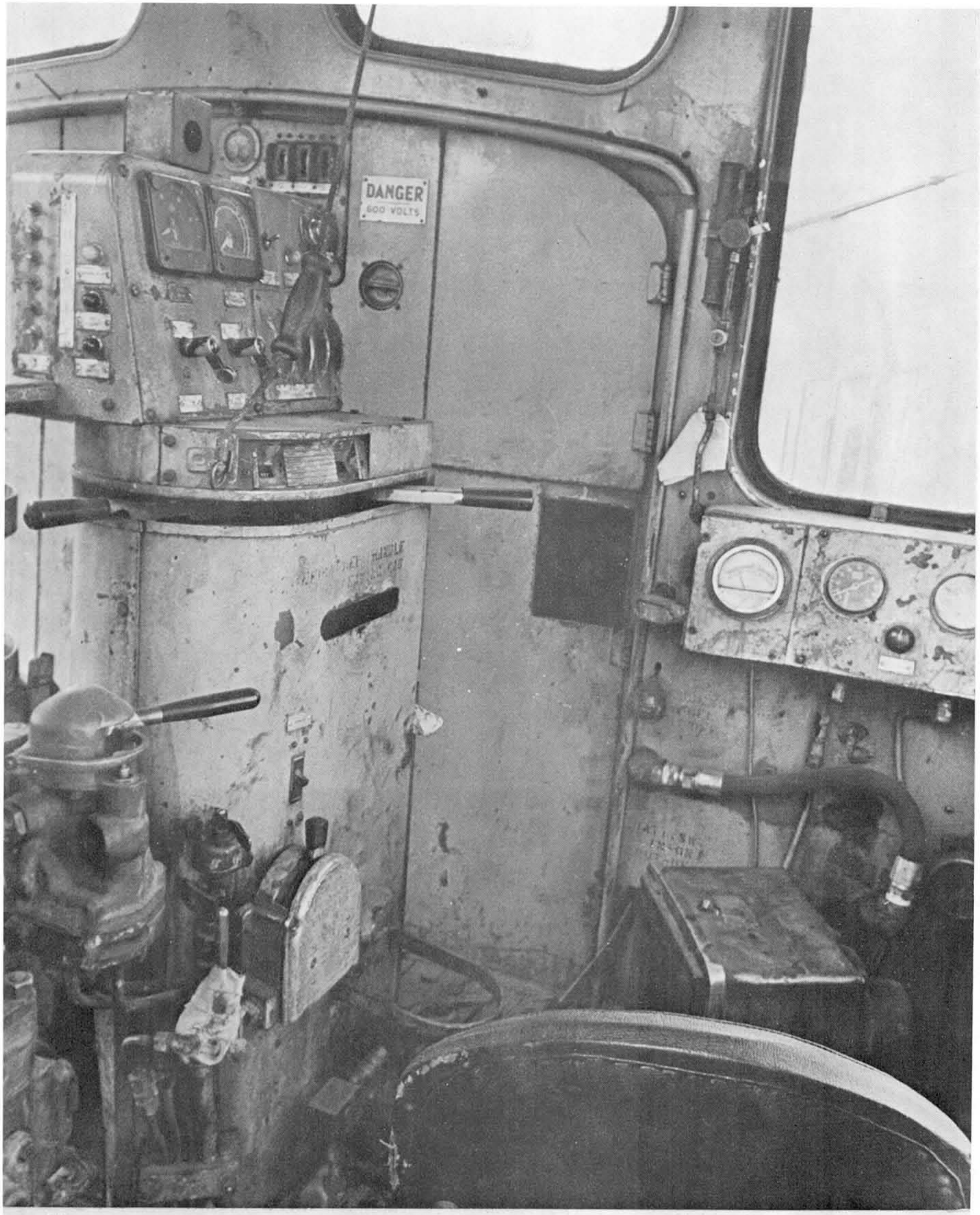

Fig. 2.35 Control stand in RS-3 ALCO switcher (1955 production)

of a somewhat earlier S-2 ALCO switcher was completely different, Fig. 2.36, with the brakes located to the right. An old S-12 Baldwin Switcher, manufactured in 1953, has two-lever controller (Fig. 2.37) and a separate brake system stand (Fig. 2.38). The cab on this switcher is located at one end of the locomotive without a short hood. The control panel is mounted on the long hood wall of the cab as shown in the background in Fig. 21.

The engine control panel is generally located at the upper left hand corner of the electrical cabinet that forms the rear wall of the cab. This panel contains various (1) control switches, (2) push buttons, (3) control gauges, and (4) indicator lights. All these controls are not routinely used during normal operation. In contrast to the functional uniformity found among various control stands, control panels on locomotives made by different manufacturers vary greatly. Table 2.1 summarizes the most important operational functions displayed on the engine control panel. The table shows the respective differences found between various makes of locomotives, and also reveals that identical functions are marked differently. For example, a green indicator light means low water level on GE locomotives but low oil level on ALCO models. Yellow light could mean the incidence of low oil pressure, low water level or crankcase pressure separately or all together without any distinction on EMD iocomotives, while GE has separate lights to indicate these functions and an additional lube oil pressure gauge.

A typical control panel of EMD locomotives is shown in Fig. 2.39 Separate circuit breaker and fuse panels are located directly below the engine control panel. The circuit breaker panel is divided into

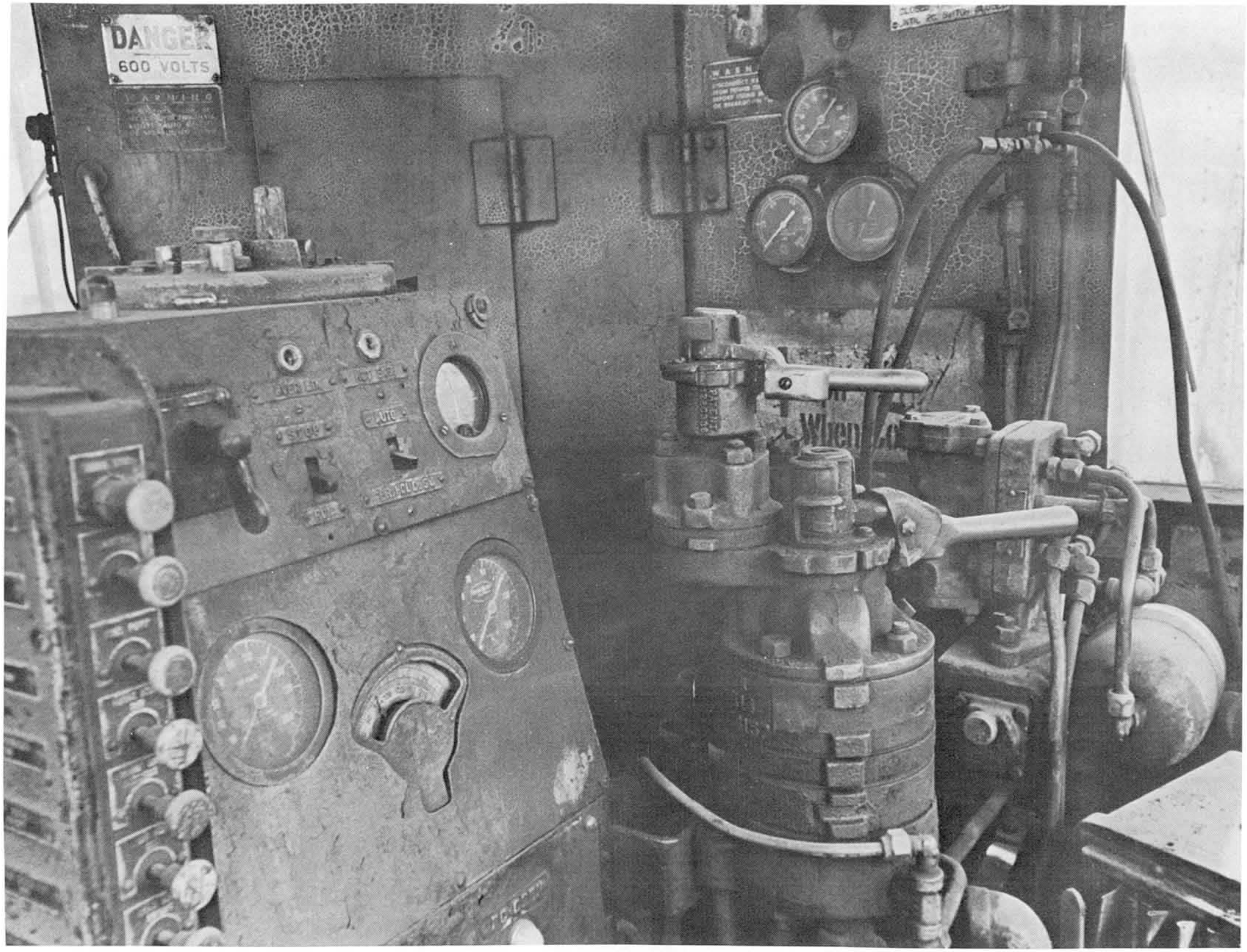

Fig. 2.36 Control stand in S-2 ALCO switcher (1950 production)

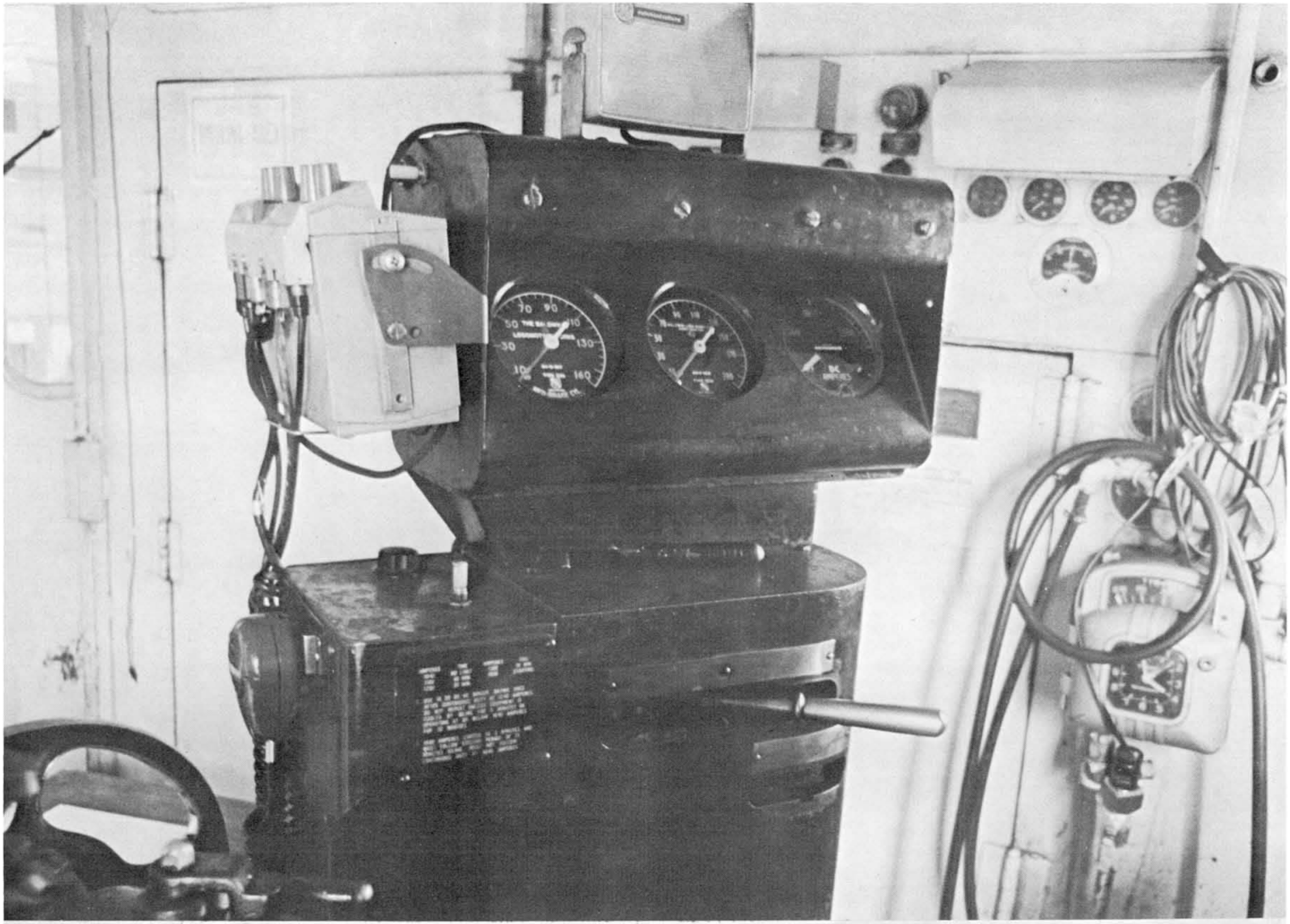

Fig. 2.37 Control stand of an S-2 Baldwin switcher (1953 production) with the control panel on the hood wall, shown in the background

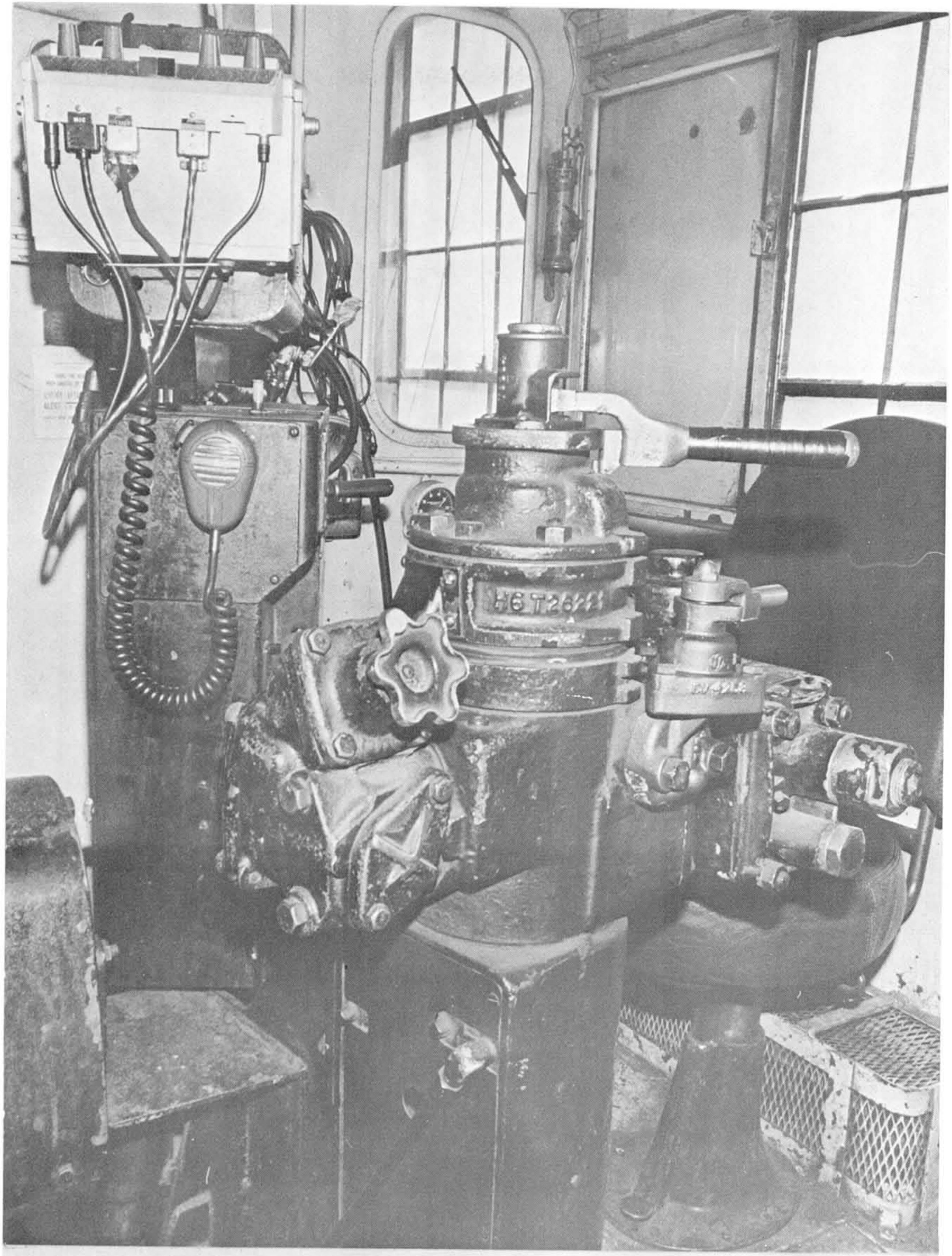

Fig. 2.38 Brake stand in an S-2 Baldwin switcher (1953 production)

TABLE 2.1

CONTROL PANEL EQUIPMENT

	EMD	GE	ALCO
SWITCHES:			
Engine Start	+	Combined Two-Position Switch	Combined Two-Position Switch
Engine Run	GP 30 only		
Dynamic Brake Set-Up	+	+	+
Dynamic Brake Cut-Out	Optional		
Unit Selector	Optional		
Emergency Fuel Cut-Out	+	+	+
Lights On-Off	+	+	t
Traction Motor Cut-Out	Optional	Optional	Optional
Isolation	+		
Main Battery	+	+	+
PUSH BUTTONS:			
Engine Start		+	t
Engine Stop		+	t
Ground Relay Reset	+	+	+
Fuel Pump Reset		+	
Airfilter Reset		+	
GAUGES:			
Lube Press		t	
Fuel Press		t	
Intake Air Pressure		+	
Battery Charger	+	Optional	Optional
INDICATOR LIGHTS:			
Battery Charge		Blue	Blue
Low Oil Pressure		Yellow	Green
Crankcase Pressure	Yellow	Yellow	Yellow
Low Water		Green	
Hot Engine	Red	Red	Red
Ground Relay Tipped	White	White	White
Air Filter	White (Optional)	White (Optional)	
Excitation Limit	Green		
Turbo Charger Aux. Pump	White		
No Power	Blue		

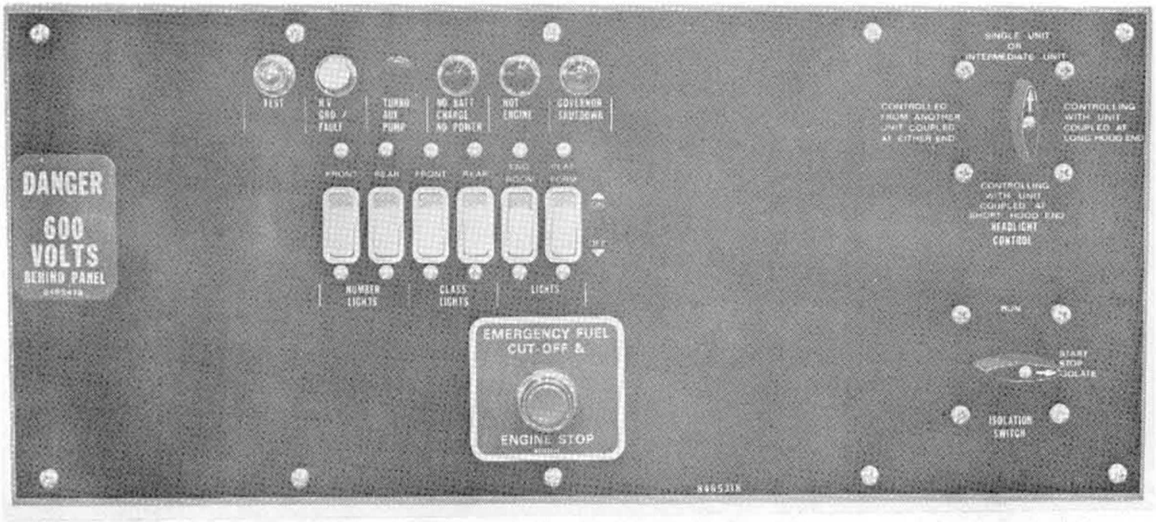

Fig. 2.39 Basic control panel on EMD locomotives

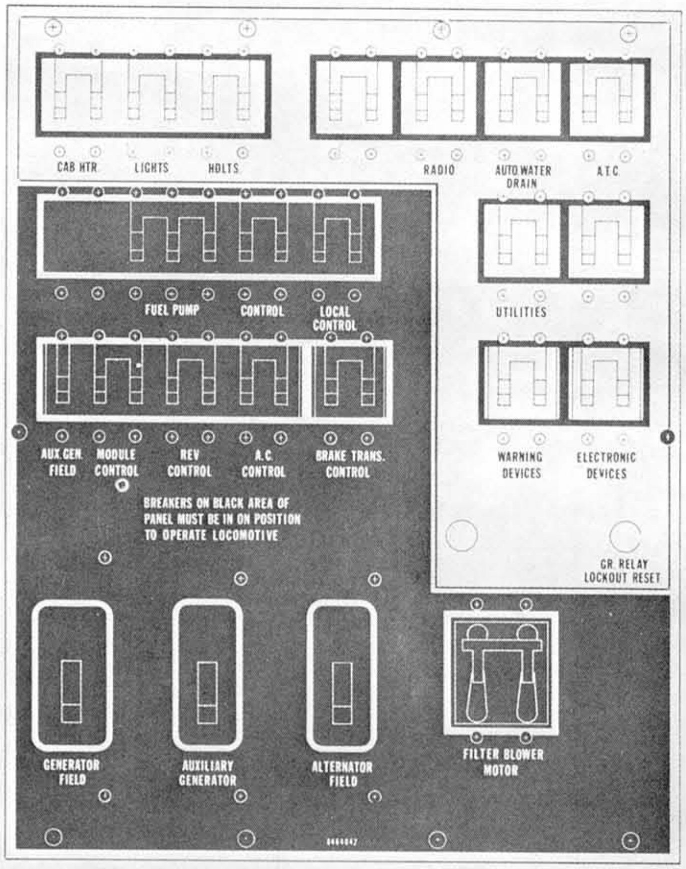

Fig. 2.40 Circuit breaker panel on EMD locomotives

two sections, one containing those circuit breakers that must be in the ON position to operate the locomotive, and a second section containing breakers for lights and miscellaneous devices that are used intermittently only as conditions require. The two sections are separately located on the panel, and as a further feature, two different backgrounds are being used: black field for the ON circuit brakers, white field for the intermittent circuit breakers (Fig. 2.40)

The engine control panel on GE locomotives is of different design, as shown in Fig. 2.41. The GE panel does not have separate circuit breaker and fuse units. A typical ALCO control panel is shown in Figs. 2.42 and 2.43 while different ALCO versions can be seen in Figs. 2.18, 2.28-2.30. A variation of the GE panel is shown in Fig. 2.44 where the relative position of the switches and gauges was reversed in a U25 cab. GE's electric locomotive, AEP, has an entirely different panel (Fig. 2.45). ALCO does not have separate circuit breaker or fuse panels either.

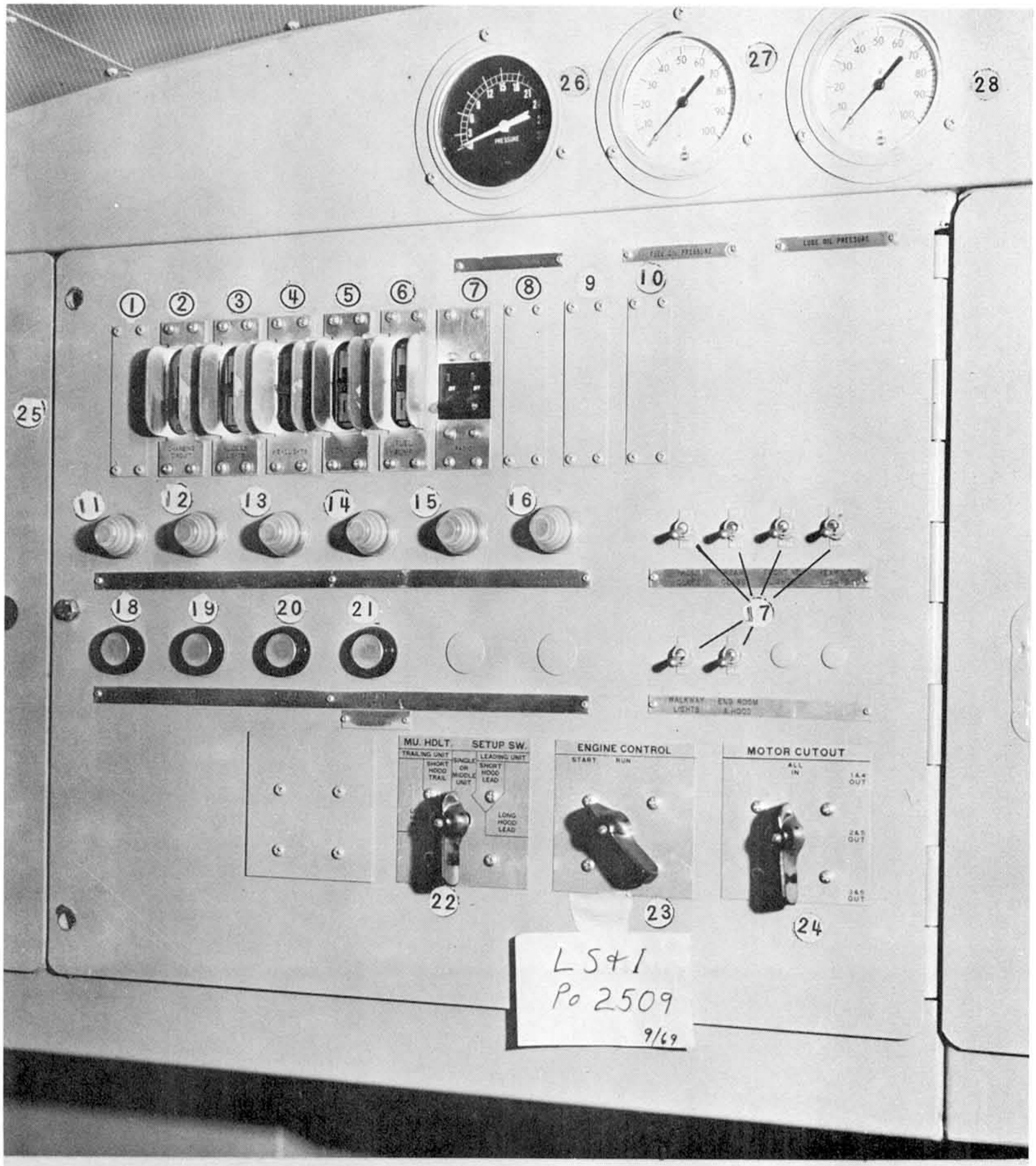

1 Engine run
2 Charging circuit
3 Running lights
4 Headlights
5 Control
6 Fuel pump
7 (Optional Equipment)
8 (Optional Equipment)
9 (Optional Equipment)
10 Slip suppression cutout

11 Ground relay trip
12 Hot engine
13 Low oil
14 No battery charge
15 Low water
16 (Optional Equipment)
17 Light switches
18 Ground reset
19 Fuel pump reset
20 Engine start

21 Engine stop
22 M.U. headlight set-up switch
23 Engine control switch
24 Motor Cut-out switch (optional)
25 Battery switch compartment
26 Turbo (intake manifold) air pressure
27 Fuel oil pressure
28 Lube oil pressure

Fig. 2.41 Basic control panel on GE locomotives

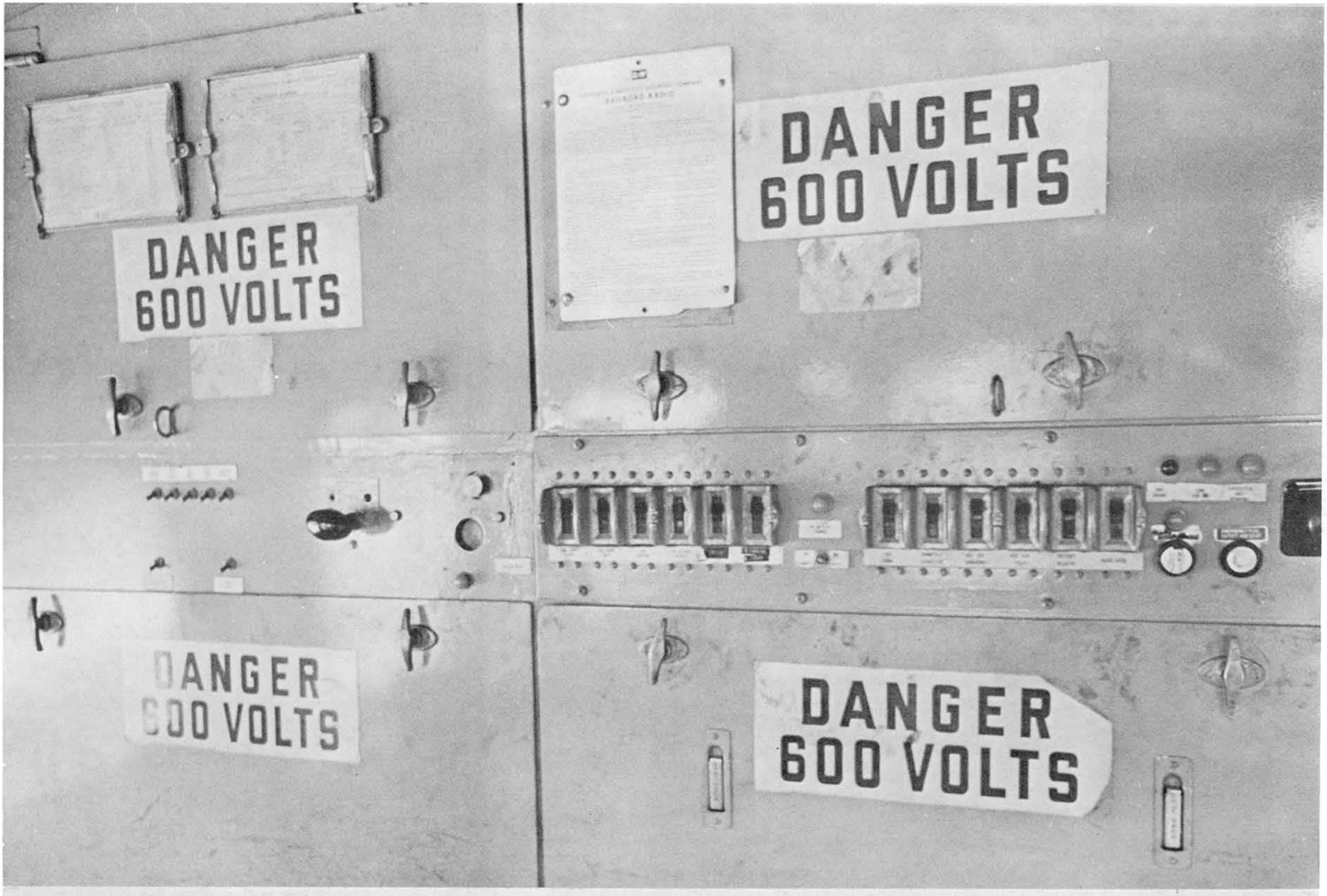

Fig. 2.42 Basic control panel on ALCO locomotives (see indexing in Fig. 2.43)

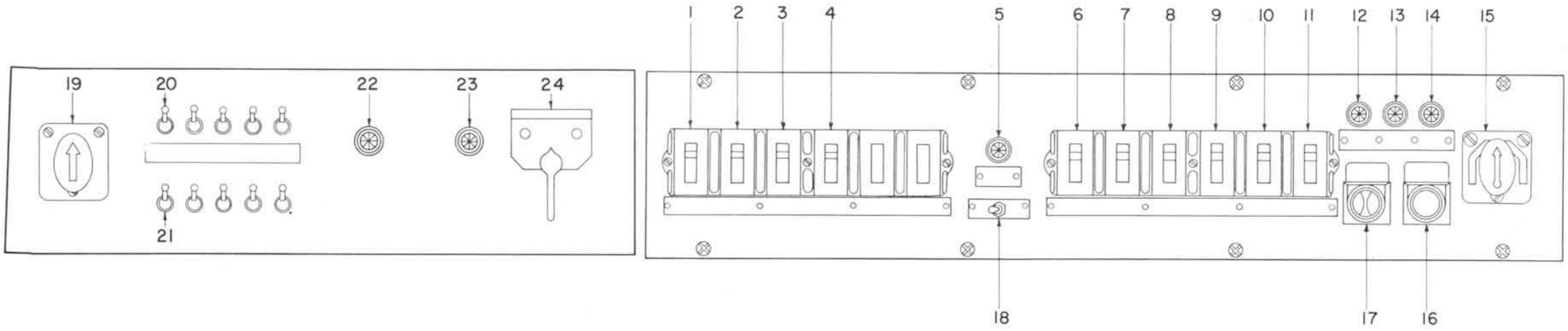

1. Cab Lights and Auxiliaries Circuit Breaker
2. Engine Room Lights Circuit Breaker
3. Fan Control Circuit Breaker
4. Modification Circuit Breakers (If Used)
5. No Battery Charge Light
6. Fuel Pump Circuit Breaker
7. Crankcase Exhauster Circuit Breaker
8. Battery Positive
9. Auxiliary Generator Field Circuit Breaker
10. Air Cleaner Exhauster Circuit Breaker
11. Headlights Circuit Breaker
12. Hot Engine Light
13. Low Lube Oil Light
14. Exhauster Not Running Light
15. Engine Control Switch
16. Engine Stop and Emergency Fuel Cut Off Switch
17. Engine and Fuel Pump Start Switch
18. Compartment Light Switch
19. Motor Cut Out Switch - Behind Cover (If Used)
20. Light Switches
    Rear Number
    Rear Class.
    Engine Room
    Front Hood
    Walkway
21. Power Matching Switch (if used)
22. Air Cleaner Exhauster Not Running Light
23. Ground and Generator Field Overload Light
24. MU Headlight Setup Switch
25. Battery Breaker (Not Shown) - Behind Top Right Door

Fig. 2.43 Basic control panel on ALCO locomotives (see photograph in Fig. 2.42)

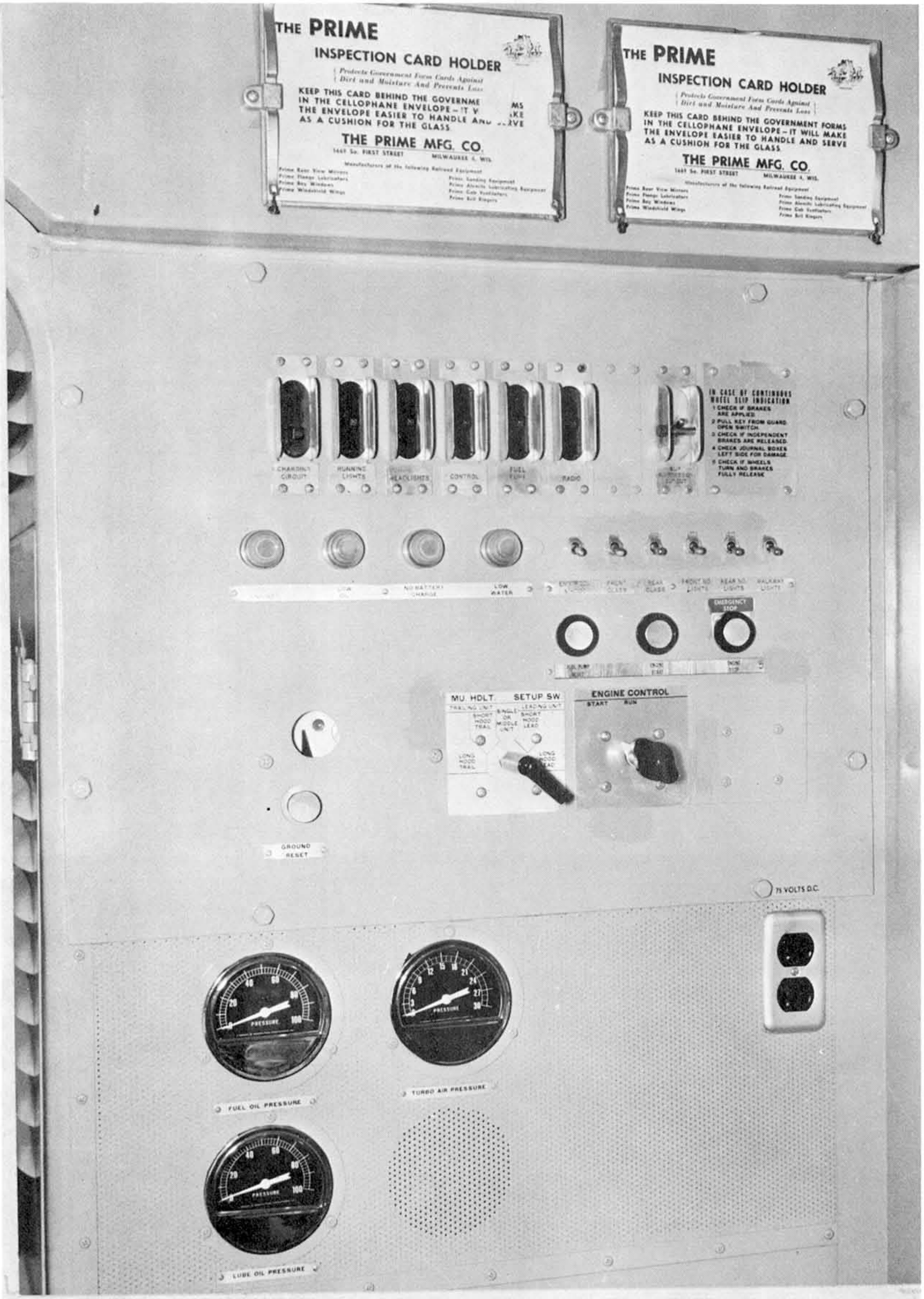

Fig. 2.44 Variation of the basic GE control panel installed in a U25 locomotive

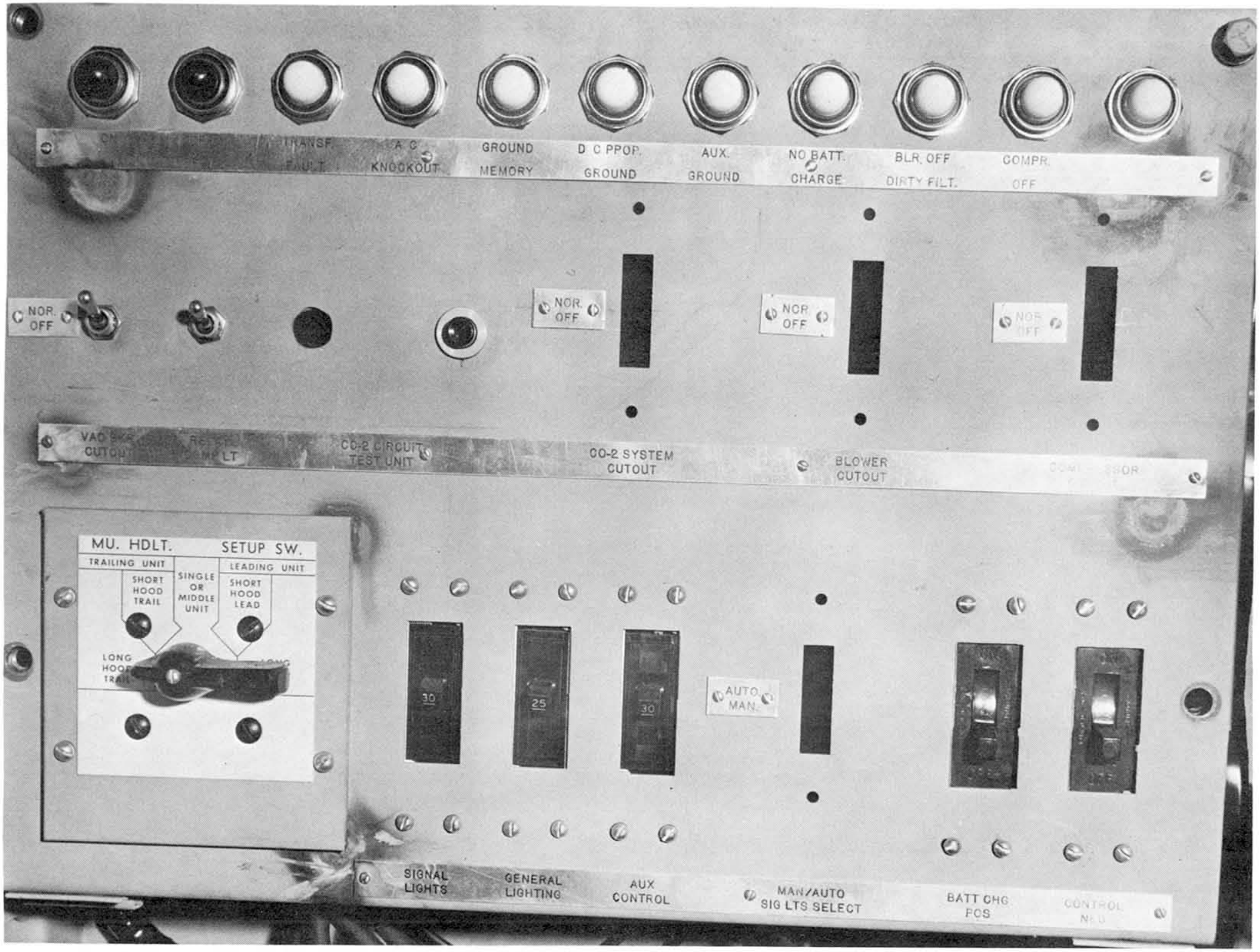

Fig. 2.45 Control console in GE's electric locomotives (built in 1966)

2.3 Recommendations on Human Factors Design of Controls

Two possible approaches are conceivable to improve design of engine controls from the human factors point of view.

(1) The first of the two possibilities concentrates on modification of the present control stand to suit the human operator more satisfactorily and to reduce possibility of mistakes and misinterpretation of indicators. Such an approach has been taken by the American Association of Railroads by establishing recommendations for an improved standard control stand. The major manufacturers follow this line of action, as evidenced by the introduction of the new interlocking EMD controller or by GE in developing and adapting an AAR standard control console. Canadian National Railways also adapted the AAR standard. No drastic departures seem to be planned from the classic basic design which has been in use during the last decade. This approach has the advantages that no major changes are required in the present manufacturing techniques and that introduction of the improved control console is easy since it resembles previous designs closely and, therefore, locomotive engineers are able to operate the locomotive immediately without any transitional complications or need for special instructions and training. However, such an approach has the disadvantages that the modifications constitute improvements only, and the best possible solution from the human factors engineering point of view is not necessarily achieved.

(2) A second approach would be the construction of an entirely

new design, with little or no regard to tradition, in order to develop an ideal control system to suit the operator optimally. In development of the control system, the nature, function, type and accessibility of visual displays, controls, auditory displays, must be determined as a first step. Controls and displays which are to be used most often must be given first priority as to location on the control console. Controls should be mounted for efficient selection and manipulation and in proper relation to the display they affect. Controls to be used simultaneously require special consideration in respect to operational convenience (for example, positioning of the automatic and independent brakes and their corresponding pressure gauges, or selector and reverser). Size of the instrument panel depends primarily upon the normal arm reach of the human operator. In general, convenient arm reach is within 28" from the respective shoulder joint.(156) When the panel space needed to locate all controls exceeds a width of 44", a flat surface, segmented wrap-around console is recommended so as to place all controls within the reach of the seated operator. The total required left-to-right viewing angle must not exceed 190°, however, this angle should be reduced wherever possible through appropriate control display layout.(93) Introduction of automatic control devices and in-cab signal displaying systems would especially lend themselves to be incorporated into a new type of control console. Such control systems could not be used to their full advantage as add-on devices to the present controls. The displays and actuating controls must be designed to correspond to human performance characteristics in order to achieve full effectiveness.(29)

For further improvement of the present designs of control stands, it is recommended that the radio and the remote control unit be built into the AAR standard control. Mounting of these devices on the top of the control stand is unacceptable because they obstruct the engineer's field of view, their wiring hangs loose and sharp edges, mounting screws and brackets present unnecessary danger for the operating personnel. All dial indicators should be of the same size, circular in shape, with the operating position of the pointers preferably in the 9 o'clock position. Standardization of switches, push buttons and indicator lights is also recommended. Their location should be grouped functionally.

Standardization of the control panel and engine starting procedure is also recommended. Comparative study of the control panels, as discussed previously, shows that significant variations exist between the various locomotive models, and identical indicators are presently used for monitoring different functions.

The speedometer is not built into the AAR standard stand. In the latest version of the Canadian National Railways cab design the speedometer is located centrally above the front cab windows so that it is visible to all occupants of the cab. The meter face will be arranged so as to avoid parallax errors. This application is in an experimental stage only. On existing models, the large housing of the instrument obstructs the engineer's forward view frequently, when mounted on the frame of the front window. Incorporation of the speedometer into the instrument group on the AAR standard seems to be advantageous.

3. ATMOSPHERIC ENVIRONMENT IN LOCOMOTIVE CABS

3.1 Review of Literature on Cab Heating and Ventilation

Regulation of the micro-climate in the cab is essential for the well-being of the locomotive engineer. The conditions inside the cab are greatly influenced by the outside atmospheric conditions because railroad operations frequently require that the engineer open his windows for extended periods of time. Air conditioning has limited advantages under such conditions. However, it is essential that the cab be equipped with good heating and draft-free ventilation system which the engineer can regulate according to his own preference. In winter, cab temperature must be at least 59°F, or possibly 64-68°F. To achieve even temperature distribution, the use of fans is recommended.(49) The rate of air exchange in the cab must be at least 1060 cu. ft/hour and the highest permissible air velocity is recommended to be 6.25 ft/sec. in winter, 8.25 ft/sec. in the summer. A slight overpressure is desirable because it prevents dust and exhaust gases from entering the cab.

The International Union of Railroads (U.I.C.) recommends that the airflow enter the cab through filters and through the heating element, and that the air flow rate be adjustable.(155) A draft free circulation pattern must be established in the cab by proper design of the air outlets. The heating system must be capable of sustaining 64-68°F, the minimum permissible temperature is 59°F in the cab. The heaters should be preferably equipped with fans in order to provide adequate heating when the locomotive is not in motion. In summer, air conditioning is strongly recommended for high-speed operation. When the outside temperature exceeds

86°F, the inside of the cab must be 6-11°F below outside temperature. The recommended value of air exchange is 1060 cu.ft/hour in the cab with an air velocity of 0.3-0.5 ft/sec. in winter, and 1.65 ft/sec. in sumner. A slight overpressure is recommended in the cab.(155)

Ample cab heating improves the general comfort of the crew as it obviates the necessity of shutting all windows to hold a reasonable working temperature in cold weather. The provision of two heaters, one at the foot of each driving position, is to be recommended in this respect. The heat is localized where it is most needed and can rise. A single heater at the rear of the cab can be most unsatisfactory in this respect because the output has to be higher than would otherwise be required and the fan must be of sufficient capacity to distribute the heat, or the engineman will tend to leave the driving position to stand by it.(36)

Ventilation problems become increasingly difficult with the increased speeds of modern locomotives.(159) Fresh air supply cannot be provided any more through leakage or by opening the windows. The air exchange facility must be an integral part of the heating system. Inside temperature in the cab, which must always be viewed with respect to the outside temperature, is a very important factor in the well-being of the engineer and has significant effects on his performance, especially on vigilance. In 1969-70 the German Federal Railways experimented with a new cab ventilation system. An illustration of the German principles of cab air flow are shown in Fig. 3.1. The outside air enters the cab wall on the front side of the floor level through air filters. The air enters the cab

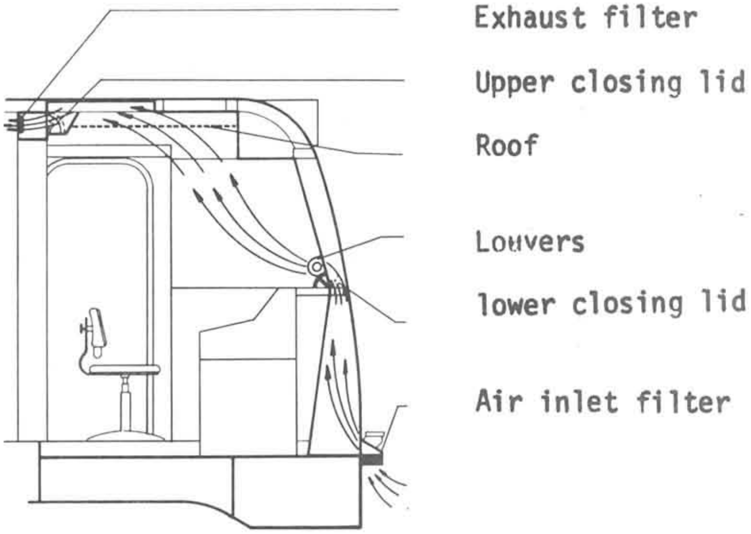

Fig. 3.1 Proposed ventilation system for the German Federal Railways

above the top of the control desk through louvers which regulate volume and flow direction and it is exhausted under the roof through adjustable louvers. While the system was tested and evaluated in practice, the engineers were not informed about the installation of the new system in many cases and consequently did not adjust it adequately. It was also found that even by opening the louvers fully the highest air flow velocity was about 3 ft/sec at a distance of 16" from the outlet, which was not satisfactory on hot days. Therefore, additional improvements were necessary. Difficulty was found on the German Railways with the cab floor insulation. Even on the most recent electric locomotives the floor was uncomfortably cold during the winter, especially in the area under the control desk, where the operator's feet were. Additional insulation was necessary as well as attempts to improve the door and window seals. The authors pointed out that good insulation is needed around pipes leading into the cab. These measures had not been evaluated by the time of publication of the paper (December, 1970). According to another German report, summer ventilation is not a significant problem in city transit cars; an air inlet on the roof and open windows are adequate and do not expose the operator to excess draft.(122)

On the Polish Railways some models of electric locomotives do not have circulating fans in the cab.(79) Engineers of these locomotives complain about the lack of sufficient ventilation during summer. However, some of their diesel-electric locomotives have circulating fans: one under the control desk, another under the roof. The basic parameters of atmospheric conditions in the cab were also studied: temperature, humidity, air velocity, and comfort index during winter and summer operations. The climatic conditions in the cab during both winter and summer were found to be near the extreme limits of comfort for effective human performance. The study showed that good insulation against cold is especially important in the floor and the front wall of the cab and that an adjustable heater is needed close to the engineer's feet. The size of the heaters should be designed to correspond to the heat loss rate of the cab. The amount of air contaminants was also measured inside the cab. Traces of carbon oxides, lead and acrolein were observed both in summer and winter, but the concentration levels did not exceed recommended public health limits.

The Association of American Railroads had an investigation conducted to compare, in terms of clinical and physiological assessment, a group of 210 locomotive repairmen exposed to diesel exhaust with a control group of 154 railroad workers, matched for age, body size, past extrapulmonary medical history and in comparable job status but not having the least occupational contact with diesel exhaust products.(9) Three different engine houses were studied; the examined locomotive repairmen who spent an average of ten years on the job did not show any significant difference in pulmonary function performance from the control group. Air samples of the environmental studies in two engine houses revealed levels of exposure to several known constituents of diesel exhaust which were within the tolerable limits of these substances considered as separate agents. The investigation, however, did find a high frequency of respiratory complaints, physical examination abnormalities and decreased pulmonary function and performance in cigarette smokers compared to non-smokers regardless of occupation.

3.2 Heating and Ventilation on Domestic Locomotives

EMD designs the thermal environment in the locomotive cab with an outside temperature of -30°F which is based on the average Median of Extremes north of the 45th Parallel in the United States. Cab temperature at this outside temperature must be no less than 50°F based on an AAR recommendation which stipulates:

> "New locomotive cabs shall be provided with heating arrangements that will maintain therein a temperature of not less than 50°F taken at approximately the center of the cab and based under normal winter conditions above the 45th Parallel of the North American Continent with normal running condition of the locomotive with doors and windows closed."

The temperature gradient, i.e. the difference between outside and inside temperature, taken at shoulder height for a seated occupant along the transverse center plane of the cab is maintained to be as uniform as possible showing no decline near the steel sidewalls. Based on test results, the forced convective characteristics and dilution caused by infiltration on a moving locomotive balance against the free convective characteristics of a stationary locomotive, EMD found no difference in the cab to ambient air ΔT in a moving locomotive (40 miles/hr) vs. a stationary loco'motive.

A hot water heating system is standard equipment on EMD locomotives, consisting of a blower heater mounted in front of the engineer and a blower heater mounted on the inboard side of the door in front of the brakeman.

Each heater has a three-speed fan control switch. Inlet air is drawn into the heater near the top and air is discharged at floor level toward the rear of the cab. Cab temperature will improve with regard to a stationary locomotive when the unit is under load at elevated throttle notches and the heaters are in proper working condition (i.e., cores are not plugged).

The temperature distribution inside the cab is shown in Fig, 3.2. According to the data in Fig. 3.2, the maximum relative difference is 93°F above outside temperature with regular heaters, and it is measured at the engineer's side. Auxiliary heaters, if installed, can raise the temperature up to 103°F and provide a more uniform heat distribution across the cab. The temperature distribution is different in a moving locomotive, as shown in Fig. 3.3. However, the relative difference between inside and outside temperature is not disadvantageously affected.

About 80% of all locomotives built by EMD are equipped with the standard hot water heaters. Two additional options are also available with the basic heaters: (1) sidewall convectors, and (2) an electric coil supplement. The purpose of the sidewall convectors is to provide a thermal screen between a cab occupant and the steel sidewall to negate the chilling effect of radiant heat loss from the occupant to the sidewall. The average temperature rise achieved with sidewall convector supplements is 20°F giving a 105°F increase on a stationary locomotive at idle. The purpose of the electric coil supplement is only to improve the cab-to-outside temperature difference. It is improved by 24°F using

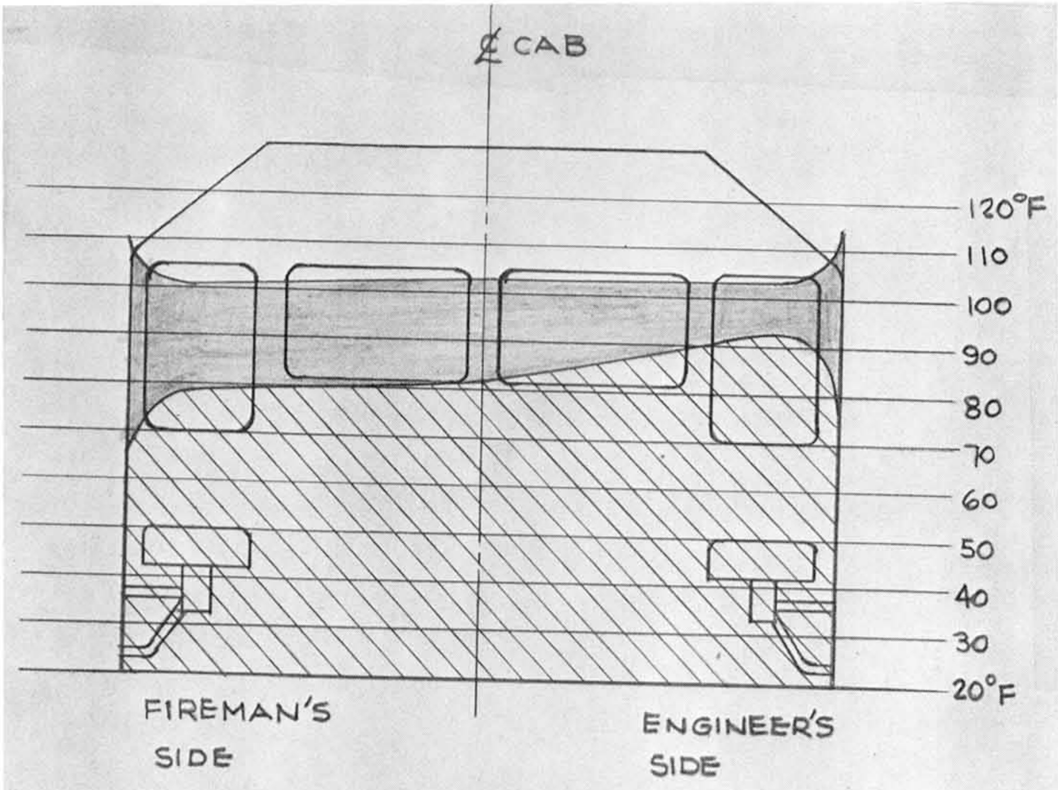

Fig. 3.2. Temperature distribution showing relative cab temperature rise above outside temperature. Upper curve shows basic heaters and auxiliary heaters. Lower curve shows basic heaters only. (Idle test, Soo Line RR, GP35, No. 725, all heaters on high)

these coils which yield a A T of 109°F on a stationary locomotive at idle. The coils have no other effect on the cab temperature gradient achieved with only hot water heaters than to raise the average temperature gradient, as shown in Fig. 3.3.

An all-electric heating system is also available on EMD locomotives. The electric cab heating system consists of two 3 kilowatt blower heaters mounted in the same location as the hot water heaters and having the same air distribution system. There are also two 1.3 kilowatt sidewall convectors, one on each sidewall. Each heater and convector has two-step heating control (maximum total heat input = 8.6 kilowatts - 29,400 B.T.U./hr.). The electric heating system is capable of stabilizing the inside cab temperature at 107°F above the outside temperature and maintains this temperature differential at a 40 mph train speed (Fig. 3.4)

The hot water heater system has a shorter warm-up time than the electric, but the final temperature achieved with it is lower, as shown in Fig. 3.5. The difference in warm-up is due to the different heat output characteristics of the two systems. Electric heating has a constant output, as shown in Fig. 3.6, and the resulting temperature rise is linearly superimposed on the existing cab temperature until equilibrium is achieved. The output of the hot water system is a function of the existing cab temperature, and it levels off from an initial high value to a lower final output as the air entering the heater inlet gets warmer.

EMD locomotives have a coil window defrosting system designed to maintain the interior surface of the four front windows in a frost-free

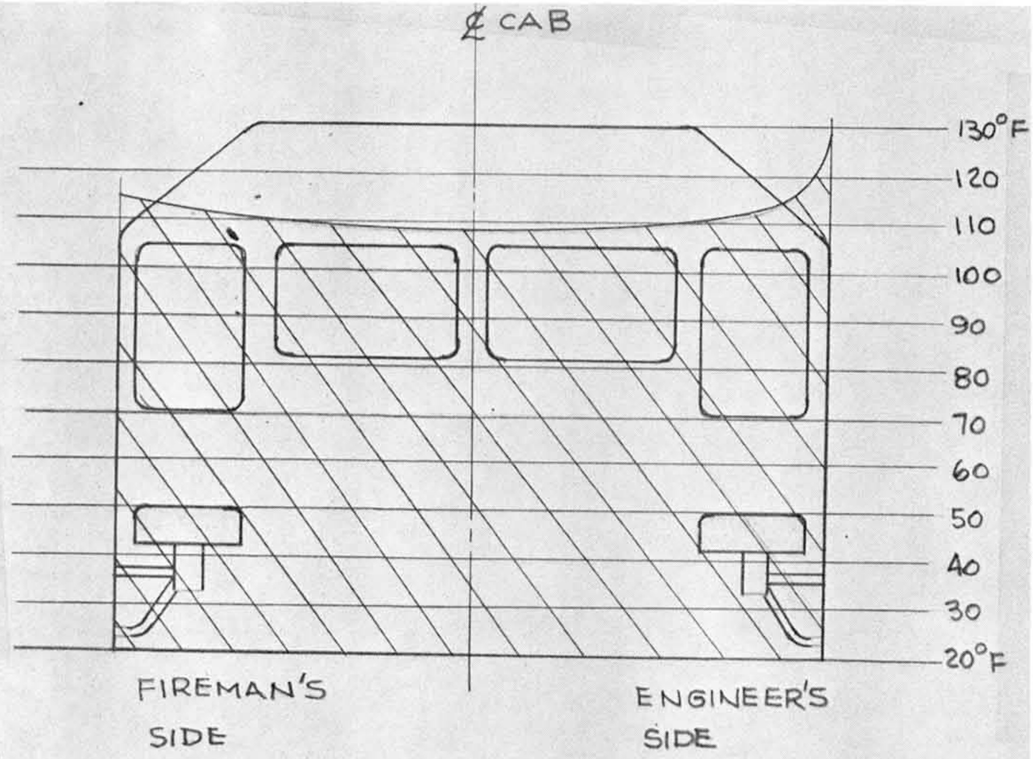

Fig. 3.3 Temperature distribution showing cab temperature rise above outside temperature (Road test: GP35, No. 724, 40 mph, cab forward. Supplementary side wall breaker on "high" at fireman's side, basic heater on "medium" at engineer's side)

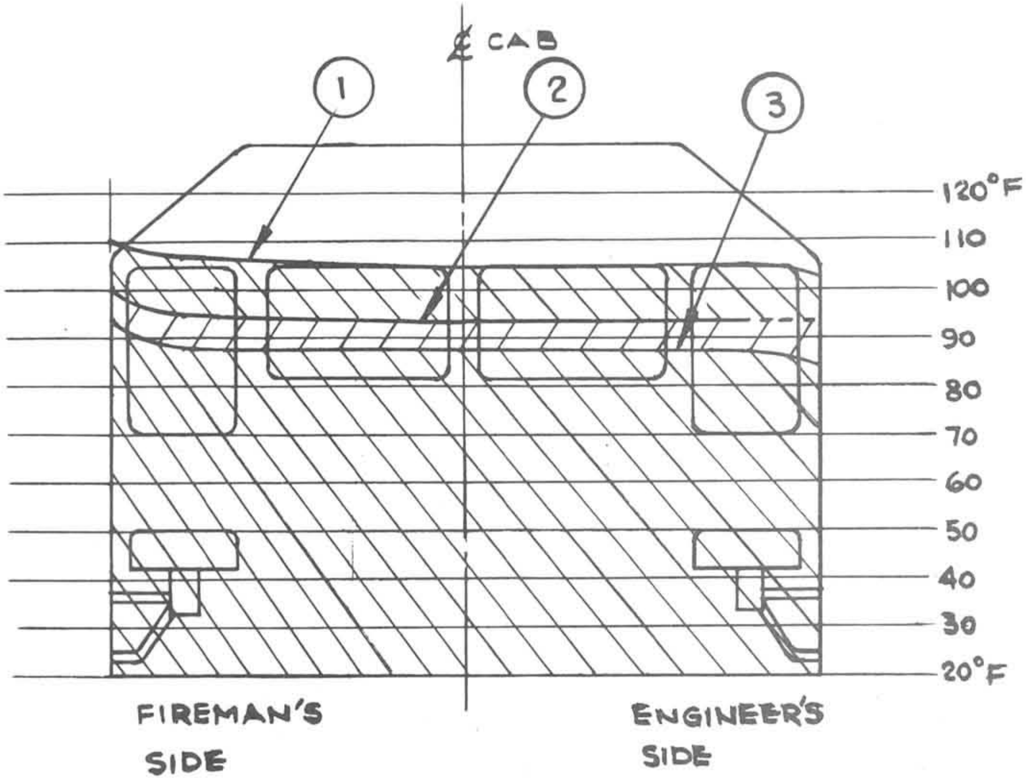

Fig. 3.4. All-electric heating. Temperature distribution showing cab temperature above outside temperature

1. Blower heaters-high; side heaters-high
2. Blower heaters-medium; side heaters-high
3. Blower heaters-low; side heaters-high

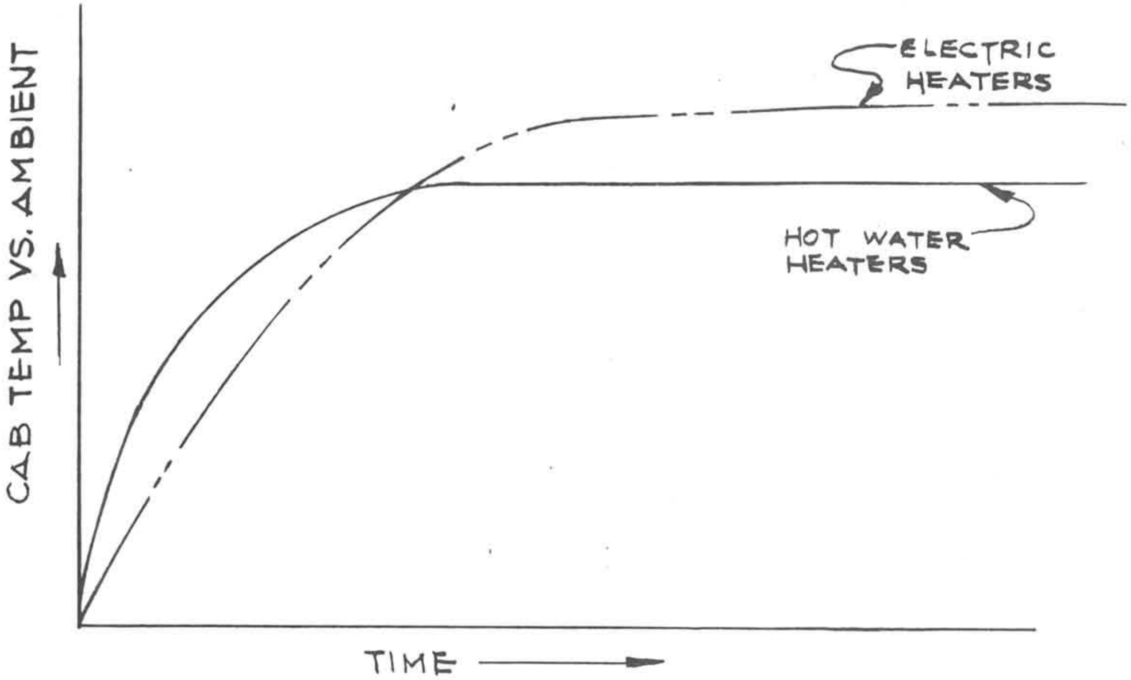

Fig. 3.5 Cab warm-up time

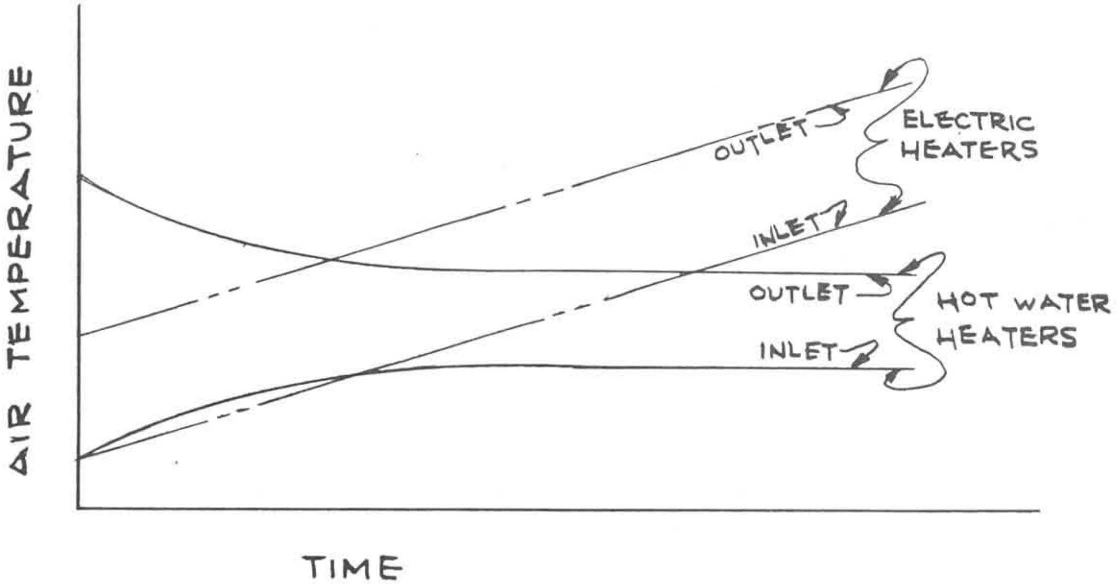

Fig. 3.6 Heat output of hot water and electric heaters

condition. It is not intended as an exterior deicer, nor will the system defrost other cab windows. Defrosting is achieved by conducting and blowing out hot air from the heaters to the window frames. No additional heat is required to operate the defrosting system. Ambient cab air is adequate. Defroster airflow could interfere with the normal operation of the cab heating system, and EMD designers recommend further analysis from an airflow standpoint as an integrated part of the cab heating system. Application of electrically heated window glass, as a defrosting system, has been tried experimentally: Union Pacific ordered some locomotives from EMD equipped with such a system. Such windows distorted color slightly and replacement was expensive, thus UP discontinued their use.

GE has used a forced air-hot water heating system on all its domestic locomotives since 1960. Cleaned, pressurized air from the equipment ventilation system is forced over hot water heaters to provide crew comfort in winter. In early U25 and U28 models the heater core was at the rear cab wall but since 1966 the heater core has been under the front windshield behind the control console. Air ducts with adjustable louvred outlet grills distribute the air to (1) a position at the engineman's feet and (2) an outlet aimed toward the fireman's position. Additional air ducts carry "defroster" air to all windows on the front wall of the cab. In summary the heat can be cut off by valves in the hot water piping permitting ventilation of the cab by cleaned air drawn from the outside by the main equipment blower. A damper is provided for control of the main air flow and the adjustable discharge louvres permit individual control of the air at each operating position. Supplemental electric heating can be and has been provided in some special applications such as the 1972 built U30C's for the Union Pacific Railroad Company.

Santa Fe has started experimenting with cab air conditioning systems. Three units have been installed so far on Santa Fe locomotives, and further tests are scheduled for the summer, 1972. The units are mounted on the top of the cab, air is recirculated and attempted to be kept at 80°F with a relative humidity of 50%. While there is no difference in internal cab conditions in a moving vs. stationary unit from a heating standpoint, there is a difference from the standpoint of air conditioning. Convection in designing air conditioning is less important than for heating, due to about 20°F temperature difference only between inside and outside conditions. However, infiltration becomes very important when considering air conditioning due to the large latent cooling loads created by the infiltrated hot air. The cooling capacity of the unit must be 30,000 B.T.U./hr in order to maintain the prescribed cab conditions of 80°F at 50 percent relative humidity in the high outside temperature and humidity conditions encountered in the South and Southeast. Air distribution must be such that the cab occupants will not be exposed to chilling drafts, yet cooled air will wipe hot interior surfaces to alleviate discomforting radiant heat to the individuals occupying the cab. The locomotive cab air conditioner is thermostatically controlled by means of an adjustable control located inside the air conditioning unit in such a manner that it is available for adjustment by maintenance personnel only. This is necessitated by constant tampering by service and operating personnel.

Improvement of heating and elimination of drafts constitute a significant area in development of a standard cab by Canadian National Railways. CNR has worked out recommendations for improved insulation inside and around the cab door, in the floor and the roof, inside the walls and around the front corner posts (CNR Project No. 7131, drawings 15-19). A full-scale mock-up is now completed and one locomotive has been modified to test heating, defrosting, insulation, and acoustic treatment. The first purchase orders specifying the new cab have been issued.

3.3 Recommendations to Improve Atmospheric Condition in the Cab

Survey of both the literature and the design of domestic locomotives reveals that the thermal environment in winter is adequate for the human operator because the cab heating systems seem to be appropriate for most types of operations. However, Canadian National Railways found the overall cab heating inadequate for their winter operations. This is mainly because of the presence of drafts and poor insulation provided to date. There are no indications that the heating systems were designed to provide the necessary rate of air exchange and that the supply of fresh air is sufficient when all doors and windows are tightly closed. For the average work space, one cu. ft. fresh air per minute per square foot of floor space is recommended,(156) which, in a 65 ft^2 cab, corresponds to 3900 cu. ft/hr. The free volume of an average domestic cab is about 400 cu. ft., thus the cab air would be exchanged roughly ten times in an hour.

Consideration must be given to ventilation problems in the summer. Presently, the engineer cannot ventilate the cab satisfactorily in warm weather without opening the windows. However, driving with open windows increases noise level and makes most sound insulation measures ineffective. With the windows open, drafts can reach excessive velocities, air pollutants and flying objects can enter the cab. A sufficient summer ventilation system should be designed until application of air conditioning, which must be the ultimate solution, becomes standard.

Maintenance of a slight overpressure inside the cab is recommended during both summer and winter operations to keep air pollutants from entering. Even sanding contributes some silica to the cab air which is breathed by the cab crew.

Presently, the air brakes are vented inside the cab. This procedure is the source of the loudest noise in the cab and also stirs up a cloud of dust in the cab. The brakes should vent outside the cab, but brake activation sounds must not be completely eliminated from the cab, because the engineer uses the sounds as feedback for brake adjustment. At present, EMD makes available an air brake arrangement which vents the automatic service and independent quick release exhaust ports outside of the cab. However, to date only one railroad specified this braking method.

4. NOISE AND VIBRATION IN LOCOMOTIVE CABS

4.1 Survey of the Literature

Noise: Analyses of noise problems in locomotive cabs can be divided into four distinct areas of interest: (1) sound level inside the cab, (2) sound level outside the cab, (3) noise sources and transmitters, and (4) hearing damage and auditory physiology related to locomotive operation.

Measurements and studies of inside and outside locomotive noises establish the level of sound pressure to which the engineer is exposed. Analysis of the sources and transmitters of noise points out possible means to reduce sound level.(37) Studies concerning hearing damage due to locomotive noise show if hearing protection devices should be used on certain locomotives or in various railroad occupations.

A recent domestic study measured the sound environment as perceived by the crew members in locomotive cabs.(136) Both db(A) levels and frequency band analysis were obtained on an ALCO Model AGP-20-MSC locomotive of the Long Island Railroad in commuting service with 45 mph average speed, and on a twin pair of EMD SD-45 locomotives of the St. Louis-San Francisco Railway in freight train operation with 60 mph average speed. The study found that the primary source of noise in the cab is the engine and that wheel noise is less obtrusive. The cab noise averaged 90 db(A) on both locomotives. The noise level increased to 93-98 db(A) when the horn was sounded (135 times/hour in commuter service, 40 times/hour in freight service). The octave band analysis established that engine noise consists of mostly low frequency components, and that the air brakes produce very annoying high frequency sound

For the German Federal Railways, Zboralski carried out extensive noise investigation over a period of years.(158,159,160,161) In one of the papers the intelligibility of acoustical signals in the noise environment of switching locomotive was investigated. The influence of the frequency spectrum of noise and signals, masking effects, clearness of syllables and sentences on audibility of voice comnunications was analyzed. Sound insulation techniques used on the German V60 switcher to reduce noise in the engineer's cab are described. A noise level between 85 to 95 phon is suggested to be an upper limit in cabs with open windows, for intelligibility of speech. The measurements indicate that the highest sound level values varied between 68 to 84 phons from idle to full load condition of the engine.(161) Details of the correct technique of noise measurement are described separately.(159) Noise was measured in the cab of two diesel locomotives with closed windows at idle, half throttle, and full throttle and at 60 mph speed. Octave band analysis of the cab noise revealed that intensity of sounds in the 50-100Hz range is very high, but this fact does not show up in measurements with the db(A) scale because of the cut-off filtering characteristics of the db(A) standard. The difference is sometimes as much as 32 db. Noise on the locomotive is produced by the combustion process in the engine, by exhaust and air intake, by the air compressor, cooling fan and the rolling motion on the wheel-rail interface Noise levels in other diesel locomotives of the German Railways were found to be near the threshold for producing permanent hearing loss during long-term exposure, while the noise in yet another model was below this level.(109,110)

The frequency spectrum of noise was measured in the cab of two diesel and three electric locomotives of the Polish railways at speeds of 37, 50, and 62 mph. The overall sound level did not exceed the recommended N80 curve in the audible frequency spectrum; however, it reached 105 db at low frequencies.(79) Such sound levels also affect normal physiological functions in the circulatory, pulmonary and nervous system. Therefore, it is recommended that the N80 level be reduced to the permitted noise level of ISO-N75, which is also the maximum permitted level for locomotive cabs in the Soviet Union.(146)

In a human factors analysis of locomotive cabs and in recommendations to the International Union of Railways Physicians (U.I.M.C.) Wittgens suggested 80 db(A) maximum permissible noise level in locomotive cabs.(154,155) For measuring noise levels, all doors, windows and ventilation louvers in the cab must be closed and auxiliary equipment which is used longer than one-fourth the duration of standard operation of the locomotive must be turned on. The locomotive must also be running with high speed and load for the measurements.

Van Rijn investigated noise level in railroad cars for the Netherland Railroads.(145) The recorded noise spectrum is superimposed on curves of equal nuisance; speech interference level, expressed in decibels, is defined as arithmetical average of acoustic levels, and an index of speech intelligibility used for measurement and evaluation of railroad noise levels is described. The advantages and application areas of the various comfort rating methods are discussed comparatively.

The Office for Research and Experiments of the International Union of Railroads published Reports No. 8 and 9 by Committee B.13 on "Noise Abatement on Diesel Locomotives".(98) The reports clearly define methods and standards which should be followed to measure locomotive noise levels in order to make findings of various investigations comparable. Such standardization of measuring techniques is necessary because there is evidence that the various national railroads obtain different results. For example, Koffman reports tests for objectionable noise levels on seven diesel-electric locomotives with exhaust silencers.(76) Representatives of the Swiss, French, German, Italian, Netherlands, and British Railways measured noise levels according to ISO guidelines but with their own instruments in a study under auspices of International Union of Railways. Noise levels of 74-82 db(A) were measured 50' from the locomotive at a 5'3" height with engines at maximum governed speed. Noise levels of 57-65 db (A) were measured with engines idling. Comparative evaluations revealed some disagreement because of variations in measuring equipment. It is recommended that reducing fan tip speed, and change in fan drive design could reduce noise levels. The directional affect of noise can be reduced by positioning the cooling air inlet at the front rather than at the sides and by reducing the area of various side louvers as far as possible. Details of reducing noise originated from locomotive cooling fans are discussed elsewhere.(78) A further study presents how effectively noise levels can be reduced in railroad cars for the British Railways by redesign of the suspension system.(77) The tests showed that at 90 mph amplitudes of primary suspension oscillations were reduced from ± 1/4" to ± 1/8". Figures showing acoustic and thermal insulation techniques used by British Railways are also given.

The physical characteristics of railway noise are examined and the development of psychological instrumentation used to measure locomotive noise is reported by Walters.(150) The investigation was planned in two stages: (1) establish and test noise survey methods to measure annoyance due to railway noise in residential areas and (2) establish the relationship between the percentage of people dissatisfied with the effect of the railway noise and the distance of their dwelling from the line. The study was confined to the effect of British Rail's 25KV electrified lines and reports progress up to the start of the second stage.

With respect to sources of locomotive noise, an analysis of the sound environment in domestic locomotive cabs concluded that the primary source of sound is the engine, with wheel noise being less obtrusive when horn warnings are not sounding or brakes are not being applied.(36) However, a recent study of the rapid transit cars of BART found that the track and the wheels are the main source of noise, the propulsion system and auxiliary car-carried equipment are only secondary noise generators.(101)

The level of noise originating from rolling process between the wheels and rails is analyzed and found to be significantly different among various types of rail construction in the German Federal Railways.(158) Noise in the cab of electric and diesel locomotives of the German Railways was investigated, separating noise generated by the engine from that generated by the wheel-rail system. In another paper several methods are presented and evaluated to reduce diesel engine noise.(159) The suggested methods include application of aerial sound absorption, decreasing sound conduction through the chassis and mufflers, and constructional modification of the engine and engine suspension system. Figures are presented to illustrate the application of a combination of the above techniques to reduce noise on a German diesel locomotive. Betzhold investigated the wind noise effects in city transportation and how various insulation techniques can be utilized to reduce this effect on noise level.(13) Measurements for the Austrian Railways analyzed noise sources, sound transmitting media and fundamental noise abatement methods. The track tests revealed that the noise level in railroad cars depends heavily on train speed.(63)

The technical aspects of noise and vibration problems encountered in design and operation of the railways of the Soviet Union are discussed by Bobin.(15) In another study equations are derived to calculate the cost and expenditures on noise control measures (including costs of maintenance), for planning and supervising such measures and to provide criteria for evaluating the economic feasibility of such a program.(3)

A German study reported that definite hearing damage was found among

1,198 railroad workers.(81) Two separate age groups were differentiated in the investigation: workers under 35 years of age, and those above that age. Hearing damage was found to be incurred much more rapidly among the older than the young individuals. The older group suffered hearing loss as early as six years after exposure, while the same levels of hearing loss were reached in 10 to 15 years of exposure in the younger group. It is deduced from the findings that older people should be excluded from high-noise working conditions. Minimum hearing threshold curves are drawn, arranged in age groups up to 50 years to illustrate the point. The findings are related to conditions that apply in the change-over from steam to diesel engine operation.

Noise exposure of diesel engine repairmen in a servicing shop showed that noise stress is caused mostly by staying in the engine room where the motor is running slow or idle.(110) The study concluded that individual hearing protection devices must be worn in order to reduce noise levels below risk range and to prevent the development of permanent hearing damage.

In an American study, high noise levels have been observed in railroad cabooses which make radio communication difficult, endanger hearing, and generally degrade working conditions for the crew.(151) The paper discusses various methods used to reduce noise levels from a Speech Interference Level (SIL) of 82.5 db to SIL of 68.6 db. The noise spectrum finally achieved compares favorably with noise in the first-class cabin of large commercial jet airliners. The relative importance of vibration insulation, structural damping and acoustic absorption techniques as noise reduction measures is discussed. Techniques of equipping hearing protection devices with an individual built-in warning radio transmitter were investigated for the German Railroads.(84) The transmitter was to be used simultaneously with hearing protection devices on track laying equipment in high noise levels. Various models were evaluated to find an ergonomically optimal weight distribution. Problems were experienced with good fixation and even distribution of weight on the skull.

Vibration: In general, comfort levels of a person exposed to vibration are expressed on a plot of maximum tolerable acceleration as a function of vibration frequency. The acceleration required to induce a given level of sensation in the body changes markedly with frequency, being a minimum (i.e., the body is most sensitive) at frequencies between 2 and 20 (and particularly around 4-6) Hz. Discomfort is caused by resonance and muscular strain of large segments of body masses, such as the various organs. Man tries to overcome discomfort by tightening the appropriate body muscles which brings on fatigue. At lower frequencies the body reacts as a single mass, and the comfort level depends primarily on the rate of acceleration. At higher frequencies, between 20 and 30 Hz, the head resonates, particularly on a sitting person, with consequent deterioration of visual acuity in addition to physical discomfort. At these higher frequencies comfort is proportional to maximum vibration velocity. Of course, position of the person (sitting or standing) and direction of vibration (vertical, transverse, or horizontal) are also important factors: resonance of various body parts in a standing person are somewhat more damped than for a seated person under vertical vibratory loads, and a standing man is considerably more stable to lateral vibrations than his seated counterpart.(27,93)

The first vibration studies, concerning application to the railroads and passenger comfort, were published early in 1935 and 1940 but are still quoted frequently.(25,26) An AAR report uses generalized vibration tolerance data for railroad application.(5) In this report and also in a British study(8) vehicle riding qualities are deduced from accelerometer recordings. Vertical and horizontal vibration sensitivities of the human body are separated to determine riding comfort levels for British Railways. In another study, low frequency vibrations were measured for the British Railways from point of view of passengers' comfort as reported at the 13th Congress of the International Union of Railroad Physicians (U. I.M.C.).(123) No vibration component was found under 1 Hz. It was also pointed out that discomforting vibration conditions can be significantly modified by increasing the distance between the car axles.

Vibration levels in the cab of two types of diesel and three types of electric locomotives of the Polish Railways were measured in the frequency range of 31.5 Hz to 4000 Hz.(79) The experiments established that the acceleration level increases with increased train speed from 37 mph to 62 mph. Accelerations between 0.5-1.6 m/sec^2 (0.05-.163g) were found, which are well within the recommended values for human exposure, as shown in Fig. 4.4, but still above the acceleration level of $0.8 m/sec^2$

(0.082g) permitted above 30 Hz in the Soviet Union for cabs on new locomotives.(97) Due consideration must be given to the fact that the human body is relatively unaffected by vibration above 10Hz, while it is most sensitive to low frequency accelerations between 2 and 6Hz.

For the Japanese National Railways a large number of measurements of vertical accelerations were taken on the floor of six New Toraido Line cars, just above the truck centers.(88,89,144) The lateral and vertical accelerations were both found to rise almost linearly with speed averaging about 0.129 at 150 mph, between the frequencies of one and two Hz.

Hanes summarized vibration problems for the U. S. Urban Mass Transportation Administration.(54) The report lists a number of references pertaining to passenger comfort conditions. Another domestic report also contains an extensive list of references on the vibrational comfort limits in high-speed ground transportation.(28) A recent study investigated limits of acceleration levels and found comfortable 0.11-0.15g for longitudinal, 0.06-0.22g for lateral accelerations.(47) These levels are, however, suggested for review in future application because they are about 0.10g lower than those accepted by automobile users.

Various comfort indeces have been devised to express human comfort or discomfort during vibration. A TRW Inc. report summarizes the indeces for application in steel-wheel-on-steel-rail systems with speeds in the 200-300 mph range.(142) The threshold of comfort limits in vertical, longitudinal, and lateral vibration are expressed with the permitted acceleration level in the frequency range of 0.4 Hz to 100 Hz. Consideration is given to jerks (the time derivative of acceleration) as an important factor in vibration comfort. For comfort in vertical oscillations, a constant jerk limit should be held between 1 and 6 Hz, constant acceleration between 6 and 20 Hz, and constant velocity from 20 to 40 Hz. Because of the large displacement amplitudes below 1 Hz, a constant acceleration criterion is maintained below 1 Hz.

Based on data of human tolerance to vertical vibrations, a comfort criterion of oscillation is established in an active vehicle suspension system.(102) The methodology for optimum solutions is obtained for the case of vibrations in which the root-mean-square acceleration of the vehicle is to be minimized. Much work is done on vibration problems for high-speed ground transportation systems. The application of an active ride stabilizer system is reported in which shock absorbers, responding passively to track vibrations, are replaced with hydraulic actuators with control action proportional to car acceleration.(100) The active system is shown to improve ride quality markedly.

A system of active vibration insulation has been developed for aircraft seating to provide vertical dumping of the dynamic environment associated with low-a1titude, high-speed flight.(27) The dynamic environment included periodic and random vibrations, and transient and sustained accelerations, occurring separately and simultaneously. Measurements were also made on human performance as affected by the active seat insulator which reduced vertical vibrations reaching the torso to comfortable levels but resulted in relative motion between the man and the controls and instruments. No significant difference was found in tracking error results when the isolation system was employed, although the subjective comfort level was greatly improved. The system can be tailored to meet a variety of environmental and isolation requirements other than those associated with aircraft, for example as suggested in the paper, suspension systems of off-the-road vehicles and high-speed trains.

4.2 Noise and Vibration on Domestic Locomotives

Noise: The noise level in the cab of a 1972 production EMD locomotive is 84 db(A) at the height of the engineer's ear (50" above the floor). This value is below the 90 db(A) level specified by the Department of Labor in the Walsh-Healey Act as permissible maximum noise exposure for eight hours. A noise level of 87 db(A) was measured in the cab of locomotives produced in previous years. These values and the frequency spectra of the cab noise are shown in Fig. 4.1. The figure, which was received from EMD, shows that the noise level is significantly lower in the 1972 locomotives throughout the audible spectrum except at low frequencies. The noise reduction was achieved by the application of a new insulator material built into the cab walls and ceiling. The insulator (Baryfol) is made of two 3/4" thick layers of foam rubber with a solid but flexible 1/8" inner wall in between.

The above measurements were taken behind closed windows in a standing locomotive with the engine running at high speed and maximum load. The engine and the auxiliary equipment are the major source of noise. According to EMD designers, rail noise does not increase the overall locomotive noise level in the cab significantly until above 40 mph speed. Noise data as a function of train speed were not available.

The noise level in the cab of a new GE locomotive is also shown in Fig. 4.1. The GE data, taken also behind closed doors and at full throttle, are superimposed on the EMD measurements for comparison. The noise level in the GE cab when the horn is not sounding is less than in

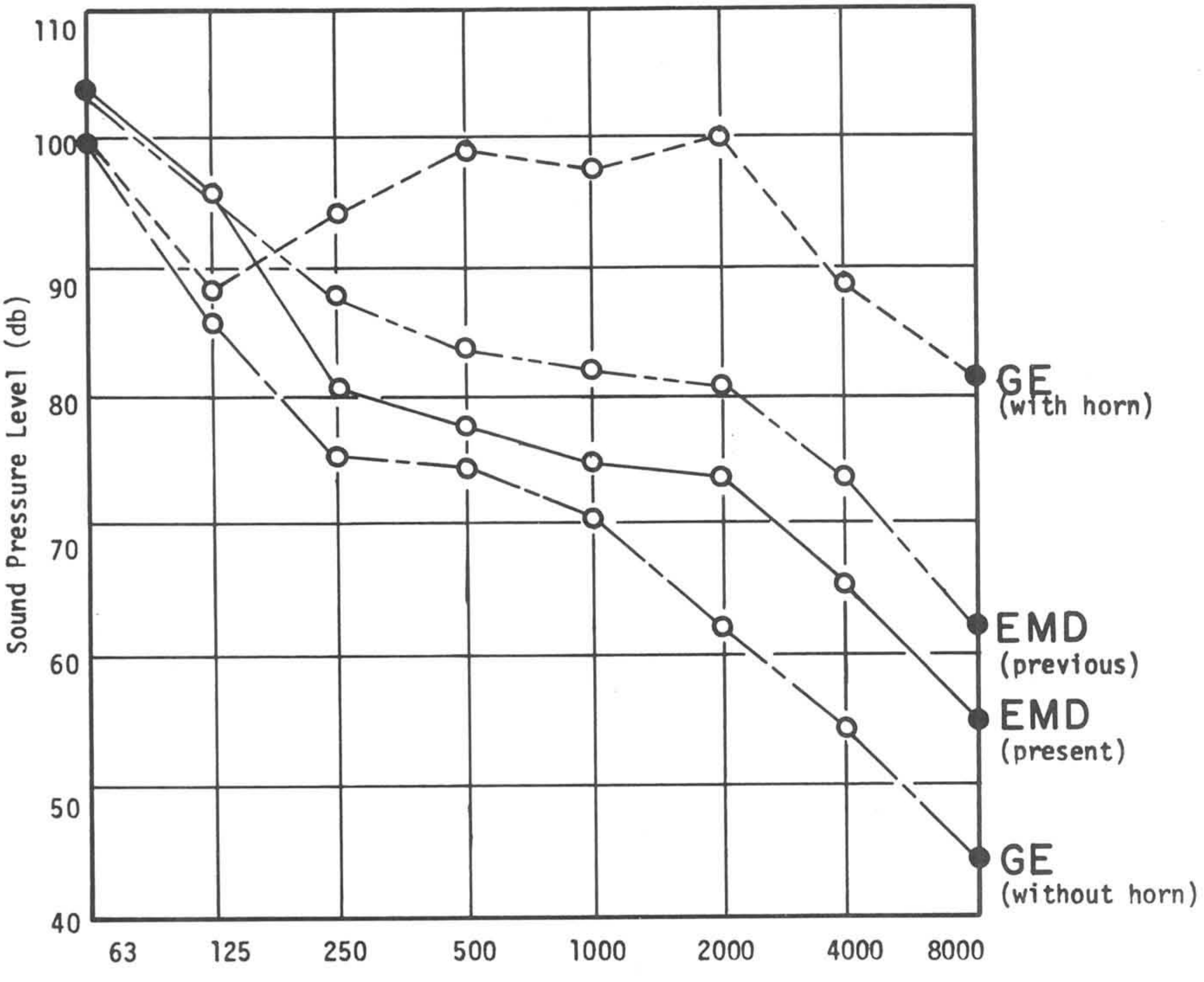

Fig. 4.1. Sound environment in locomotive cabs

the EMD cab. Operation of the horn increases the sound level significantly, especially in the higher frequencies. Further details of the noise condition in GE locomotive cabs are presented in Figs. 4.2 and 4.3 without and with the horn in operation, respectively. It can be seen in the figures that opening the windows increases the cab noise level relatively slightly, while opening the ventilation outlets results in a much larger increase of the noise level. GE uses fiberglass insulation in the cab walls and ceiling of the "U" series locomotives, presently in production.

Data on the previous figures contradict the findings of a recent study on the sound environment in domestic locomotives.(136) These measurements, taken in actual train operation on the lines of two different railroad companies, found 90 db(A) noise level inside the cab which increased to 93-98 db(A) when the horn was sounded. Discrepancy between the two sets of data is probably due to differences in conditions during noise measurements. The differences are significant (3-6 db) and therefore it is recommended that uniform methods of measurements be used. Noise levels should be measured during actual train operation and an average of a number of readings taken at random intervals during several hours should be used as an indicator of the general cab noise level. During activation of the horn and the air brake system, the noise level increases significantly above the ambient level. Sound studies should extend to include such occurrences.

The Swedish Railroads set a goal of 78 db to be achieved in the cab. Such low noise level is needed there because their operation depends heavily

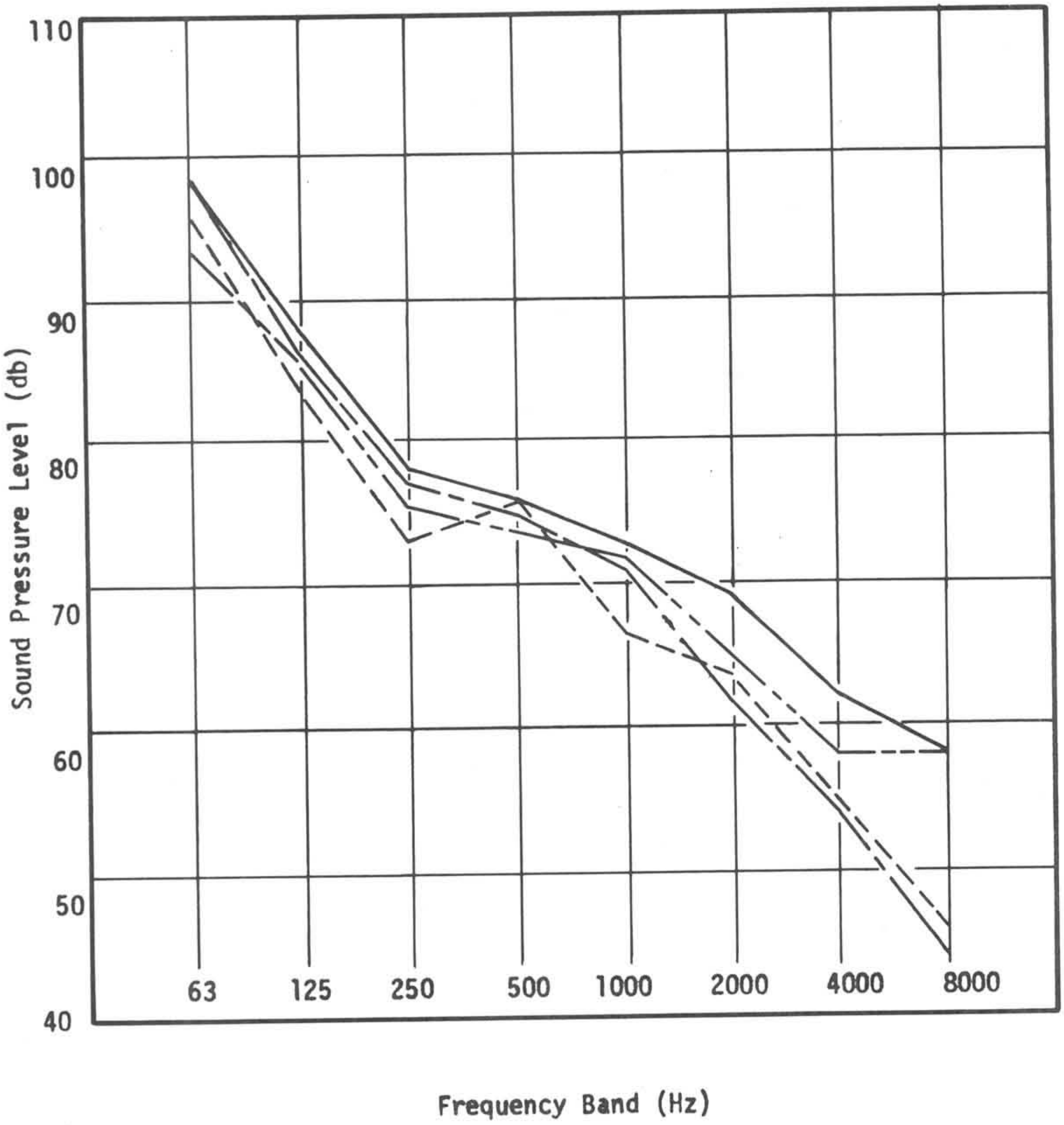

Fig. 4.2 Sound environment in GE cabs, without the horn sounding

——— — ——— doors and windows closed

– – – – – windows open

——— – – ——— ventilators open foreward

——————— ventilator open to rear

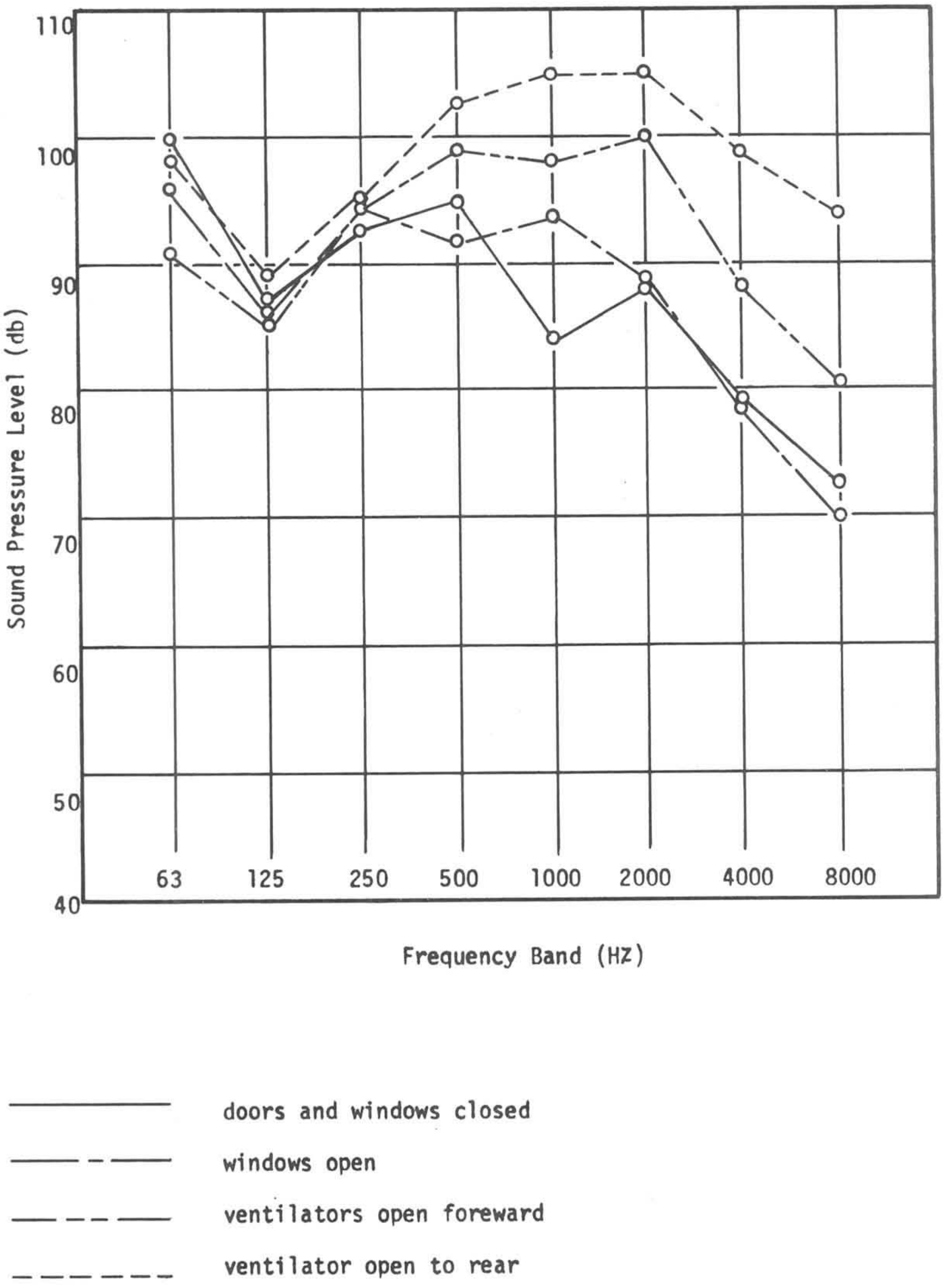

Fig, 4.3 Sound environment in GE cabs with horn sounding on voice communication. In order to isolate the cab from the noise sources, they plan to construct a separate cab box which will be mounted on the locomotive chassis as an independent unit. EMD considers practicality of construction questionable at this time for American locomotives.

Vibration: EMD locomotives are designed to satisfy a set of vibration standards, which were established by the company. Velocity of the vibration must not exceed 0.25 in/sec in the middle of the floor, and 0.20 in/sec on the floor at the location of the engineer's seat in the frequency range between 10-100 Hz. These data are superimposed on the graphs of human vibration tolerance, taken from Hillborn (38, 62) and reproduced in Fig. 4.4. The figures shows that the EMD vibration standard is in the vicinity of the unpleasant and annoying limit of exposure to vibration. The 0.20 in/sec velocity limit even crosses this curve and exceeds it above 30 Hz frequencies. The measurements are taken in a standing locomotive with the engine running. EMD designers maintain that rail generated vibrations are attenuated by the locomotive suspension system and do not affect the operator significantly.

In the Soviet Union the recommended limit for vibration is 0.80 m/sec^2 (0.082g) above 30 Hz(97) on the floor of the locomotive. This limit is also shown in Fig. 4.4. It can be seen that the Soviet recommendation coincides with the curve of unpleasant sensation at 30 Hz and that it is identical with the EMD measures, though EMD standard is expressed in terms of vibration velocity as a criterion.

On GE locomotives, the vibration at the seat attachment locations on

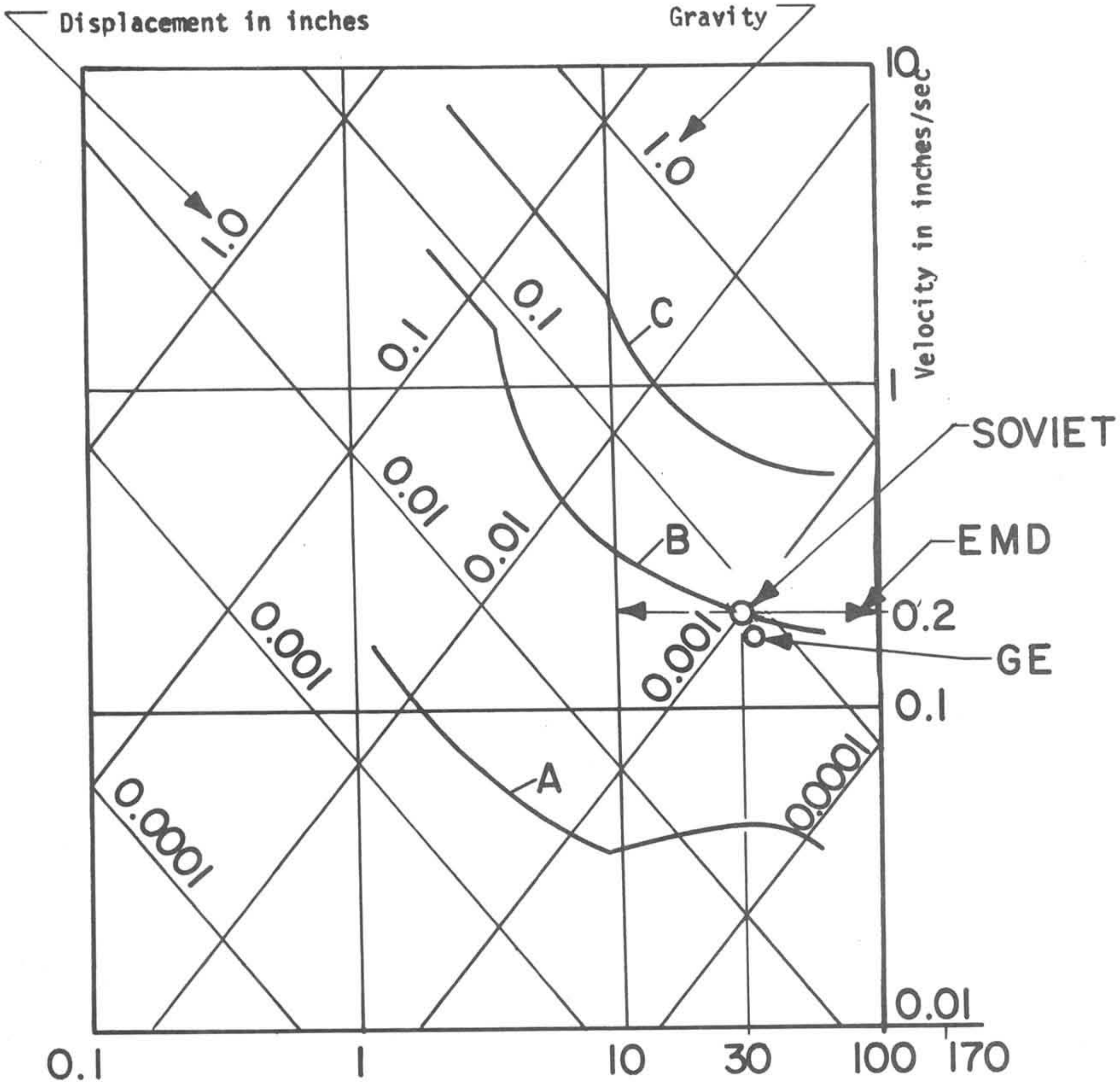

Frequency in cps

Fig. 4.4 Human tolerance to vertical vibration

A - Perceptible and tolerable
B - Unpleasant and annoying
C - Painful and unbearable

each side of the cab is 0.08g at 35Hz vertically, and 0.01g in each of two horizontal directions. The GE value is also shown in Fig. 4.4. The GE value is located between the threshold of "perceptible and tolerable" sensations and the limit of "unpleasant and annoying" vibration.

EMD locomotives undergo vibration testing before release by the manufacturer. Longitudinal and transverse measurements are not included in this program. This testing is part of the company's quality evaluation program and is aimed primarily to detect possible manufacturing faults. In 10% of total EMD locomotive production, the vibration testing is extended to five points on the locomotive and it is planned that a 13 location quality control program, measuring locomotive vibrations, will be introduced in the near future.

Since the human body is most affected by vibrations lower than 10 Hz frequency, the range of measurements should be extended to include frequencies between 1-10 Hz. Furthermore, the above indicated values of 0.20-0.25 in/sec or 0.08 m/sec^2 are in the vicinity of the threshold of unpleasant and annoying sensations, as indicated in Fig. 4.4. Vibration reduction of the seat cannot be considered adequate in the standing position and puts his elbow on the window ledge. Therefore, further investigations are needed to determine riding characteristics of locomotives.

For equipment operators, exposed to vibration, the Military Standards specify levels of whole body vibration along all three axes in terms of acceleration permitted for various lengths of time.(92) Not only are tolerance limits defined, but the proficiency limits of the individual exposed to vibration are also established. Where comfort is to be maintained, the acceleration values must be no greater than 3.15 times less than the proficiency limits. The upper limit of such comfort specification corresponds to the vibration criteria used by EMD and the Soviet literature for permissible levels at the floor of locomotive cabs.

4.3 Recommendations

Noise: A recent field investigation of noise in locomotive cabs found significantly higher noise levels than those obtained from the manufacturers. The differences can be partially attributed to differences in operating conditions. The field study measured the noise on locomotives in operation with 45 and 60 mph speed, while the noise data of the manufacturers were collected in standing locomotives with the engine running only. However, the differences point out the need for conducting a comprehensive noise study on the sound environment in locomotive cabs. Track conditions, train speed, and engine loads should be used as parameters to describe noise conditions in the cab. If the study found the noise level on certain models to be excessively high, capable of producing hearing damage, or above the limit specified by law, the engineers on such locomotives should be required to wear hearing protection devices. There are devices manufactured which attenuate undesirable industrial noises, but do not hinder speech communication (for example, GE "Peacekeeper"). Such devices could advantageously be used in the railroad industry.

Noise, generated by special sources, should also be analyzed as possible means to reduce cab sound level. Presently the air brake system vents in the cab, and this procedure is a major source of annoying noise. The brakes should vent outside the cab. However, it is desirable not to eliminate braking noises completely from the cab because the engineer uses the sound as feedback for brake adjustments.

Another major source of noise is the horn. It is conceivable that by proper design and positioning of the horn, with consideration to directivity of sound waves, the engineer could be protected. It is known that obstacles in direction of wave propagation cast sound shadows. High frequency sounds (whose wavelength is shorter than width of the obstacle) are generally attenuated in the shadow zone.(93) Barriers based on this principle are sometimes used for control of high frequency noise.

In future production, additional sound insulation techniques could be used to attenuate noise entering the cab through the walls, roof, and floor. On EMD locomotives, sound insulating material is placed in the electric cabinet as another measure of noise reduction.

Noise problems must not be separated from ventilation problems because noise reduction techniques cannot be fully effective as long as the windows are kept open during summer operations. In such a case, the noise sources must be modified to reduce the level of noise which enters the locomotive cab.

Vibration: Adequate measurements to describe the vibrational environment in the locomotive cab are lacking. The criteria used by the manufacturers do not include low frequency vibrations in the range where the human body is most sensitive (1-10 Hz), and apply only to static conditions when the locomotive is not running at high speeds on the track.

The conditions of vibration, to which the engineer is exposed, should be measured as a first step in surveying the environmental conditions in the cab. The measurements should record vibration parameters in the vertical, transverse and longitudinal directions during actual train operations. Recordings, both on the floor and on the seat, should be taken at various train speeds and under various track conditions, which would serve as parameters for the vibration measurements. Jerks in all three directions significantly influence the comfort of train ride. Therefore, the magnitude and occurrence of jerks must also be determined. Finally, the results of such a study must be compared with established human comfort and tolerance thresholds in order to establish riding conditions in the locomotive cab, and in order to be able to make recommendations for improvement. Better riding comfort could be envisioned by improving: (a) seat design, using appropriate dampers, (b) instituting an active damper system, and (c) if necessary, making design changes in the locomotive. Active damping systems are being considered to improve passenger comfort; they should also be considered for improving the operator's comfort.

5. SEATING OF THE OPERATOR IN LOCOMOTIVE CABS

5.1 Review of the Literature on Cab Seat Design

The German, Swiss, and Japanese railroads have developed seats exclusively for use in locomotive cabs. The seats were designed on the basis of selected anthropometric data and were intended to satisfy the unique human factors requirements of the locomotive engineer's job.

Beginning in July 1969 the German Federal Railways developed an idealized chair to be a standard locomotive seat of the 70's.(154) The seat is shown in Fig. 5.1. It is adjustable for effective vibration damping by varying the spring tension with a handwheel, which is calibrated and marked for the individual's body weight. The back of the seat reclines. Reclining was considered to be a desirable feature. Frequently the engineer has to spend several hours in the cab waiting. In order to make these waiting periods useful in the medical sense, the reclining seat back provides a more or less comfortable laying position for relaxation. Fifteen seats of the above prototype model were tested in locomotive use for fifteen months. A human factors questionnaire was distributed to the engineers who used it. The survey in which 50% of 3000 questionnaires were returned revealed two drawbacks regarding the new seat: (1) mounting the chair on the floor with an 18" diameter plate is unacceptable because it severely limits its positioning possibilities and (2) many engineers did not adjust the seat optimally to their individual body weight and anthropological dimensions because of

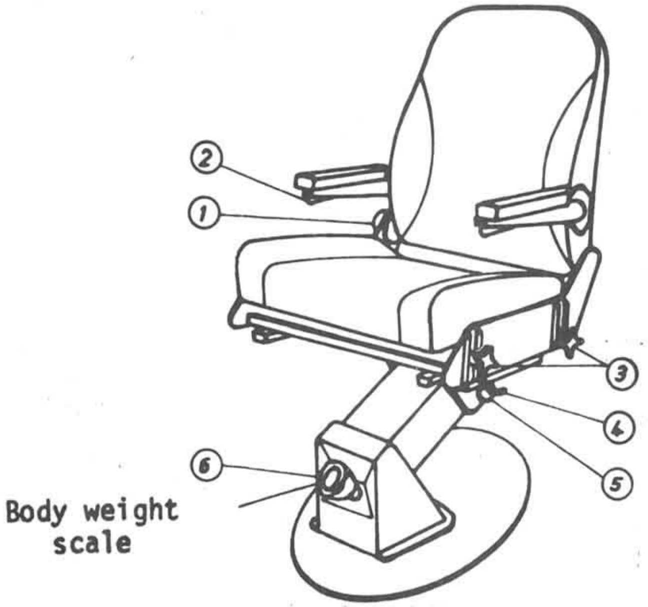

Fig. 5.1 Proposed standard seat for the German Federal Railways

1. Backrest incline adjustment
2. Arm rest adjustment
3. Seat cushion adjustment (angle and height)
4. Seating depth adjustment
5. Fixed turn position
6. Body weight adjustment

lack of adequate instructions. Other improvements, recommended in the survey, include: to extend the back rest into a head rest; height and length of the arm rest should be adjustable separately; the seat should be mounted in a track on the floor; the controller levers should be within easy reach from the chair. It was a frequent complaint that engineers when taking over the train do not have time to make all the complicated possible adjustments. Therefore, the importance of proper seat adjustments should be explained to the worker.

The Swiss Federal Railways took a different approach in developing a standard locomotive seat. Their primary criterion was that the seat should dampen vertical vibration to a considerable extent but should not hinder vigilance at the same time.(147) To find the optimal chair which best satisfies the above requirements from the human factors point of view, the acceleration level on several types of seating was measured during a series of test runs in an electric locomotive with 60 and 90 mph speed. Based upon vibration absorbing characteristics, the seat shown in Fig. 5.2 was selected as the Swiss standard. The seat spring constant is adjustable to the individual's body weight, it is suspended on a four-bar linkage mechanism which keeps the plane of the seat surface always parallel to its original position during oscillations, and vibration is further reduced by using a damping cylinder. A seat of similar construction was adapted for the fork lifts used by the Swiss Federal Railways, see Figure 5.3.

A considerable amount of human factors engineering design effort has been incorporated into the development of the engineer's seat on the

Fig. 5.2 Standard seat of the Swiss Federal Railways installed in the cab

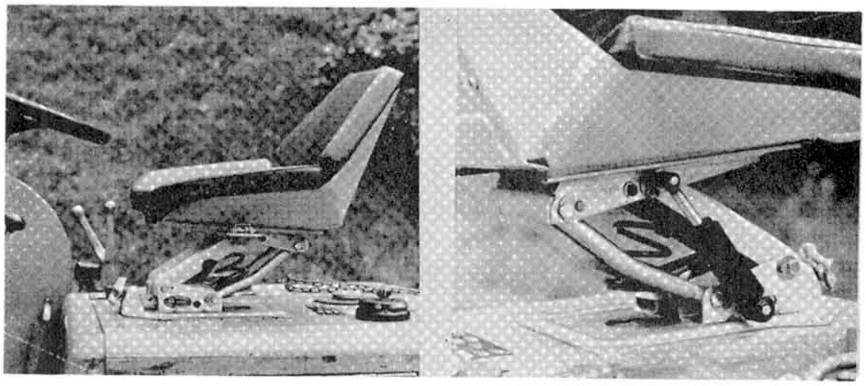

Fig. 5.3 Standard seat of the Swiss Federal Railways installed on a fork lift

high speed Tokaido Line of the Japanese National Railways. The shell shaped seating surface supports the body on both sides against transverse vibration and makes an arm rest unnecessary. The back is supported at five points: at both shoulder blades, at the ischia on both sides, and at the coccycx. The angle between the seating surface and the side of the ilium is 105 to 110°.(49)

The International Union of Railways (U.I.C.) Series 3 of Code 625, issued in 1959, recommends that the seated position of the engineer should be as high above the rail level as possible. In 1960, Series 4 was issued to cover the driver's seated position more adequately. Adjustable footrests and seats are recommended which are comfortable and collapsible to permit the driver to operate standing as well as sitting. Type 3, B_0-B_0 locomotive of the Southern Region, British Railways exemplifies the above principle. On this locomotive the seat tips back to give the engineer maximum freedom and permit standing operation.(36)

Further recommendations have been proposed for good seat construction of international European stock.(18,31,148) A free knee space of minimum 16" is recommended in front of the seat. Foot rests are necessary with a suggested 15° slope, their surface area should be about 16 x 20" with rough finish. The deadman pedal should be incorporated into the foot rest. Seat height adjustment between 16" to 19" is recommended with a 5" recline of the seating surface. The front edge of the seat cushion must be rounded. Depth of the seat is to be 16 to 20". The seat should rotate but could be fixed in any position. Height of the backrest should be adjustable and a ventilation opening should be provided in the lower part. A backrest of 16 1/2" x 17 1/2" is recommended with a 5° to 7° recline.(155)

Factors other than body size are also important to provide comfort for the seated person. For example, a major comfort factor is the distribution of body weight in the chair. This distribution is affected by the angle and the inclination of the backrest and the seat surface, by the arm rest, the foot rest and by the distance from the floor. A German report suggests that in good seat design an even distribution of body weight must be incorporated. Local concentration of pressure causes aching spots.(49) The seat should be designed so that all limbs of the engineer extend to the controls at an optimal angle and are in the least tiresome position when he operates his equipment. Seat dimensions, based on European anthropometric data, are presented by Grandjean:(51) the seat height is recommended to be 17.7 ± 4.3" with a 3" backward incline of the seating surface.

Anthropometric data on American railroad personnel are not available. The seats of American passenger cars are designed on the basis of seated body dimension data collected in 1945.(64) Seat width for passengers in a recent TRW Inc. (1970) report,(142) quoted from the same literature source, is recommended to be 20", back height 28", elbow height 8.5"; hip breadth 19.0", seat height 16.9", shoulder breadth 19". Another recent American study(129) concerning passenger comfort recognizes the fact that the driver's seat needs special design in rapid transport but faultily concludes that in the design of the operator's seat the accessibility to foot and hand controls and pedals is more important than comfort (p.141). In a good human factors design, both must have equal importance.

Japanese National Railways, however, had a special committee conduct a two year study in 1963-4 to improve riding comfort of passenger cars in regard to seat design, lighting, and air conditioning.(65) This study presents unique anthropometric data on seated Japanese male and female population, which could be advantageously utilized when applying results of Japanese human factors research to our population. As another unique approach, the study judged seating comfort according to the "finally settled posture". In other words, the seat should be comfortable for a body posture settled after a slight descent which occurs when the person has been sitting in the seat for awhile. X-ray pictures were used to determine compression of internal body organs. Seat comfort was determined by experimental subjects sitting for five continuous hours, during which motion analysis of the body was made and fatigue points were measured by vertebral examination, electromyograms of back muscles, flicker tests, anomalistic measurements and respiratory analysis. Optimal design of arm and foot rests was determined by similar techniques and the contours of first and second class seats, established on the basis of the collected data, are presented in the report.

5.2 Design of Seats on Domestic Locomotives

Each American locomotive manufacturer supplies a basic seat for the engineer and an auxiliary chair of the same design for the fireman in the cab. Optional, special order seats are available and frequently as a further option two auxiliary seats are installed in the cab. Some railroad companies specify one particular seat design which the Union may require when ordering locomotives from the manufacturer, and consequently most of their seats are alike. Design of the basic EMD and GE seats is discussed first in this chapter and examples of optional special models are presented later.

The basic EMD chair has an 18" diameter round seating surface which is tilted 5° backwards, Fig. 5.4. It rotates 360° around an axis which is 2" off the center of the circular seating cushion. Such construction is a desirable feature because the axis of seat rotation coincides with the vertical axis of the seated body. If the two axes do not coincide, the body has to move along an arc when the sitting person turns. Radius of the arc is the distance between the axes. Such motion is uncomfortable and annoying. The seat is mounted on the sidewall in sliding slots and is adjustable along the total length of the cab. Transverse adjustment is not possible. Neither the seat cushion nor the back rest provide any support against transverse vibrations and jerks. If these surfaces were curved as they are, for example, in office chairs, they could reduce fatigue especially during long train rides, by decreasing muscular work required to keep the body in erect posture on the flat surfaces and by providing lateral support.

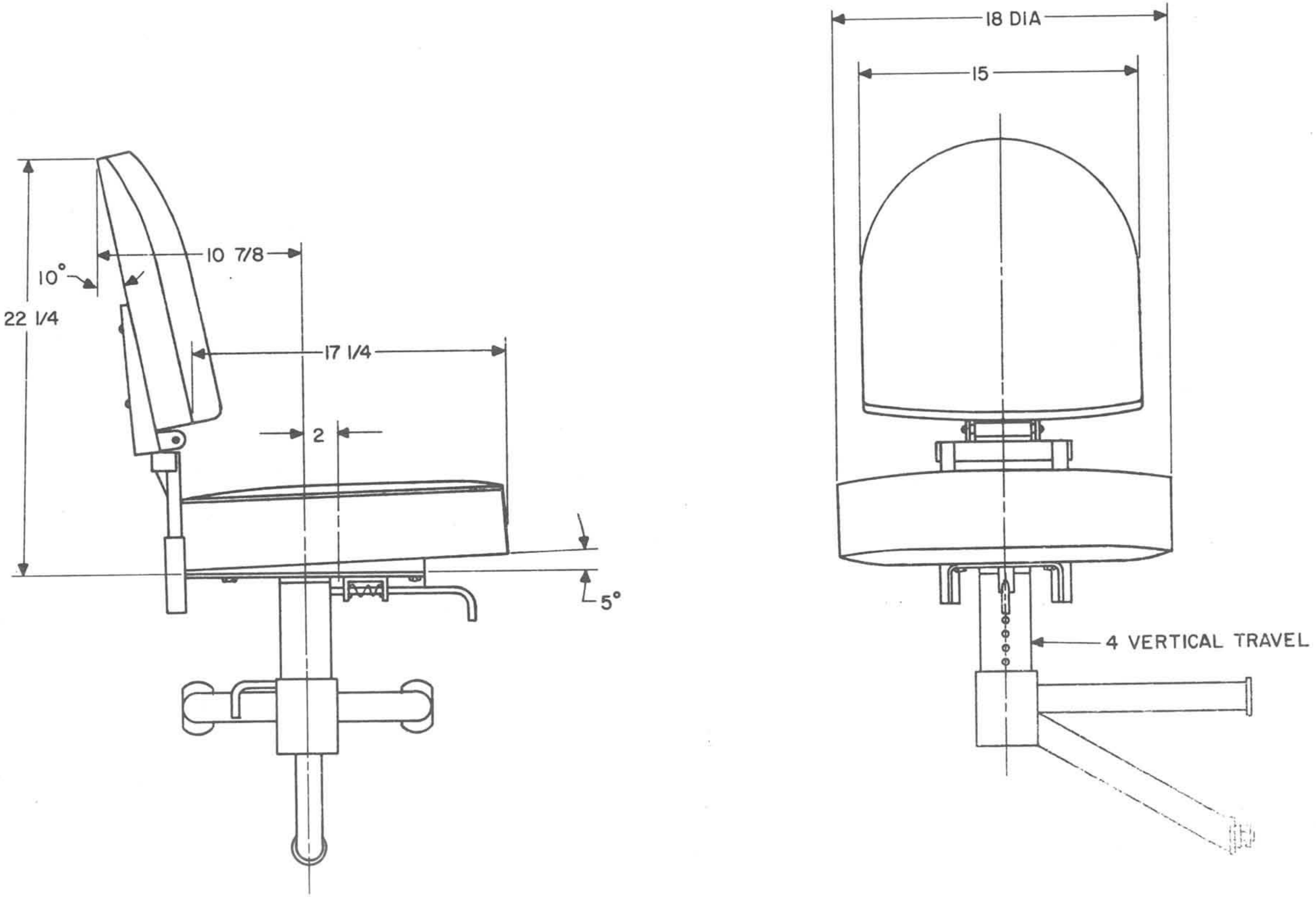

Figure 5.4 - Basic EMD Locomotive Chair

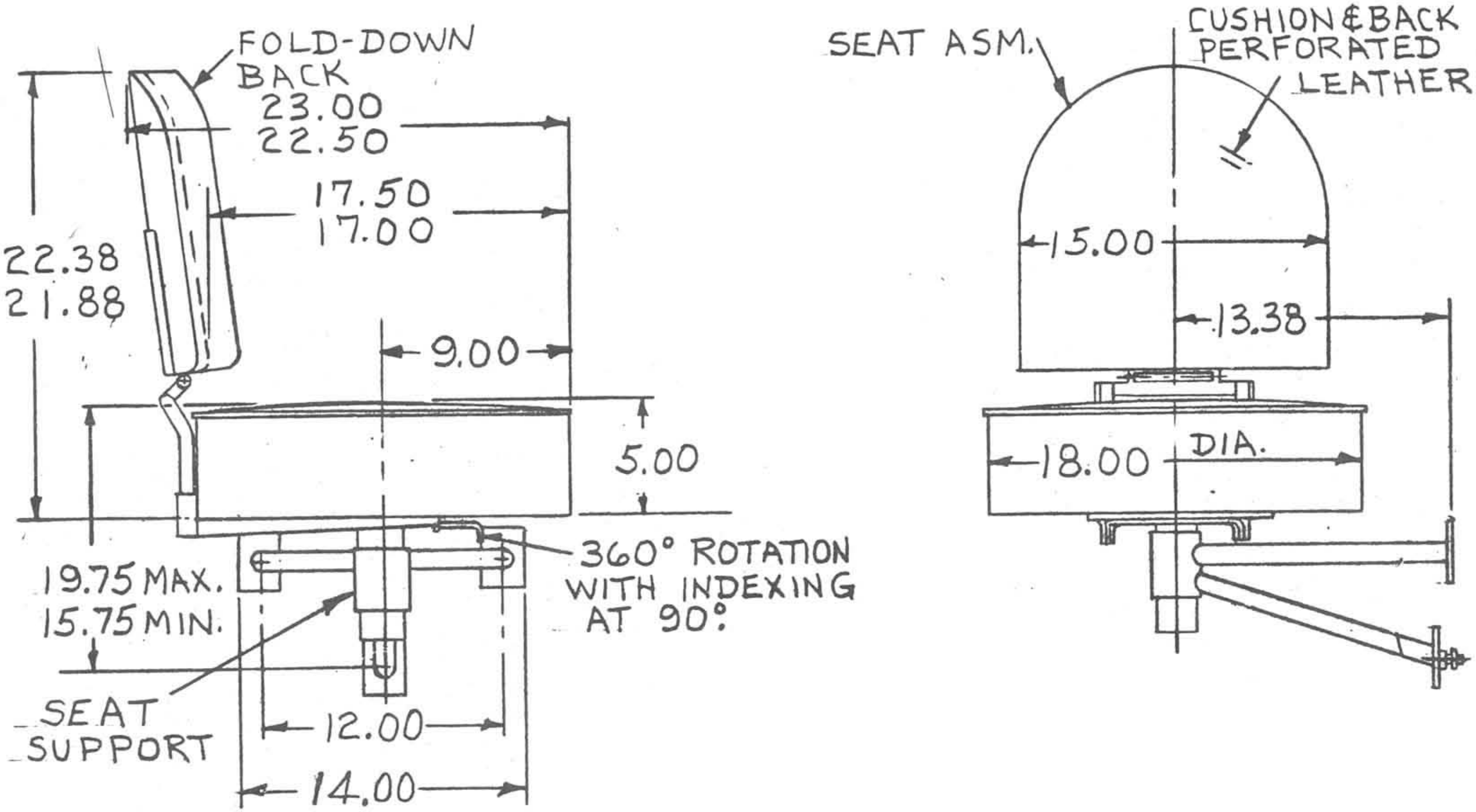

Fig. 5.5 Basic GE wall mounted sliding seat

The 18" diameter seat cushion might not be quite wide enough for locomotive engineers as a population group because 18" minimum seat width is recommended for young military personnel (33,92,156) and not for an older age group. Furthermore, the recommended seat with the minimum 18" width has a square shaped seating cushion instead of a round one which corresponds to 324 in^2 surface area vs. 254 in^2 of a round seat (28% larger). Therefore, the surface pressure resulting from body weight is correspondingly less on a square seat. The quoted recommendations are prepared for sonar, radar, and air traffic controllers who are not exposed to a dynamic environment with three dimensional vibrations and jerks, as the locomotive engineer. Their performance requirements, though, consist of similar control type functions. This difference in environment suggests further consideration for comfort of seating. The basic seat does not have arm rests. Padded, 2" wide folding arm rests would be recommended.

The basic GE seat has a similar 18" diameter round rotating seat cushion and a reclined 15" wide back rest, Fig. 5.5. This type of seat has the further disadvantage, with respect to the one discussed above, that the axis of rotation coincides with that of the seat cushion and that the seating surface is not inclined backwards. An angle between 3-5° is recommended.

EMD installs the special order arm chair, shown in Fig. 5.6, in Penn Central locomotives. This seat seems to satisfy most comfort requirements except that it has 3" vertical adjustment instead of 4" and that the contour of the seat cushion does not provide lateral support.

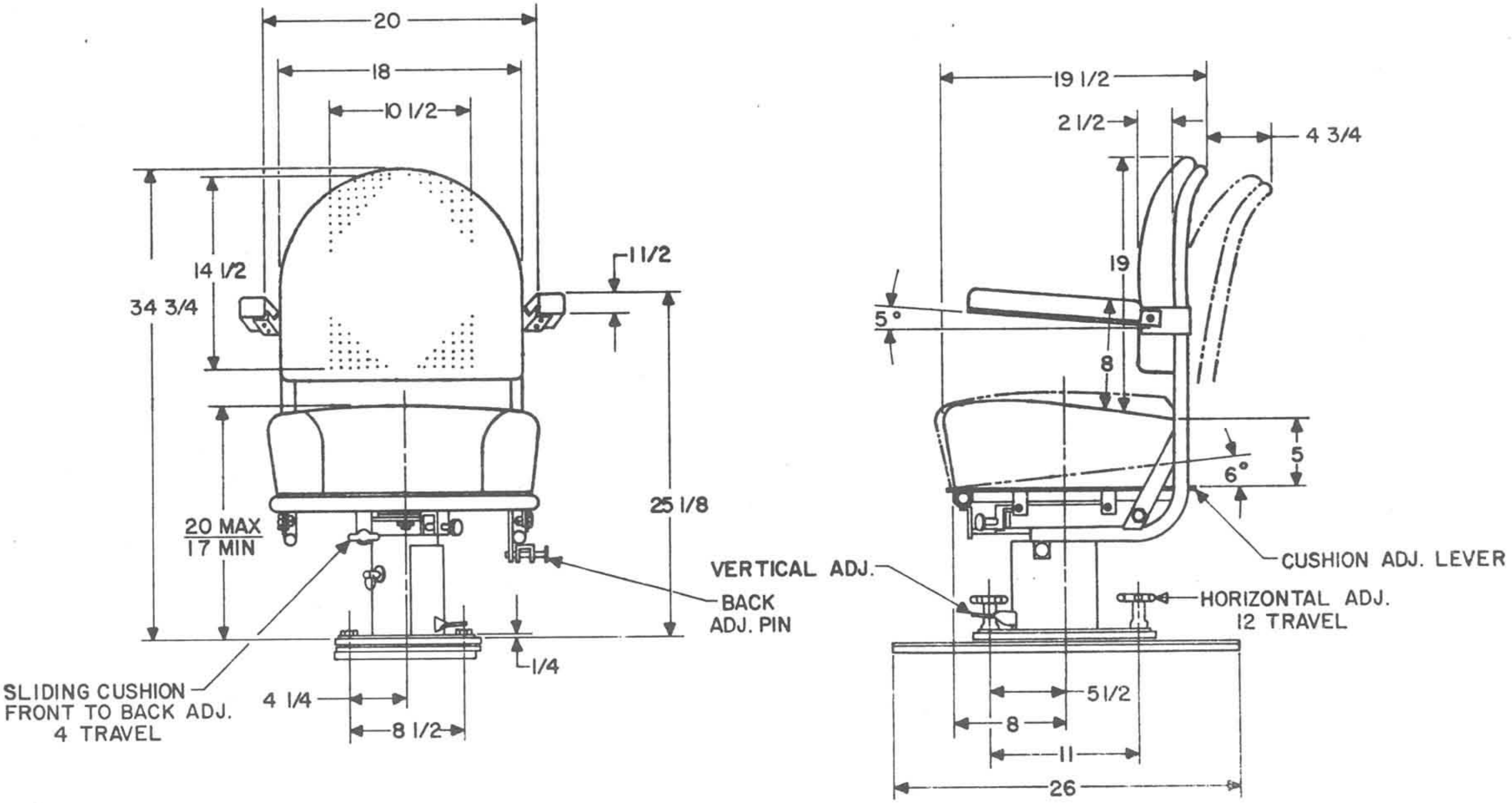

Figure 5.6 - Special EMD Chair on Penn Central Locomotives

Adjustable arm rests would be preferable. The seat provided by EMD for Southern Pacific, in Fig. 5.7, has the necessary supporting contour of the seat cushion. Vertical adjustment of this seat is 2 1/2" only. For Union Pacific, EMD supplies the seat shown in Fig. 5.8. The horizontal position of the seat cushion is adjustable 4" which shifts the axis of rotation and could be set in a comfortable position. The cushion does not provide lateral support, and the vertical adjustment is just 3". The backrest should be shorter extending from 5" to 17" above seat surface level.

The basic GE seat is available with arm rests, as shown in Fig. 5.9. The axis of rotation is shifted 1" back on this version which is a desirable feature. On certain GE locomotives a 20" wide seat is installed, as shown in Figure 5.10, which has a 6° backward tilt. The seat contour does not support laterally, there are no arm rests on this model, and vertical adjustment is 3 1/4" only. A floor mounted GE seat model is shown in Fig. 5.11. This seat has 4" vertical cushion adjustment, it is 20 ± 1/4" wide, but not contoured. Vertical adjustment is 3 1/2". The arm rests are short, 5 3/4" instead of a preferable 10".

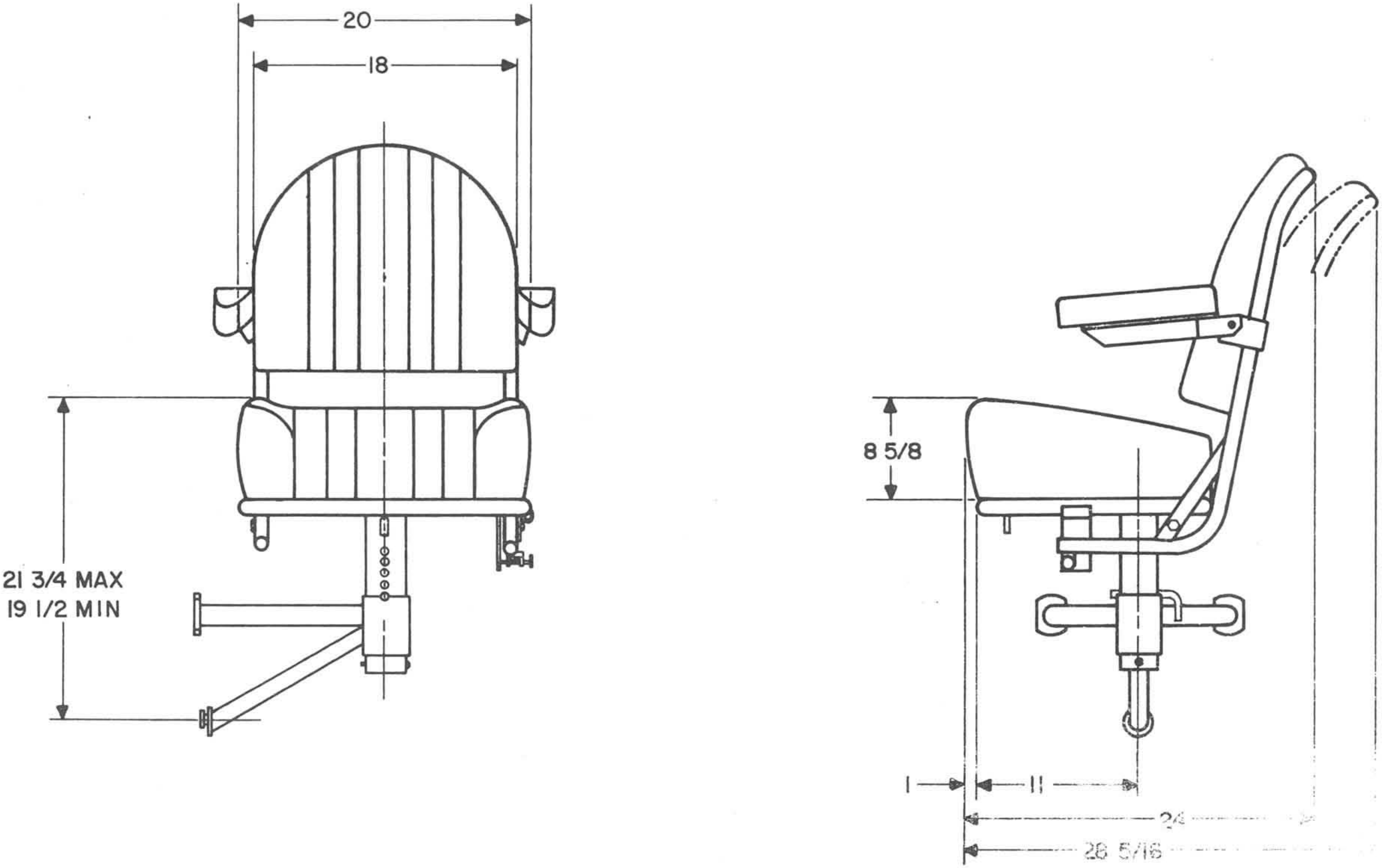

Figure 5.7 - Special EMD Chair on Southern Pacific Locomotives

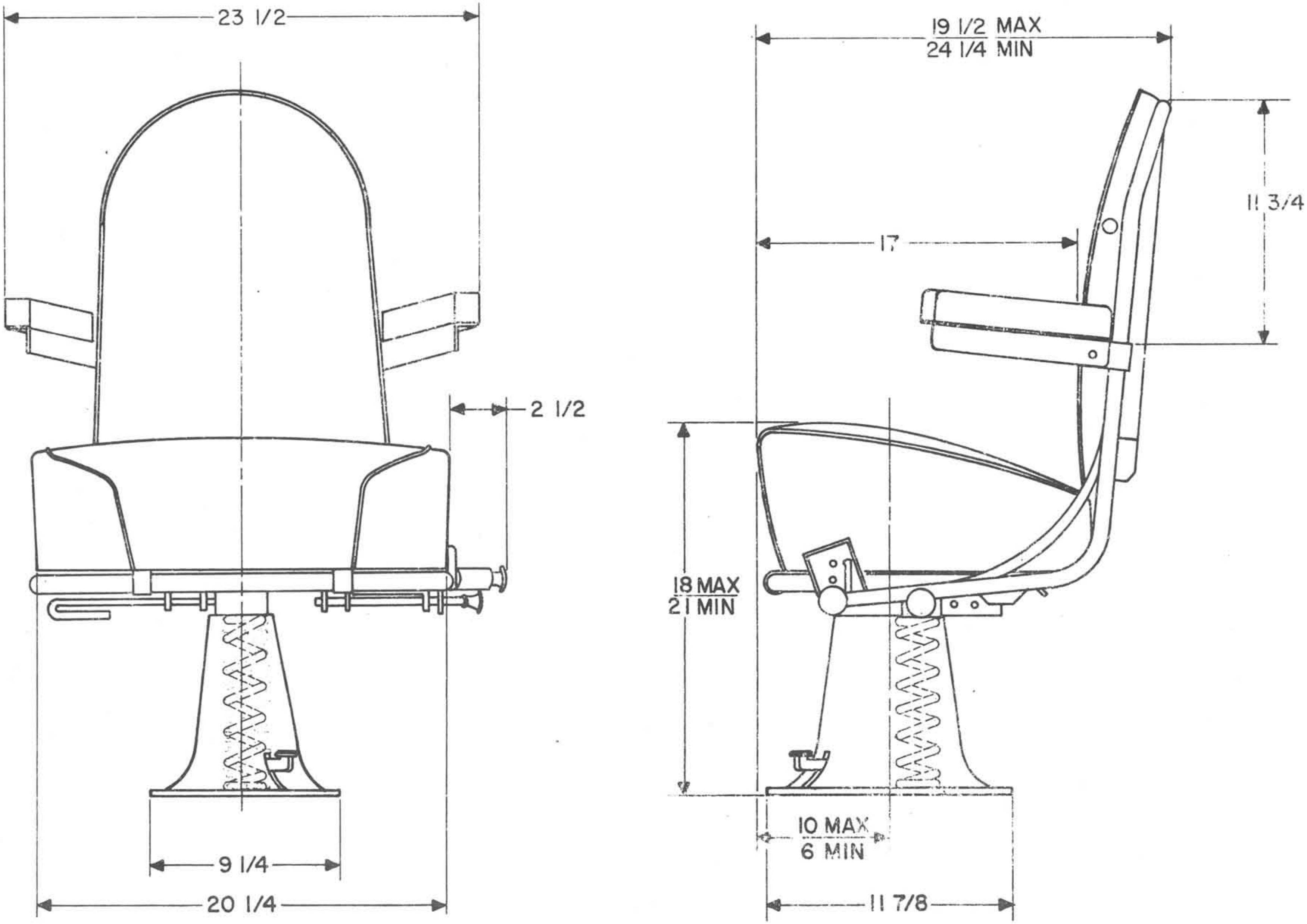

Figure 5.8 - Special EMD Chair on Union Pacific Locomotives

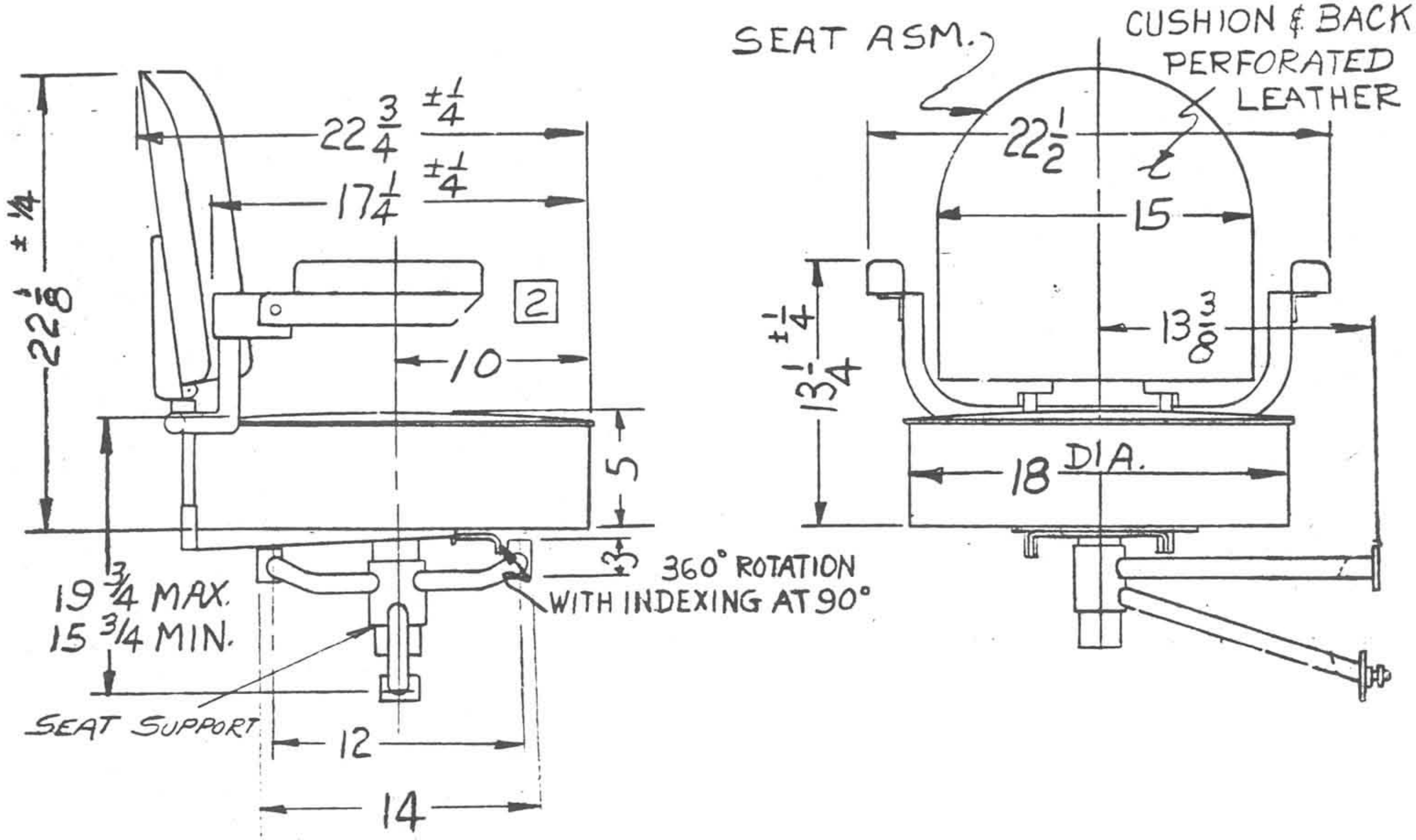

Fig. 5.9 Basic GE seat with arm rests

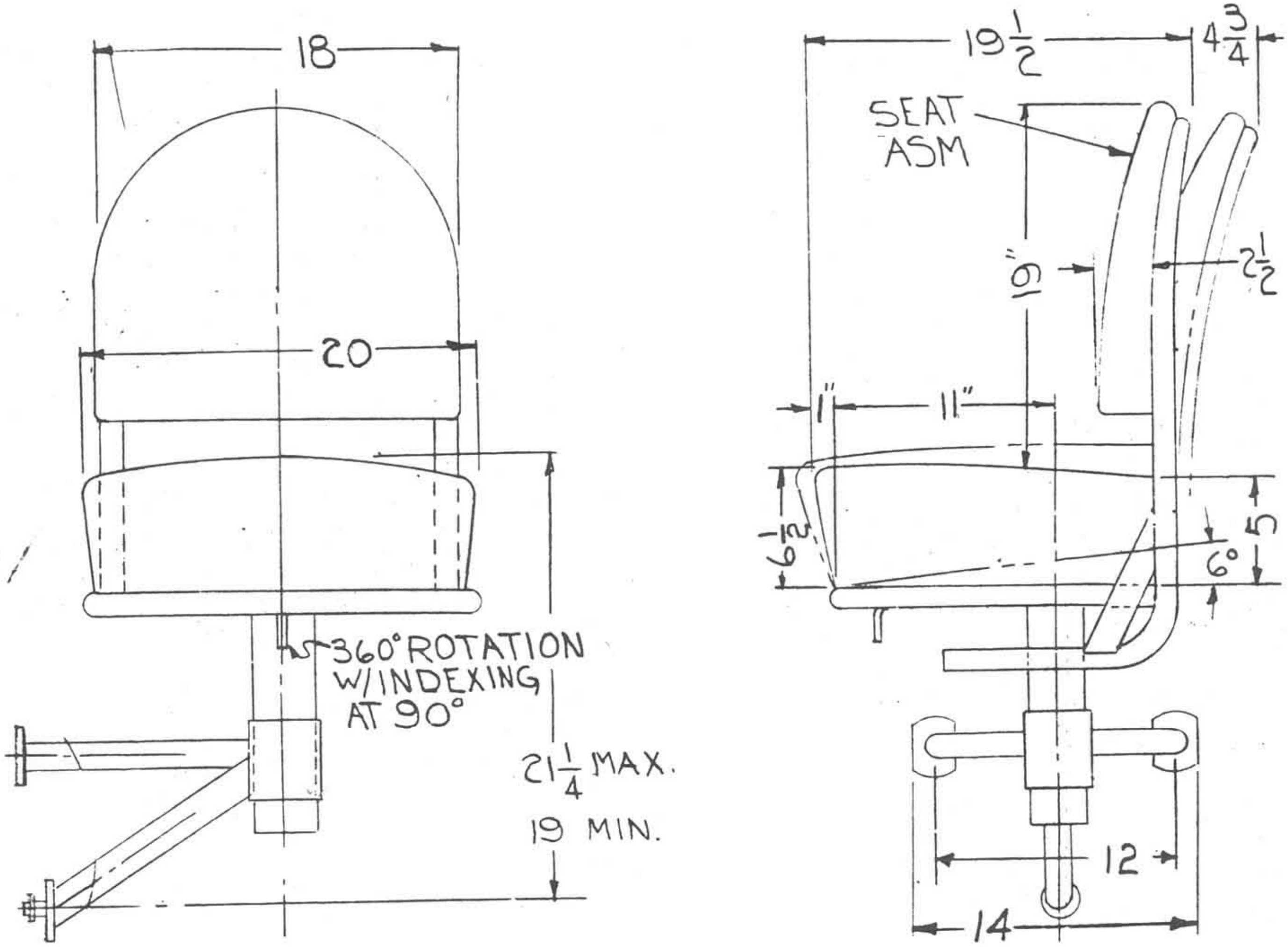

Fig. 5.10 Optional GE wall mounted sliding seat

RIGHT HAND ADJUSTABLE, 360° SWIVEL CHAIR WITH ARM RESTS, UPHOLSTERED WITH GENUINE GREEN LEATHER, VENTILATED, NYLON SEWED. CUSHION WITH COIL SPRING OVERLAID WITH 1" THICK TOPPER OF ALL NEW FOAMED RUBBER

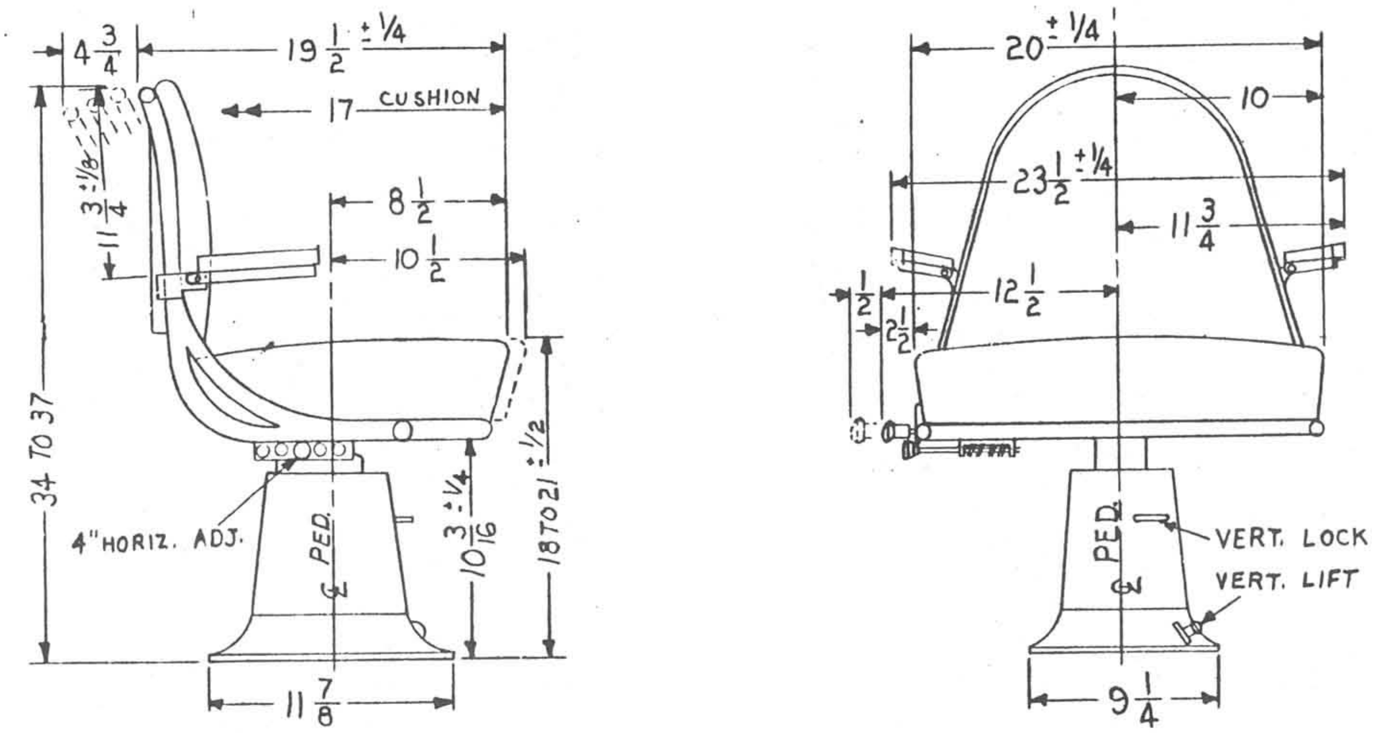

Fig. 5.11 Optional GE, floor mounted seat with arm rests

5.3 Recommendations on Seat Design

(1) It is recommended as a first step for improving seating of the locomotive engineer, that a better design be adopted as standard instead of the present basic model. The models shown in Figs. 5.6 and 5.7 are more suitable to provide comfort and reduce fatigue in a locomotive cab environment than the presently used basic chair types.

(2) Advantages found separately in different models could be combined. For example, horizontal adjustment of the back rest, as shown in Fig. 5.8, should be provided for a chair with a contoured seat cushion, resembling the model in Fig. 5.7. Of course, 4" vertical travel and folding adjustable arm rests are also recommended.

(3) An appropriate foot rest should be designed. A piece of pipe, as found on GE models, is not adequate. EMD models do not have any foot rest, and the engineer has to place his feet on the heater in front of the chair, if he wants to occupy a relaxed position (see Fig. 2.25). Further investigation should determine, on the basis of an analysis of the control functions performed by the engineer on domestic type control stands, whether the foot rest should be an integral part of the seat or a separate unit on the floor. An inclined floor in front of the seat is another possible alternative solution.

(4) Based upon comparative evaluation of locomotive seats presently in use and on an estimation of task and control functions required of the engineer, the seat shown in Fig. 5.12 is recommended as a first approach in designing a standard locomotive chair. The seat was developed to aid sonar operators and helps to stabilize the man's body as the ship

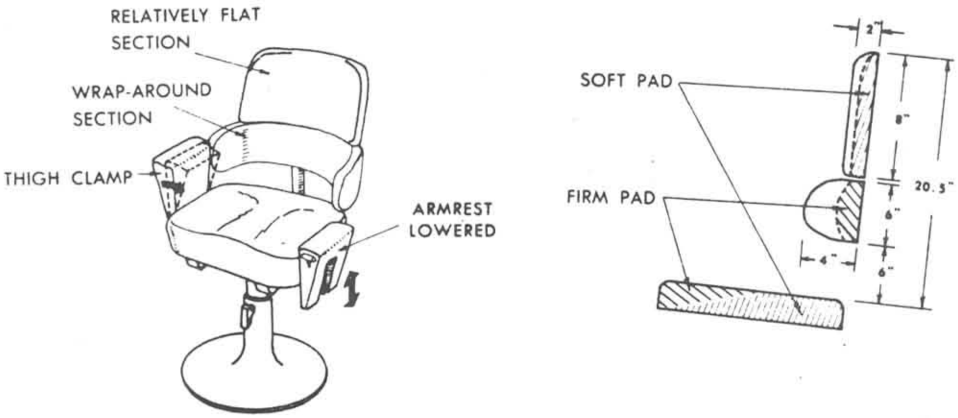

Fig. 5.12 Seat for sonar operators which could be adopted for use on locomotives

pitches and rolls in medium to heavy seas.(156) The backrest provides not only more surface area, but adds an additional curved section about the operator's lower rib. The arm rests pivot inward to act as a "tight clamp". However for locomotive use, a different design for the arm rests is recommended; the arm rests should swivel outward, so that they do not restrict the engineer if he must leave the chair.

(5) As a final solution, a standard seat must be designed specifically for locomotive engineers. This new design must optimally satisfy both the work space requirements determined by need to operate controls, etc., and the comfort requirements of the individual regarding reduction of vibrations and providing lateral support. The methods and techniques of seat development have been described. (72,127) The research should first determine the user population, secondly establish acceptable standards of reach and comfort, and thirdly apply these standards to all but the exceptionally large or small members of the user population (upper 95 and lower 5 percentile).

The user population must be identified in terms of the distributions of both height and weight. The designers of the seat have first to identify critical body dimensions and then design a prototype model in which each dimension can be adjusted independently over a wide range. In such a prototype seat, the seating surface, backrest, arm rests, and foot rest would be adjustable independently of each other. The initial settings of the chair would be found by placing it in a locomotive cab and adjusting each dimension until a user of average size can carry out each of the engineer's task functions without difficulty and discomfort. The optimum would be achieved by interrogation of the subject. The final dimensions will be determined on the basis of the optimum for the average man and on the anthropometric data of the user population.

Differences in body size and proportion among different occupational groups are common. Numerous factors contribute to the physical differences, such as age, diet, health status, and physical activity. There also appear to be selective factors tending to make certain occupational groups more homogeneous physically than would be expected by chance. Some tasks require specific physical abilities (48) and workers having this ability tend to be similar in physique; jobs may require or attract distinctive personalities, etc.

Percentiles of anthropometric data provide a basis for estimating the proportion of a group accommodated or inconvenienced by any specific design. For example, to provide for 95 percent of civilian population in respect to weight, a truck seat should be designed for 215 pounds per civilian driver, and 192 pounds per Army driver. A seat supporting only 150 pounds per driver would be inadequate for some 70 percent of civilians and 55 percent of soldiers.(33) Percentiles permit the selection and accurate use of test subjects. A critical body dimension or physical ability of a test subject can be readily located as a percentile of the relevant population--provided, of course, that the population in question has been measured. Groups within the population vary less than the population as a whole. The limits of the 90 or 95 percent range must be determined by actual measurements of samples from the group to be accommodated. It cannot be automatically assumed that there is a similarity of any group of operators to other groups or to the "general population".

Data are available to cover the major military and civilian groups for which equipment is designed. If any group of intended users is likely to differ from the series in respect to age, sex, race, or occupation the specialized data must be obtained through appropriate sampling of the group. Therefore, certain anthropometric data must be collected on the locomotive engineers as a population group. It is anticipated that four major body dimensions shown in Fig. 5.13 would be required together with body weight and height data to design a good chair. The minimum number in the group should be 100, recommended by Damon(33), to obtain statistically significant data. By using height and weight data only and deducing other dimensions from these measurements, one introduces a 20 percent error.

The test subjects should not merely hold a comfortable position, but should perform all necessary functions for the duration of an actual operation. Many difficulties may be noted immediately but others become apparent only with time. For example, a cramped space around the knee is tolerable for several minutes, but over the course of hours can become not merely uncomfortable but dangerous. Immobility of the lower legs over such periods has caused blood clots in the calf veins.

The seat must be designed on the basis of evaluation of the foreign seat models and the domestic anthropometric data. Review of the literature shows that several models of good seating have been developed, such as the

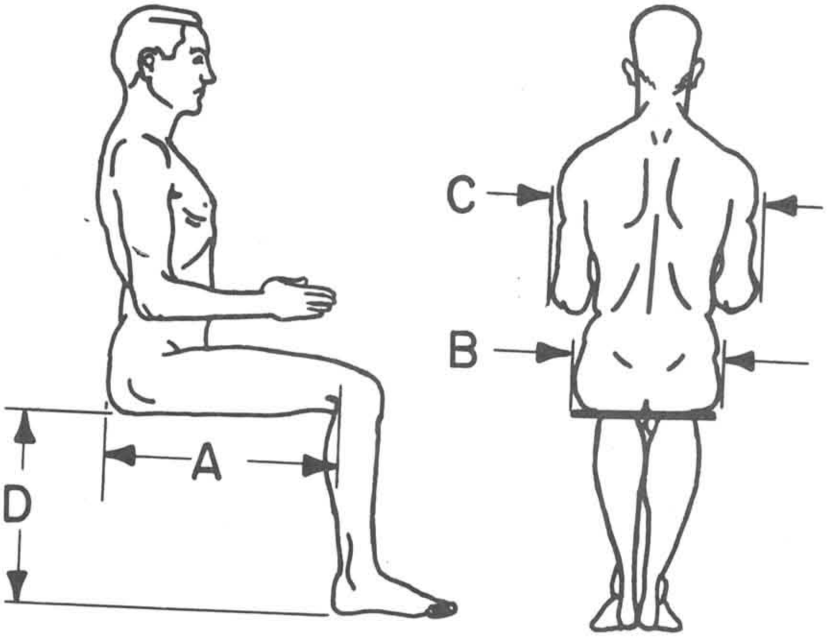

Fig. 5.13 Anthropometric dimensions to be collected on locomotive engineers for good seat design

German Swiss and Japanese locomotive seats.(49,147,154) It would be advantageous to test a sample of these models on the domestic railroads and examine their advantages and disadvantages for American use. Such experience could aid in developing the ideal standard seat.

As a final step, the seat should be intalled experimentally on several locomotives and tested in use. The engineers should be instructed on proper use and adjustments of the chair. Design evaluation would be based on both interview with the users and on a human factors questionnaire on seat comfort.

6. PHYSIOLOGY AND VIGILANCE REQUIREMENTS OF TRAIN DRIVING

6.1 Review of the Literature

The problem of decrease in vigilance and onset of inattentiveness in locomotive engineers has led to the adoption in railroad operations of vigilance devices which brake the train when the operator fails to make certain responses. Adequate performance of the irrelevant task required by the vigilance device is taken as evidence that he is performing the relevant task efficiently even though taking no overt action in that respect. These devices are extensively used in railroading to test the attentiveness of engineers.

Barwell distinguished two classes of these devices on the basis of the nature of the irrelevant response: (1) Continuous devices, as exemplified by the deadman pedal, require a continuous response; in this case, depression of the pedal, whereas (2) intermittent devices require discrete responses to prescribed signals.(7)

Vigilance of locomotive engineers was found to be significantly influenced by (1) duration of operation (especially during long intervals between signals or bad visibility), (2) climate and monotonous cab noise (require suitable cab design), (3) irregular cycles of shift (shifts begin and end at all hours of the day and night).(10) In railroad operations, vigilance lasts only for two to four hours without simulation by the second driver. Independent driving should not exceed three to four hours. The individual's twenty-four hour rhythm of sleep and vigilance is broken into irregular fractions and synchronization between the brain cortex and autonomic nervous system, and hence body temperature, pulse frequency and blood pressure are found to be disturbed. These factors are related to mental blocks during operation of the train, which may be tested, for example, during the second night of driving. The engineer starts the evening already in a trophotropic stage, which imperils his vigilance. Based upon these tests, it is possible to estimate synchronization of autonomic rhythms with the cortical function of the man, as it affects vigilant driving and to make suggestions concerning optimal cycling of shift work.(10)

Considerable research effort has been devoted by military and academic teams to the understanding of fatigue and vigilance, but little of the results can be applied directly to railway operation because locomotive problems differ from those in important respects. Grant presents a summarizing review of fatigue and vigilance problems in railroad operations.(52) The engineer's attentiveness varies and tends to decline after a period of one to three hours of uninterrupted driving. Railway engineers perform little or no heavy physical work. Therefore, it is not of primary importance to know the total amount of physical energy expended during a run or a shift. It is more appropriate to regard the man as a skilled information-processor than as a transformer of energy. One of his main tasks is to take in information from the environment and to decide whether and how to act. Social and other factors such as motivation, organizational responsibilities, family life and even eating and drinking habits do influence performance; but these are best treated as the background to behavior on the job.

As physiological parameters of the engineer's performance, several factors have been investigated: vigilance skills are usually categorized into "monitoring" and "tracking" tasks. Vigilance requirements in train driving present special cases of each, and further demands which are not measurable in either of these terms. The train driver moves along a fixed track and does not "steer" the train, yet his input consists of a continuous and often rapid stream of signals, the color or aspect of which he must detect (monitoring). His objective might be seen as having to keep the needle of his speedometer in a steady position (tracking). In addition, the driver has to perceive abnormal, unexpected events and contingencies on the track, such as obstacles, and track maintenance personnel, presenting problems of visual discrimination and acuity. The problem is that the man is physically not very active, nevertheless his vigilance performance deteriorates with time spent on the job.(52) Various attempts to measure this stress have been undertaken and of particular interest has been the method involving the biochemical analysis of the metabolites.

For most of the time, once a certain speed is attained, his main objective is to do nothing but watch for the rare exception to the normal. Unreadiness to act has been given as the main characteristic of the kind of fatigue as stated by Grandjean: (50) "It is contended that the fatigue of drivers arises, not from overload of the human system, but from underload or monotony and boredom due to inaction, combined with stress." Fortunately, the railway situation is unlike the typical radar watch situation in which there is complete temporal uncertainty about the appearance of signals; there are possibilities of control to reduce such uncertainty.

If underloading of the driver's information system is a factor in the development of fatigue, it might appear that the "vigilance device" at present in use would be sufficient to provide additional loading. While this is no doubt a useful adjunct, it does not altogether overcome the effect of adaptation to a monotonous environment. Vast stretches of unchanging landscape may present an additional problem. In addition to the possibly monotonous environment outside, the conditions of heat, noise, smell and vibrations inside the cab increase monotony.(52)

Neurophysiological investigations, for instance, have demonstrated the existence of "micro-lapses" of attention or states of "micro-sleep", which are not noticed by the person concerned.(53) As far as is known, these lapses are of relatively brief duration, say, a few seconds. It is more than likely that such attention-gaps are accompanied, or even preceded a few seconds earlier, by some fine behavioral events. A reduction in frequency of involuntary eye movements and of the palpebral fissure (though not necessarily complete blinks) are possible clues

A comparative study assesses the effectiveness of four different vigilance devices.(23) A continuous response was required with a deadman handle, and three forms of intermittent devices were used to provide a secondary task, while the experimental subjects performed a primary task resembling railway signal monitoring. The effectiveness of the secondary tasks was assessed by noting the extent to which deterioration in their performance preceded deterioration on the primary task. The intermittent devices provided (1) a buzzer signal at regular intervals, (2) auditory signals at fixed intervals before presentation of the primary task, and (3) two different auditory signals before the primary task, indicating if action was needed or not. The results show that as far as the deadman pedal is concerned, the tension in the postural muscles cannot be used as an indicator of perceptual vigilance. The results for the intermittent devices indicate that performance on auditory monitoring tasks cannot be used as an indicator of visual tasks, required in railroad operations. Thus, the vigilance devices do not necessarily indicate the state of alertness. However, the results show at the same time, that a vigilance device can have an effect upon the course of performance change in the primary task: performance deteriorated at a constant rate with the application of one of the intermittent devices. The study concludes that certain vigilance devices, including the deadman pedal, are ineffective as predictors of inattentiveness, but that some of them could compensate in some extent for this inadequacy by reducing deterioration rate in performance. The evidence indicates that close scrutiny is essential in evaluating these devices.

The arrangement of deadman equipment restricts the driver's position in many cases and can lead to cramp and unnecessary fidgeting to relieve this condition. A hand-button to obviate the continuous use of the foot-threadle could be introduced with advantage.(36) The disadvantage of the so-called deadman's pedal is discussed by Schwab:(125) when the engineer is seated and starts the train it is necessary for him to press down on this metal pedal on the floor with his right foot and keep this pedal depressed until he brings the train to a stop. In the study of muscular fatigue, it is well known that continuous contraction of muscle produces fatigue earlier than alternative contraction of muscles. Continual contraction of a muscle produces interference with the normal blood circulating through the muscles and this causes cramps, pain and, sooner or later, makes it necessary to partially release the muscle. In the case of foot pressure against a pedal, it is possible by rotating the foot from side to side to release some of the continued contraction that causes disagreeable symptoms. However, this makes the contact with the pedal somewhat unstable and produces, in the mind of the operator, a certain amount of concern and anxiety lest his foot slip off the pedal during this kind of movement and rotation. If his foot comes off the pedal in such automatic types of brake control, emergency air will be put on, stopping the train suddenly. For operation where the intervals between stations are under 10 minutes, such as on subways, etc., it is not difficult to maintain efficient continuous pressure for this period of time, but in the case of the single unit trains the interval of time between stops may be as long as 50 to 60 minutes. In the case of this trip there was one uninterrupted run of 55 minutes. In elderly subjects the vascular supply of the foot muscle may be sclerotic and, therefore, more sensitive to continuous pressure, interfering with normal circulation. Such individuals feel the cold more keenly in their feet than younger ones and in winter this continual pressure in the presence of a cold floor, which is inevitable in cold winter weather, makes the problem increasingly more complicated.

Improvement of the deadman control is reported by combining it with automatic supervision of vigilance of the engineer.(131) This system considerably increases safety or railroad operation, can be installed on any kind of traction vehicle, and can be combined with other safety and protective devices.

It is recommended that in designing vigilance devices, a soothing sound should be used for the routine signal and a loud warning for emergency.(36) An alert driver rarely permits the latter to function and should be spared its annoying call.

Research was performed to determine the effect of an external audio signal on visual monitoring performance and any associated changes in physiological parameters of the subjects.(85) The number of correct detections, the number of commissive errors, skin temperature, and skin resistance were recorded throughout the experiment. A two-way nested analysis of variance correlated application of the audio signal to vigilance decrement. Multiple correlation analyses of the data indicated a high degree of complex interaction between the physiological parameters measured and the vigilance detection decrement.

The engineer's workload was measured with physiological techniques in high-speed electric locomotive operation of the Tokaido Line in Japan.(56,57,58,59) Heart rate (HR) was continuously recorded to assess nervous work load. However, HR is greatly affected by muscular strains and heat stresses. Therefore, in order to obviate such effects, other measurements were also taken: such as respiration, palmar skin resistance (PSR) and myogram, flicker fusion frequency and measured the excretion of adrenalin, noradrenalin and steroid hormones in the urine.

The aim was to determine whether there is any functional relation between the nervous strain required in performing a job and the change in the physical phenomena. However, there being no objective measure to indicate the degree of nervous strain, the only possible way of ascertaining this relationship was to check it with empirical phenomena. Thus, measurements were taken of the physical reactions (mainly HR and PSR) of drivers of a large-type bus, run under certain driving conditions at changing speeds, and were used in determining the above relations: from the physical phenomena the nervous strain of a motorman engaged in high-speed train operation on the New Tokaido Line of Japanese National Railways was appraised. The investigation established that the engineer's nervous strain depends on the running speed. The increase of heart rate, the decrease in palmar skin resistance are also found to correspond to the increase in speed. However, the physical work load is dependent not only on speed, but on the road conditions, particularly the traffic volume and obstacles.

Physiological indices were successfully used to assess the stress level of two occupational groups: in thirty engineers of diesel locomotives and in thirty dispatchers at stations with heavy traffic before, during and after shift.(152) Stress was assessed according to the neurosensory demand, physical efforts, working conditions and work organization. Rapid changes in the conditions, intensive direct activity and the necessity for quick and various adaptive reactions affect the organism, especially the nervous system and analysers, depending on the train type and the shift.

Fatigue was studied by EEG, electro-dermograph (EDG), and by eosinophil count in locomotive engineers during train accelerations after long and exhausting runs as well as after a day's rest.(35) Before the run, EEG was normal; immediately after it, the spontaneous tracing showed a slight dysrhythmia, increased amplitude and incidence of rhythm, slow response to external stimuli, and exaggerated changes caused by hyperpnea. EDG was rendered labile in 75% of the examined engineers, and was blocked in 25% of them. Eosinophil count diminished 40-50% after a long run. From the results, it can be concluded that, in spite of the reversibility of the fatigue phenomena, EEG changes may become permanent, and that the pathological changes induced by fatigue are dangerous in view of the high responsibility of locomotive engineers. Recording electrical biopotentials in professions like these may provide valuable information.

Both physiological parameters (coordination, circulation) and psychological factors (memory, vigilance, topographical memory) were investigated in 21 traffic controllers as signs of overstress.(70) The coordination tests showed that those factors which can be controlled by will underwent insignificant changes; this was the case also with the circulatory tests conducted with the subject in the standing position. Typical occupationally-induced stresses were clearly reflected in the psychological tests. The results obtained provided the basis for a new work program which was applied with satisfactory results. Lantin investigated the effects of irregular sleeping patterns and work scheduled on performance of locomotive engineers.(82) Another study emphasizes the importance of good human engineering design of locomotive cabs in reducing the operator's work load.(105) The electrical and mechanical activity of the heart of three work groups: track workers, switching locomotive engineers, and office workers was investigated for the Polish Railways.(16) Age range of each group varied between 45 to 50 years, with 10 years or more in railroad service. EKG and polycardiographic measurements were taken. Systolic time intervals as well as arterial wall elasticity were analyzed. The results do not reveal differences between the groups, except for the time of mechanical systole which is found to be significant by longer in the group of track workers.

Another investigation is reported which attempted to find a correlation between heart-rate of locomotive engineers and railroad operations.(12) In the case study of an elderly railroad engineer, driving passenger diesel trains, several factors were observed which contributed to fatigue and build-up of stress:(125)

- the lack of auditory stimuli that ordinarily occurs with the presence of a fireman in the cab;
- the dead man's pedal, which requires positive pressure with the foot against a spring and produces in a normal person intense muscular fatigue after a 10 minute interval. In that particular run, the longest time which the pedal had to be kept pressed down was 55 minutes. There was no way to shift this pedal to the other foot or relieve it by hand control;
- the bicycle-type seat on which the engineer sat was not adjustable and tended, if the engineer should faint, to throw him forward into a

slumped position with his full weight on the safety pedal;

- at night, there were a large number of disagreeable reflections from passing lights which entered the cab from the sides;

- in addition to close inspection of the track ahead, the engineer had to watch speed zone limits, an internal set of block signal lights in the cab, two air pressure gauges. These three distractions in his peripheral field made attention directly ahead more difficult.

Foret reviews the working and living conditions of locomotive engineers in main line train operations.(45) The daily workload of signalmen was investigated in the Dutch Railways. The study measured the energy expenditure of the signalman, included time and job analyses, and measured force requirements to operate switches.(17) Pulse frequency was continuously recorded, work tasks were analyzed with multi-exposure photographs. Certain switches required excessive force to operate. Short duration, peak work requirements amount to medium workload only, but summation of an eight-hour shift corresponds to heavy physical labor. If more than 160 switching operations are required within an hour, duration of a shift is recommended to be no more than six hours. No difference between day shift and night shift operations was found in the individual's physiological response to the workload.

Prolonged driving and sleep deprivation change the pattern of usual eye movements.(73) The study covered nine hours of driving following normal sleep and again following 24 hours without sleep. Eye movements were recorded at six intervals during driving. Eye movement patterns shifted closer to the car and to the right of the road. Dispersion of eye movements also increased. Pursuit eye movements appear to be a sensitive index of driver fatigue.

A comparative study investigated changes in color sensitivity of the engineer on noise-intensive diesel engines and on electric rapid transit motor coaches of the Berlin city railway.(21) Color vision was not found to be dependent on sound pressure level. However, under conditions of different working hours and simultaneous noise stress, the color vision was found to be dependent. After a 12-hour shift in the cab of a diesel locomotive with high noise level, high stress level could clearly be observed, especially after night duty. The results suggest that duration of working hours should be limited for locomotive engineers in order to prevent any fatigue and change in sensitivity with regard to color perception.

Color perception changes and could be a contributing factor to accidents.(75) Starting from a concrete case, the paper describes the alteration and related functions of the eye. Its role in every day life is significant in industry, in traffic and in the work of the oculist, in connection with examination of color vision. An anomaloscope method (instrument for detection of color blindness) is described which is simple, quick, and eliminates the possibility of errors originating from alteration of the eye. It would be necessary that drivers of rapid transportation systems should know the phenomenon of alteration and dangers which in certain circumstances can originate by that. Nystagmus, observed in locomotive engineers, used to be considered an occupational disease, as is the case with the miner's nystagmus which results from a constrained position working in a twisted position on one side of the body.(60,61) However, there are indications to the contrary and probably other uncleared forms of nystagmus and the physiological phenomenon of optlocikinetic nystagmus are being confused. In countries where railway boards provide for a regular supervision of health as do the French State Railways, the Swiss Federal Railways and the German Federal Railways, no pathological changes have been observed with railway men enough to justify the assumption that it is an occupational disease.

Black reviewed the applicability of contact lenses in the railroad industry.(15) The industry could be divided into four main categories in this respect: the executive level, office personnel, the maintenance group, and the group actually in transport. It is concluded that contact lenses may not produce as good visual acui'ty as spectacles, and cause moments of discomfort no matter how many years the lenses have been worn. They have utility in that they can be substituted for spectacles, thus may be of aid to morale. They have more value than spectacles in case of a few special eye problems.

There are attempts to consider occupational hazards in the locomotive engineer's job: possible correlation was investigated between the death rates of physically active and sedentary employees of the railroad industry.(137) Another health aspect, coronary heart disease, was also investigated in selected occupations of domestic railroads in relation to physical activity.(138)

6.2 Vigilance Devices on Domestic Locomotives and Recommendations

The dead man pedal is widely used on domestic locomotives as a vigilance device. Its function is to brake the train in case the engineer fails to operate the pedal within certain predetermined intervals. No industry-wide standard exists to specify use, location and constructional specifications of the device. Accordingly, locomotive manufacturers furnish the dead man pedal in cabs as optional equipment, and many different designs can be found in use. Some railroad companies do not use dead man pedals at all. Where it is used, the location, size and force requirements of the pedal vary greatly among the individual railroads and the different models. However, a fairly universal trend can be observed on new switcher locomotives: the pedal is made of a long pipe extending along the full length of the control stand and pivoted at the two ends. This construction gives mobility to the engineer by permitting him to operate the pedal from any position in the vicinity of the control stand. (See Fig. 2.32).

The proposed standard control stands of AAR and Canadian National Railways do not specify design criteria for the dead man pedal. The size, location and force requirement must meet the operator's body dimensions and should not need excessive physical energy expenditure to operate.

Further research in the area of vigilance devices is essentially needed. As a first step, it must be determined what physiological measures should be used in future systems. Past and present experience with dead man pedal-type vigilance devices indicates that a muscular response requiring considerable physical effort is not desirable, could be easily circumvented, and does not exclude the possibility of continued activation in case of an accident. Application of a hand-operated vigilance device could be an acceptable alternative. However, a completely new concept presently under consideration, such as building physiological transducers into the engineer's chair to monitor certain body functions, could be the optimal final solution. Certain types of seat transducers have been in use for several years and have been found unsatisfactory by some carriers. Less expensive measures, such as sensors or traditional-type activation devices built into the throttle and/or brake lever, could possibly also be used advantageously.

BIBLIOGRAPHY

1. Abe, S., Optimal allocation and optimal long-range investment policy of safety devices in railways, Tokvo Railwav Technical Research Instruction-Ouarterlv Report, 1964, 5, 46-9.

2. Acord, F. D., Modern locomotive and freight car design, Proqressive Railroading, 1971, 31-8.

3. Afonina, O. A., The economics of noise control (in Russian), Masinostroitel, 1969, 5, 33-4.

4. Alston, L. L., Birkby, R. B., Developments in train control on British railways, Paper presented to Institution of Railway Signal Engineers, London (October 13, 1971), Railway Gazette, 1971.

5. Association of American Railroads - American Railway Engineers Association, Joint Committee on Relations Between Track and Equipment, Passenger ride comfort on curved track, Area Bulletin, 1954, 51.

6. Association of American Railroads, AAR proposed standard diesel locomotive control stand, Report of Committee on Electrical Equipment-Rolling Stock, Docket No.EE-30,19-21. Updated in AAR Circular No. DV1768, May 22, 1972.

7. Barwell, F. T., Safety and automation on electric and diesel motor power units, Bull. Int. Rly. Congr. Ass., 1962, 39, 952-70.

8. Batchelor, G. H., Determination of vehicle riding properties, Four part article published in Railway Gazette, Part I, July 20, 69-72; Part II, July 27, 97-100; Part III, August 3, 129-131, Part IV, August 10, 158-160,164, 1962.

9. Battigelli, M. C. et al., Environmental and clinical investigation of workmen exposed to diesel exhaust in railroad engine houses, Industrial Medicine, 1964, 33, 121-4.

10. Bena, E., Noskova, M., and Poche, V., Use of body temperature, biorhythms, pulse frequency, blood pressure, and Achilles tendon threshold for evaluation of the dearee of viqilance during train driving (in German), Proceedinqs of a Symposium on Ergonomics in Machine Design, IL6, Geneva, 1969, 1, 291-300.

11. Berry, J. C., Colbeck, L., Some problems associated with the man-machine interface for driving high speed railway trains, Int. Symposium on Man-Machine Systems, 1969, 2, Transport Systems and Vehicle Control IEEE #69C58-MMS.

12. Bestwater, G., H. John, R. Timm, The problems of interpreting heart-rate measurements in engine drivers (in German), 4th International Congress on Ergonomics, Strassbourg, France, 1968.

13. Betzhold, C., Effect of air sound attenuation on inside noise of railcars (in German), Glasers Annalen, 1963, 4, 207-10.

14. Black, B. J., Contact lenses and the railroad industry, Industrial Medicine and Surgery, 1965, 632-35.

15. Bobin, E. V., Reduction of industrial vibration in railroad transportation (in Russian), Edition Transport, Moscow, 1967.

16. Bolechowski, F., and I. Gustowska, Simultaneous examinations of heart electrical and mechanical activity of employees of the polish state railways working in line construction and shunting operations (in German), Verkehrsmedizin und Ihre Grenzgebiete, 1970, 17/8-9, 366-75.

17. Bosman, J., G. D. Jansen, and J. K. T. Oudenaller, Examinations of the work burden of a signalman of the signalbox Zwolle Post III (in German), Verkehrsmedizin und Ihre Grenzgebiete, 1970, 17/8-9, 353-365.

18. Braitsch, H., The seat-car comes finally; the seating and standing compartment in rapid transit cars (in German), Verkehr und Technik, 1970, 113-17.

19. British Standard, Specification for electric lamps for railway signalling, 1960, #469.

20. Broschmann, D., Some comments concerning the form perception of stop lights, (in German), Verkehrsmedizin und Ihre Grenzgebiete, 1970, 17/6, 260-70.

21. Broschmann, D., and U. Harms, On changes in the color vision of the staff of railroad locomotives in relation to working hours and type of vehicle, (in German), Verkehrsmedizin und Ihre Grenzgebiete, 1970, 17, 387-91.

22. Buck, L., Errors in perception of railway signals, Ergonomics, 1963, 6, 181-92.

36. Diesel Railway Traction, Driver's Cab, 1963, 17, 274-80.

37. Dietrich, C. W. et al., High Speed Ground Transportation: Noise Sources, Bolt Beranek and Newman, Inc., Cambridge, Massachusetts, 1968, 52.

38. Dunlap, J. W., Utility of human engineering as applied to vehicle design, SAE Trans., 1968, 76, 154.

39. Eck, H. C., The Modern Locomotive Handbook, Railway Fuel and Operating Officers Association, Chicago, Illinois, 1972.

40. Engineer, Diesel electric locomotive control, 1964, 217, 452-3

41. Engineer, Locomotive driver's safety device, 1964, 218, 925.

42. Engineer, Standardising locomotive driving controls in France, 1965, 220, 320-1.

43. Engineer, Hand signal misinterpreted, Stechford Rail Collision Report, 1968, 225, 836.

44. Fischer, K., Radio-telephone for railroads and local traffic (in German), Glasers Annalen, 1970, 94, 387-93.

45. Foret, J., The working and living conditions of mainline train drivers (in French), 4th International Congress on Ergonomics, Strassbourg, France, 1968.

46. Fukushima, H., and M. Tsuchiya, All transistorized cab signalling system (in Japanese with English summary), Nat Tech Report, 1963, 9, 481-90.

47. Gebhard, J. W., Acceleration and comfort in public ground transportation; U. S. Government Research and Development Reports, Abstract PB 190 402.

48. Gibson, J. D., Railway training and education - permanent way instruction, Brit. Tech. Ind., 1968, 157-62.

49. Gorlitz, F., The driver's position on railway locomotives as an example of a workplace of particular significance for occupational health in transport (in German), Arbeitsmedizin-Sozialmedizin-Arbeitshygiene, 1970, 5/6, 135-8.

50. Grandjean, E., Fatigue (in German), Etude de la Fatigue, Union Internationale des Services Medicaux des Chemins de Fer, Brussels, 1965, 174-89.

51. Grandjean, E., *Physiological Work Posture* (in German), Ott: Thun and Munich, 1967.

52. Grant, J. Sharp. Concepts of fatigue and vigilance in relation to railway operation, *Ergonomics*, 1971, 14, 111-18.

53. Haider, M., Vigilance performance, vigilance lapses, and their neurophysiological correlation (in German), *Etude de la Fatigue*, Internationale des Services Medicaux des Chemins de Fer, Brussels, 1965, 279-86.

54. Hanes, R. M., *Human Sensitivity to Whole-Body Vibration in Urban Transportation Systems: A Literature Review*, John Hopkins University Applied Physics Lab., 1970, TRD-43, TPR 004, PE 192 257.

55. Hartwig, H., Development of railroad medicine in Germany (in German), *Verkehrsmedizin und Ihre Grenzgebiete*, 1960, 16, 435-58.

56. Hashimoto, K., et al., A study of the physiological loading of a large-type bus operation., Report of the Institute for Railway Labour Science, 1962, 15, 39.

57. Hashimoto, K., et al., Physiological strain and fatigue of the high speed electric car's operation on the New Tokaido line, Report of the Institute for Railway Labour Science, 1964, 16, 1.

58. Hashimoto, K., Estimation of the driver's workload in high speed electric car operation, *Japanese National Railways*, Tokyo, Japan, 1964.

59. Hashimoto, K., Estimation of the driver's workload in high-speed electric car operation on the new Tokaido line in Japan, Proceedings of Second International Congress on Ergonomics, Taylor and Francis, London, 1964, 464-69.

60. Heinsius, E., Optical problems in the man-machine system (in German), *Arztliche Dienst DB*, 1963, 24, 325.

61. Heinsius, E., The railroad nystagmus - a physiological phenomenon, (in German), *Verkehrsmedizin und Ihre Grenzgebiete*, 1970, 17/8-9, 402-4.

62. Hillborn, E. H., *Handbook of Engineering Psychology*, Tad, Inc. Cambridge, Massachusetts, 1965.

63. Hirschwehr, E., G. Urbanek, Noise investigations of railroad vehicles (in German), *Glasers Annalen*, 1967, 91, 12-20.

64. Hooten, W. A., *A Survey in Seating*, Heywood-Wakefield Company, Gardner, Massachusetts, 1945.

65. Hoshi, A., Ergonomic improvement of railcar seats, Japanese Railway Engineering, 1965, 3, 22-25.

66. Howes, D. M., Railway operator states his signalling needs, Engineer, 1969, 227, 87.

67. Hughes Aircraft Company, Literature Survey on the Command Control of High-Speed Ground Oriented Transportation System, PB 170561, 1966.

68. Hurley, F. J., Railroad Research Field Testing Program, Progress Report No. 1, Melpar, Inc., Falls Church, Va., 1968, 215.

69. International Railway Journal, Equipment for the seventies, 1969, 29-43.

70. Ioanid, C. et al., Occupational, physiological, and psychological investigations on traffic controllers at a railway marshalling yard (in Rumanian), Igiena, 1969, 18/11, 663-9.

71. Jane's World Railways, Train control project, London, 1970-71, 317.

72. Jones, J. C., Methods and results of seating research in Grandjean, E. (ed), Sitting Posture, Taylor and Francis, London, 1969.

73. Kaluger, N. A., Driver eye-movement patterns under conditions of prolonged driving and sleep deprivation, Report, Department of Industrial Engineering, Ohio State University, Columbus, Ohio, 1969.

74. Keller, B., Safety first - 1980 model, Progressive Railroading, 1969, 35-6.

75. Kettesy, A., The changeability of the colour-sense and its consequences to traffic accidents (in German), Verkehrsmedizin und Ihre Grenzgebiete, 1970, 17/8-9, 392-401.

76. Koffman, J. L., Assessment of locomotive nolse, Gas & Oil Power, 1965, 61, 72-5.

77. Koffman, J. L., Comfort qualities of pullman coaches, Railway Gazette, 1967, 123, 17-20.

78. Koffman, J. L., and Jeffs, D. C., Reducing noise from locomotive cooling fans, Railway Gazette, 1969, 123, 229-32.

79. Kopszyk-Myszion, T., and H. Surewicz-Szewczyk, Sanitary aspects of the working place on motive power units (in German), Verkehrsmedizin und Ihre Grenzgebiete, 1970, 17/1, 10-19.

80. Krasovskiy, G. A., Automation in railroad operations, Avtomatika, Telemekhanika i Svyaz, Moscow, 1966, 4, 8-11, Translation: Clearinghouse for Fed. Sci. Tech. Info. TT 66-32638.

81. Kup, W., and Lessing, C., Significance in transportation medicine of differential noise susceptibility as related to age in diesel engineers (in German), Verkehrsmedizin und Ihre Grenzgebiete, 1966 13, 147-60.

82. Lantin, G., Sleep and irregular work schedules in train drivers (in French), 4th International Congress on Ergonomics, Strassbourg, France, 1968.

83. Lindberg, V., J. I. McNabb, Reflectorized bulb improves crossing signal, Railway Signalling and Communications, 1967, 60, 28-30.

84. Mannchen, K., Problems of equipping the hearing protecting devices of workers on noise intensive permanent way engines of the German Railways with an individual radio warning device (in German), Verkehrsmedizin und Ihre Grenzgebiete, 1970, 17/2, 51-7.

85. Marshall, W. S., The effect of an external audio signal on vigilance performance and physiological parameters, U. S. Government Research and Development Reports (Report No. AD-709-088).

86. Masaki, H. and H. Tanaka, Visual range of signal lights, Railway Tech Research Inst - Quarterly Report, 1963, 4, 67-71.

87. Mashhour, M., The effect of motion on attention in man-machine systems, International Review of Applied Psychology, 1969, 18/2, 111-18.

88. Matsudaira, T., Safety and ride-comfort of high-speed railway cars, Quarterly Report, Japan National Railway, Special Issue, 1960, 13-19.

89. Matsudiara, T., Dynamics of high speed rolling stock, Quarterly Report of the Japanese National Railways, Special Issue on the New Tokaido Line, 1964.

90. Mechanical Power, French Railways' Type 68,000 Locomotives, 1963, 59, 255-7.

91. Menkes, L. C., How tone signals can be used in controls, Railway Signaling and Comnunications, 1966, 59, 36, 40-3.

92. Military Standard 1472A, Human engineering design criteria for military systems, equipment, and facilities, 1971.

93. Morgan, C. T. (ed), Human Engineering Guide to Equipment Design, New York, McGraw-Hill, 1963.

94. National Transportation Safety Board Signals and Operating Rules as Causal Factors in Train Accidents, Report No. NTSB-RSS-71-3, Washington, D. C., 1971.

95. Nock, O. S., Signalling from the driver's point of view, Railway Magazine, 1969, 115, 263-7.

96. Nouvion, F. F., Design of new motive power for ease of driving and maintenance, Conference on Performance of Electrical Railways, Inst. Elect. Eng. Conf., Publ. No. 50, Pt. 1, London, 1968, 298-344.

97. Nowakowski, B., Zasady higiency pracy w przemysle (in Polish), Warsaw, 1963.

98. O.R.E. Committee, Reports No. 8 and 9, Noise abatement on diesel locomotives, Office for Research and Experiments, International Union of Railways, Oudenoord 8, Utrecht, Holland.

99. Ogilry, H. H., Automatic train control, Control, 1966, 231-33.

100. Osbon, W. O., and T. H. Putman, Engineering Design Study of Active Ride Stabilizer for the Department of Transportation's High-Speed' Test Cars, Westinghouse Research Labs, Pittsburgh, Pa, 1969, PB 185 008.

101. Parsons-Brinckerhoff-Tudor-Bechtel , Acoustics Studies, 1968, PB 179 353.

102. Paul, Igor L. and Erich K. Bender, Active Vibration Isolation and Active Vehicle Suspension, Massachusetts Institute of Technology, Cambridge, Massachusetts, 1966, PB 173 648.

103. Penn Central Post, 250 times stronger than safety glass, 1972, 7.

104. Perczel, J., Body posture of drivers of city transit vehicles (in German), Proceedings of Second International Congress on Ergonomics, Taylor and Francis, London, 1964, 371-6.

105. Perczel, J., Reduction of the locomotive engineer's work load by means of a new cab design conception (in French), Travail Humain, 1966, 29, 157.

106. Pfannkuch, H., Illumination equipment of the electric multi-unit train (in German), Elektrische Bahnen, 1969, 40, 265-9.

107. Pfeiffer, G., The effect of scattering light in windscreens upon the perception of objects on the roadway (in German), Zeitschrift fur Verkehrssicherheit, 1970, 12, 132-9.

108. Pinkepank, J. A., Diesel Spotter's Guide, Kalmback Publishing Company, Milwaukee, Wisconsin, 1967.

109. Prohl, G., and U. Sauer, Examination of noise stress on diesel engines V 180 and V 200 (in German), Verkehrsmedizin und Ihre Grenzgebiete, 1970, 17/8-9, 405-17.

110. Prohl, G., and U. Sauer, Examination of noise stress on diesel engine attendants (in German), Verkehrsmedizin und Ihre Grenzgebiete, 1970, 17/10, 423-7.

111. Railway Age, Burlington installs new wayside and cab signaling, 1954, 136, 54-6.

112. Railway Gazette, Personnel performance appraisals, 1957, 107, 274-6.

113. Railway Gazette, Cab signalling and radio-telephony in marshalling yards, 1964, 120, 403-4.

114. Railway Gazette, British railways signalbox to control 28 route-miles, 1964, 120, 811-14.

115. Railway Gazette, Power signalbox at Rugby, 1965, 121, 27-31.

116. Railway Gazette, BR train control makes progress, November, 1971.

117. Railway Gazette International, Metcalfe patent EBC/5 fail safe electro pneumatic brake, 1971, 19.

118. Railway Signaling and Communications, Pushbutton console for CTC, 1959, 52, 17-20.

119. Railway Signaling and Communications, Individual radios carried by crewmen can aid yard work, 1964, 57, 25-6.

120. Railway Systems Control, Change proposed for signal rule, 1970, 28, 24-5.

121. Robinson, J. E. et al., Field maintenance interface between human engineering and maintainability engineering, Human Factors, 1970, 12, 253-9.

122. Scholz, W., Human factors design of rapid transit trains (in German), Aerztliche Oienst, 1970, 31, 154-155.

123. Scholz, W., Proceedings of the XIIIth Congress of International Union of Railway Physicians (UIMC) (in German), Aerztliche Dienst, 1970, 31, 147-50.

124. Schuh, E., Design and interior equipment of car of urban rapid transit system in Munich, West Germany (in German), Elektrische Bahnen, 1969, 40, 271-4.

125. Schwab, R. S., Factors in fatigue and stress in the operation of high-speed passenger railway cars with only one driver present, Ergonomics, 1957, 1, 84-90.

126. Secretary of Transportation, Third Report on the High Speed Ground Transportation Act of 1965, 1965, PB 185 702.

127. Searle, J. A., The cab mock-up method of determining the layout of commercial vehicle cabs, Motor Industry Research Association Automotive Research Publications, 1969/6 Lindley, England.

128. Shunichi, Abe, Optimal allocation and optimal long-range investment policy of safety devices in railways, Quarterly Reports, 1964, 5(1), 46-9.

129. Solomon, K. et al., Journal of Urban Transportation Corporation: Passenger Psychological Dynamics, 1968, PB 188 886.

130. Smith, W. T., Zirkel, P. R., Configuration and Technical Characteristics of Typical Foreign and Domestic Locomotives, U. S. Army Aberdeen Research and Development Center, Aberdeen Proving Grounds, Maryland, 1969, AD 858 393.

131. Steiner, B., Automatic safety and vigilance control system for railroad locomotives and motor coaches, AIEE, 1962, 81, 173-6.

132. Sulkin, M. A., et al., Frontiers of Technology Study: Volume I, North American Rockwell Corporation, 1968, PB 178 270.

133. Sulkin, M. A. et al., Frontiers of Technology Study: Volume III - Implementation, North American Rockwell Corporation, 1968, PB 178 272.

134.' Suzuki, S. et al., Human engineering research on the centralized traffic control systems, Japanese Journal of Ergonomics, 1969, 5/4, 257-65.

135. SysteMed, Inc., A study of human factors affecting the safety of railroad operations, Contract DOT-FR-00004, 1970.

136. Systems Consultants, Inc., The sound environment in locomotive cabs, Addendum to Report No. FRA-RP-71-1, 1971 PB 202 669.

137. Taylor, H. L. et al., Death rates among physically active and sedentary employees of the railroad industry, American Journal of Public Health, 1962, 52, 1697-707.

138. Taylor, H. L., Coronary heart disease in selected occupations of American railroads in relation to physical activity, Circulation, 1969, 40, 1202.

139. Thorley, G. F. and G. O. B. Clarke, Work study and its application to motive power activities, J. Instn. Loco. Eng., 1961-62, 51, 256-328.

140. Thorley, W. G. F., Traffic-oriented training for locomotive engineers, J. Instn. Loco. Eng., 1968-69, 58, 305-84.

141. Trogneux, M, Cauchois, G., Characteristics and development of luminous railroad signals for day and night (in French), Soc. Francaise des Electriciens - Bull., 1962, 3, 417-30.

142. TRW, High Speed Rail Systems: High Speed Ground Transportation Systems Engineering Study, 1970, PB 192 506.

143. Uhl, K. W., Analysis and physiological evaluation of technically attainable flash forms of traffic signals with a point light source (in German), Scientific and Technical Aerospace Reports No. N70-10177.

144. Urabe, S.., and Y. Nomura. Evaluation of train riding comfort under various decelerations, Railway Technical Research Instruction - Quarterly Report, 1964, 5, 28-34.

145. Van Rijn, W., Contribution toward evaluation of acoustic comfort in railway passenger stock, International Railway Congress Association - Monthly Bulletin, 1966, 43, 1357-72.

146. Volkov, A. M., Attenuation of noise and vibration in rolling stock (in Russian), Vses. izdat.-poligr. obedinenie, Moscow, 1961.

147. Von Serati, A., Design of the driver's seat on locomotives and fork lifts of the Swiss Federal Railways (in German), Ergonomics, 1969, 12, 262-68.

148. Wainwright, D., BR's new seating science, Modern Railways, 1969, 401-3.

149. Waller, J. A., The role of alcohol in fatal collisions with trains, Northwest Medicine, 1968, 852-56.

150. Walters, D., Annoyance due to railway noise in residential areas, Architectural Psychology, RIBA Publications, London, 1970, 56-61.

151. Warnaka, G. E., Interior noise reduction in rail vehicles, ASME, Paper 69, Vibr-64 for meeting of Mar 30-Apr 2 1969, 8.

152. Wassilewa, W., Nervous and sensory strain in the activity of engine drivers and station inspectors, Proceedings of a Symposium on Ergonomics in Machine Design jointly organised by the Czechoslovak Medical Society J. E. Purkyne and ILO, Prague, 1967, ILO, Geneva, 1969, 1, 405-10.

153. Wiksten, C. L., Signals in rails given to motorman, Railway Signaling and Communications, 1967, 60, 13-17.

154. Wittgens, H., The engineer's cab on railroad locomotives: human factors and work physiological aspects (in German), Aerztliche Dienst, 1970, 31, 150-4.

155. Wittgens, H., Optimization of the engineer's cab on railroad locomotives (in German), Ausarbeitung des Internationalen Verbandes des Bahnaerztliche Dienste, Int. Union of Railways, 1970.

156. Woodson, W. E. and D. W. Conover, Human Engineering Guide for Equipment Designers, University of California Press, 1970.

157. Zavyalov, B. A. Control computer on railways, "man-machine" system, Proceedings of the 2nd International Conference, ISA, Menton, France, 1969, 2, 243-9.

158. Zboralski, D., Permissible noise levels in vehicle construction and operation (in German), Bundesbahn, 1957, 31, 486-501.

159. Zboralski, D., Noise intensity and sound sensitivity in railroad noise (in German), Eisenbahntechnische Rundschau, 1960, 9, 165-76.

160. Zboralski, D., Reduction of diesel engine noise on locomotives (in German), Motortechnische Zeifschrift, 1960, 21, 271-5.

161. Zboralski, D., Audibility of acoustic signals on switcher diesel locomotives (in German), Glasers Annalen, 1961, 85, 359-67.