FRA/ORD - 80/74

PB81 113714

METROLINER TRUCK IMPROVEMENT PROGRAM

SEPTEMBER 1980

FINAL REPORT

Document is available to the public through the
National Technical Information Service,
Springfield, Virginia 22161.

Prepared for

U.S. DEPARTMENT OF TRANSPORTATION
FEDERAL RAILROAD ADMINISTRATION
OFFICE OF PASSENGER SYSTEMS
WASHINGTON, D.C. 20590

Technical Report Documentation Page

1. Report No.
FRA/ORD 80/74

2. Government Accession No.

3. Recipient's Catalog No.

4. Title and Subtitle
Metroliner Truck Improvement Program

5. Report Date
September 1980

6. Performing Organization Code

7. Author(s)
Robert M. Seely

8. Performing Organization Report No.

9. Performing Organization Name and Address
GSI Engineering Division
General Steel Industries, Inc.
8400 Midland Blvd.
St. Louis, Missouri 63114

10. Work Unit No. (TRAIS)

11. Contract or Grant No.
DOT-FR-64237

12. Sponsoring Agency Name and Address
U. S. Department of Transportation
Federal Railroad Administration (RRD-20)
400 Seventh St., S.W.
Washington, D. C. 20590

13. Type of Report and Period Covered
Program Final Report
June 1976 - July 1977

14. Sponsoring Agency Code

15. Supplementary Notes

16. Abstract

This report summarizes the results of design and ride testing procedures followed in developing a Metroliner Truck Improvement Program. The Metroliner cars had been used in high speed Corridor service for nearly ten years and upgrading the truck suspension to modern standards for improved passenger ride was considered to be very desirable. Preliminary design projections indicated this could be accomplished at comparatively modest cost and with potential savings in maintenance costs by modifications only to the primary and secondary spring systems.

One carset of trucks was modified for use of all steel equalizer springs in the primary suspension and Sumiride bolster diaphragm type air springs in the secondary suspension at the Amtrak Wilmington shops. Ride tests were conducted and it was found that best ride improvement was obtained with a minimum of damping, both vertically and laterally.

A second series of tests were conducted using Firestone 4-ply double convolution type air springs, however, ride improvement was not as great as with the Sumiride springs.

Comparative test ride data was also collected, analyzed and evaluated by means of several ride quality criteria methods by Ensco, Inc. under contract supporting the FRA-Office of Passenger Systems. This information is covered in FRA/ORD Report 78-31, Volumes I, II and III.

17. Key Words
Improved Metroliner truck design, Road Tests, Ride Quality, Sumiride and Firestone Air springs

18. Distribution Statement
Document is available to the U.S. public through the National Technical Information Service, Springfield, VA 22161

19. Security Classif. (of this report)
Unclassified

20. Security Classif. (of this page)
Unclassified

21. No. of Pages
65

22. Price

Form DOT F 1700.7 (8-72)

Reproduction of completed page authorized

METRIC CONVERSION FACTORS

Approximate Conversions to Metric Measures

LENGTH

Symbol	When You Know	Multiply by	To Find	Symbol
in	inches	*2.5	centimeters	cm
ft	feet	30	centimeters	cm
yd	yards	0.9	meters	m
mi	miles	1.6	kilometers	km

AREA

Symbol	When You Know	Multiply by	To Find	Symbol
in^2	square inches	6.5	square centimeters	cm^2
ft^2	square feet	0.09	square meters	m^2
yd^2	square yards	0.8	square meters	m^2
mi^2	square miles	2.6	square kilometers	km^2
	acres	0.4	hectares	ha

MASS (weight)

Symbol	When You Know	Multiply by	To Find	Symbol
oz	ounces	28	grams	g
lb	pounds	0.45	kilograms	kg
	short tons (2000 lb)	0.9	tonnes	t

VOLUME

Symbol	When You Know	Multiply by	To Find	Symbol
tsp	teaspoons	5	milliliters	ml
Tbsp	tablespoons	15	milliliters	ml
fl oz	fluid ounces	30	milliliters	ml
c	cups	0.24	liters	l
pt	pints	0.47	liters	l
qt	quarts	0.95	liters	l
gal	gallons	3.8	liters	l
ft^3	cubic feet	0.03	cubic meters	m^3
yd^3	cubic yards	0.76	cubic meters	m^3

TEMPERATURE (exact)

Symbol	When You Know	Multiply by	To Find	Symbol
°F	Fahrenheit temperature	5/9 (after subtracting 32)	Celsius temperature	°C

Approximate Conversions from Metric Measures

LENGTH

Symbol	When You Know	Multiply by	To Find	Symbol
mm	millimeters	0.04	inches	in
cm	centimeters	0.4	inches	in
m	meters	3.3	feet	ft
m	meters	1.1	yards	yd
km	kilometers	0.6	miles	mi

AREA

Symbol	When You Know	Multiply by	To Find	Symbol
cm^2	square centimeters	0.16	square inches	in^2
m^2	square meters	1.2	square yards	yd^2
km^2	square kilometers	0.4	square miles	mi^2
ha	hectares (10,000 m^2)	2.5	acres	

MASS (weight)

Symbol	When You Know	Multiply by	To Find	Symbol
g	grams	0.035	ounces	oz
kg	kilograms	2.2	pounds	lb
t	tonnes (1000 kg)	1.1	short tons	

VOLUME

Symbol	When You Know	Multiply by	To Find	Symbol
ml	milliliters	0.03	fluid ounces	fl oz
l	liters	2.1	pints	pt
l	liters	1.06	quarts	qt
l	liters	0.26	gallons	gal
m^3	cubic meters	35	cubic feet	ft^3
m^3	cubic meters	1.3	cubic yards	yd^3

TEMPERATURE (exact)

Symbol	When You Know	Multiply by	To Find	Symbol
°C	Celsius temperature	9/5 (then add 32)	Fahrenheit temperature	°F

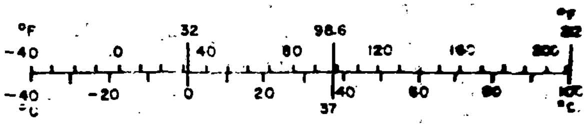

---

*1 in = 2.54 (exactly). For other exact conversions and more detailed tables, see NBS Misc. Publ. 286, Units of Weights and Measures, Price $2.25, SD Catalog No. C13.10:286.

TABLE OF CONTENTS

APPENDIX

LIST OF FIGURES

LIST OF TABLES

ACKNOWLEDGMENT

The successful completion of this Metroliner Ride Improvement Program depended on the design, research and testing efforts of a number of organizations. The organizations associated with the Program are shown below and their contributions hereby acknowledged.

Special acknowledgment is due both the Department of Transportation/Federal Railroad Administration (FRA) and the National Railroad Passenger Corporation (Amtrak) for their assistance and cooperation in accomplishing the objectives of the test work.

Department of Transportation/Federal Railroad Administration

National Railroad Passenger Corporation

Ensco, Inc.

J. W. Marchetti, Inc.

Acorn Associates

The Budd Company

1.0 PROGRAM SUMMARY

1.1 Introduction

The Metroliners, a fleet of electrified self-propelled rail cars now operated by National Railroad Passenger Corporation (Amtrak), were first placed in regular passenger service in January 1969. These cars, at that time, were the culmination of plans to supply a premium high speed service in the Northeast Corridor between Washington and New York with a high degree of passenger safety, comfort and luxury. Maximum speeds of 160 miles per hour were specified and successfully attained in test on sections of upgraded track.

In succeeding years, however, because of certain car maintenance difficulties and deteriorating track conditions, it was found necessary to significantly lower maximum speeds in order to reduce shop costs and to maintain acceptable levels of passenger comfort. More recently efforts have been made to upgrade the track and, in addition, to improve passenger comfort through modifications to the truck suspension in accordance with modern state-of-the-art techniques. The goal of these programs has been to restore the premium quality of the Metroliner service by upgrading the car riding qualities while at the same time reducing maintenance costs and noise levels.

As part of these overall efforts, the Department of Transportation/ Federal Railroad Administration (FRA) several years ago sponsored laboratory investigation and dynamic rail tests of the inherent and service generated vibrational response of typical Metroliner car bodies and trucks (Appendix A - Reference #1).

Following these studies, new specifications were generated and experimental prototype trucks were obtained for testing from the Vought Systems Division, LTV Aerospace Corporation, Dallas, Texas cooperating with the Swiss Industrial Company, Neuhausen, Switzerland (LTV/SIG). The new truck design was intended to improve the ride quality of the Metroliner cars throughout the speed range up to 160 miles per hour. (Appendix A - Reference #2).

Because of the modest ride improvement which was obtained with the prototype trucks and the high cost of replacing the original trucks, it was decided to further investigate the advantages of upgrading the present equipment by means of a Metroliner Truck Improvement Program. The GSI Engineering Division of General Steel Industries, Inc. (GSI) in St. Louis, Missouri, was selected to plan and implement such a program. It is the purpose of this report to summarize the results of design and ride testing procedures of the Metroliner trucks which were so modified in accordance with Contract DOT/FR 64237.

1.2 Object of Program

The current Metroliner GSI General 70 trucks have an excellent safety record and had been proven structurally sound in nearly ten years of the rigorous Corridor service. It was the intent of this Metroliner Truck Improvement Program, therefore, to demonstrate that riding quality could be adequately upgraded by means of modifications limited to replacement of a relatively minor number of carbody and truck components. Thus, in conformity with the latest known passive suspension techniques, it was proposed to utilize the major elements of the existing trucks which have performed well in the past and change only those elements which have the greatest influence on riding quality. The goals were to improve both the vertical and lateral ride and at the same time enhance the potential for reductions in noise levels inside the car as well as truck maintenance costs. It was further expected that by achieving these goals a plan for upgrading the riding quality of the full Metroliner fleet could be proposed within practical limits of time and financial expenditures.

1.3 Program Description

Based on the desired upgrading goals of improved riding, decreased maintenance costs and reduced noise, a work plan was devised to re-design and test elements of both the primary and secondary spring suspensions of the Metroliner trucks. Following approval of suggested suspension upgrading, the required new or modified parts were procured and applied to a carset of Metroliner trucks. Ride improvement and reliability was established during a series of road and laboratory tests and a final design arrangement was proposed covering the optimum combination of suspension components.

1.4 Conclusions

The collected test data indicates that the ride quality of the existing Metroliner cars can be improved by conversion of the truck suspension system to softer equalizer coil springs and Sumiride diaphragm type bolster air springs. This conversion is more economical than fully replacing the existing trucks and should also result in reduced maintenance costs.

2.0 PROGRAM WORK PLAN

The activities of GSI in completing the Metroliner Truck Improvement Program were divided roughly into five phases as follows:

2.1 Design Modification

This work consisted of preparing preliminary truck assembly and detail drawings necessary to illustrate the arrangement of the new suspension components proposed for later testing. During this period the characteristics of all components were analyzed and chosen to provide maximum upgrading of ride quality and interface drawings were prepared showing modifications required to the carbody underframe members. Regarding the carbody, the assistance of The Budd Company, builder of the Metroliner cars, was contracted to analyze and approve all carbody changes so that the structural integrity would not be impaired.

2.2 Test Article Preparation

All new or modified component parts for one carset of test trucks were supplied by GSI to the Amtrak Car Repair Shops in Wilmington, Delaware for application to a test car, (Metroliner #850). Truck and carbody modification work was performed in these shops with overall coordination and inspection by GSI personnel. Test instrumentation devices were attached to the trucks and connected to recording equipment inside the test car by the GSI Mechanical Laboratory test group. In addition, during this period, and later while road tests were underway, the assistance of J. W. Marchetti, Inc. was enlisted to monitor shop modifications and suspension element changeouts.

2.3 Road Tests

A road test plan was prepared by GSI and implemented with the assistance and approval of both Amtrak and the FRA. Test instrumentation which was applied to the test car and a companion car, (Metroliner #855), was also coordinated with portable ride quality testing packages operated by Ensco, Inc. of Alexandria, Va. (Ensco) under separate contract with the FRA - Office of Passenger Systems.

Road testing on Amtrak's Northeast Corridor tracks between Wilmington, Delaware and Baltimore, Maryland began in May 1977 and was completed in July 1977. During this period several series of tests were conducted to investigate the effect on riding quality resulting from variations and adjustments of the truck suspension system components. In completing these tests, data on parameters of various truck motions were recorded for study of overall truck stability and carbody accelerations were investigated to determine which combinations of suspension elements produced the best ride quality.

2.4 Static and Fatigue Tests

Required static and fatigue testing of a new bolster casting, as proposed for use in actual Metroliner service, was conducted in GSI's Mechanical Test Laboratory, located in Granite City, Illinois. Maximum design passenger loads were imposed during the static tests and a loading procedure derived from studies undertaken by the Transportation Systems Center of Cambridge, Massachusetts (TSC) was followed for the fatigue testing.

2.5 Final Design Configuration

Following the completion of all road testing and selection of suspension system components for optimum ride quality, final design drawings were prepared of the modified truck arrangement and details. These drawings specify the characteristics of all components as required for manufacture and application to existing trucks to attain an entire upgraded Metroliner suspension system.

3.0 GENERAL DESCRIPTION OF TRUCK

The existing Metroliner truck (Figures 1 & 2) is based on General Steel's General 70 series and was designed expressly for the Northeast Corridor service. It is characterized by the high and wide bolster spring locations with the carbody resting directly on these springs. These springs, in turn, are supported by the truck bolster. The bolster is connected to the carbody through two longitudinal anchors. The carbody, therefore, is cushioned by responsive deflection of the bolster springs both vertically and laterally but is tightly restrained longitudinally. Because of the bolster anchor restraint, the bolster is effectively "locked" to the carbody longitudinally and there is no swiveling between the carbody and bolster. The bolster rests on the truck frame at a central bearing, which allows the truck frame to swivel in relation to the truck bolster for proper alignment in traversing curves. The truck frame is cushioned against rail shocks by the equalizer springs which also serve to transmit the carbody and truck suspended mass loads to the wheelsets and thus to the rail.

The bolster air-coil springs and the equalizer coil springs in the original design constitute the major elements of the truck suspension system, the characteristics of which largely determine the quality of ride obtained. It was these elements, primarily, which were modified to provide improved performance for this series of tests. Because of space requirements for the new bolster air springs and increased auxiliary air reservoir capacity, it was found necessary to replace the existing bolster with a new design. Otherwise such parts as wheelsets, motors, brakes, equalizers and truck frames were used without

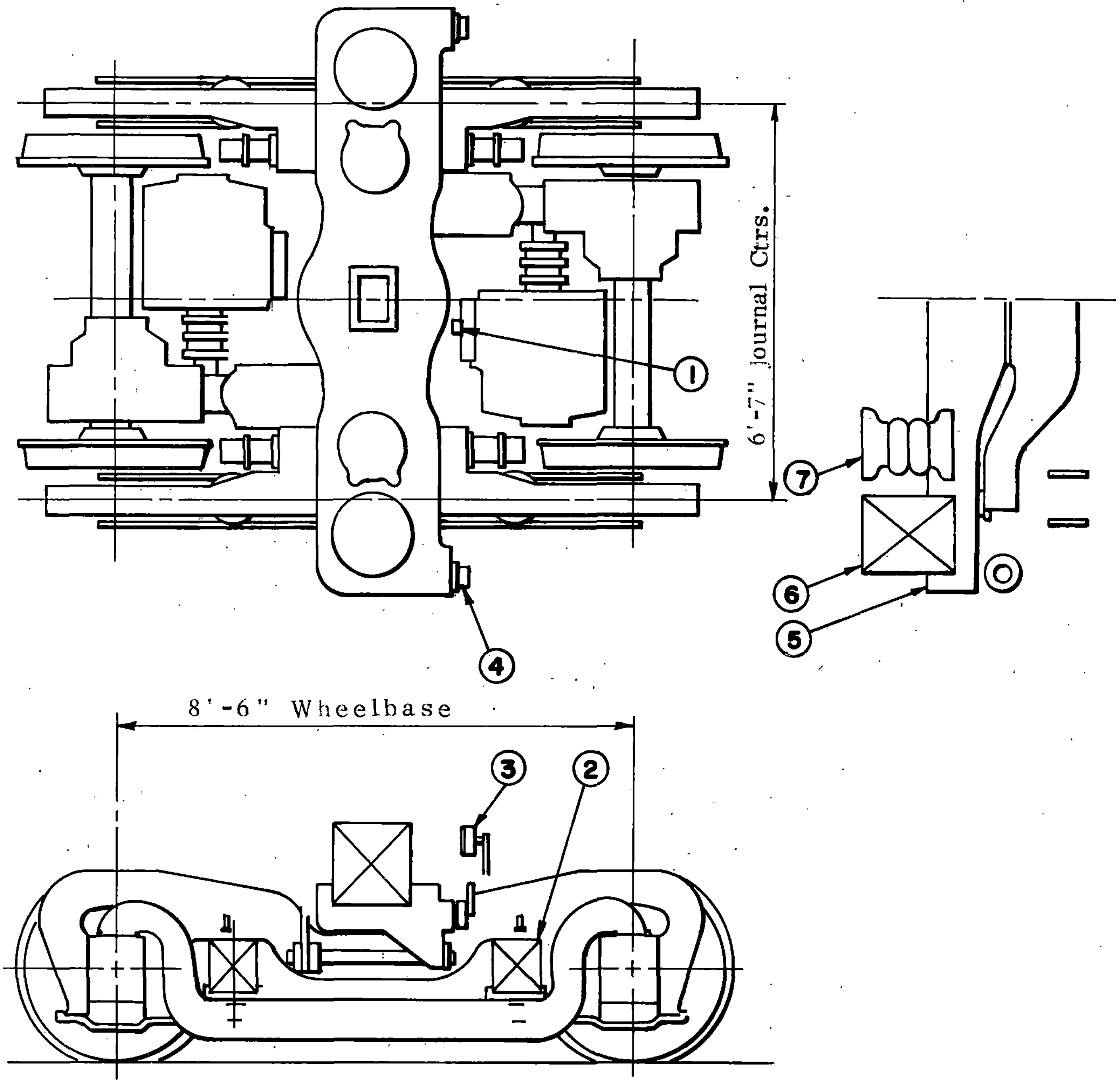

1. Leveling Valve
2. Pirelli Equalizer Springs
3. Secondary Vertical Dampers
4. Secondary Lateral Dampers
5. Truck Bolster
6. Secondary Coil Spring
7. Secondary Air Spring with Upper and Lower Integral Reservoir

FIGURE 1. METROLINER EXISTING TRUCK 33475

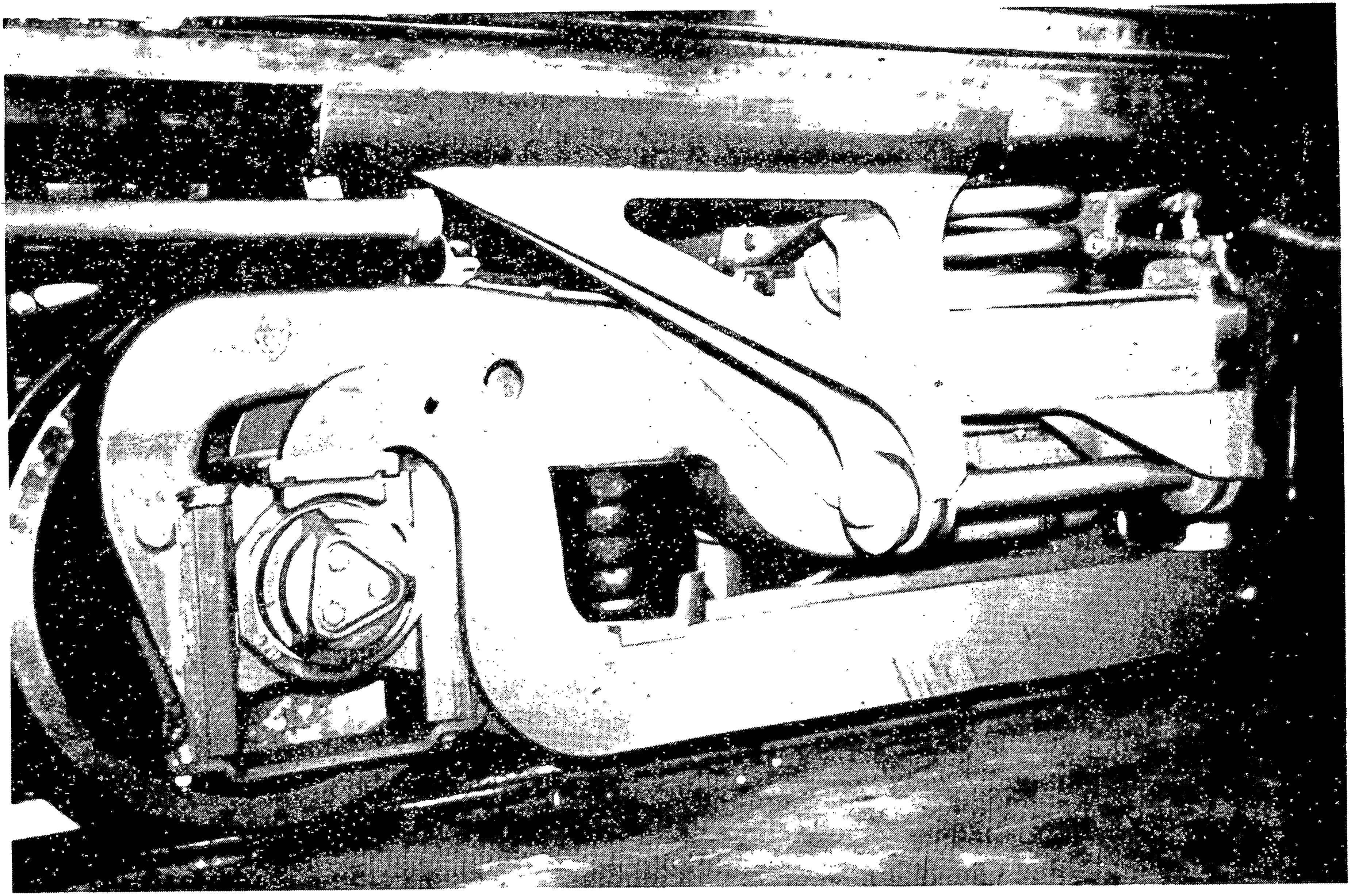

FIGURE 2 - METROLINER EXISTING TRUCK

change other than the addition of several minor brackets.

Thus the modified truck for test (Figures 3 & 4) differs from the existing arrangement (Figure 1) in the replacement of the bolster air-steel coil spring assemblies with full air spring and rubber sandwich combinations having lateral and vertical response characteristics designed to better cope with track irregularities now found in the Corridor environment. In addition, the Pirelli, rubber encased, equalizer coil springs were replaced with softer all steel coil springs chosen to better cushion rail shocks to the primary suspension system. Variable controlled damping of springs in both the primary (equalizer) and secondary (bolster) suspension systems was provided in order to permit optimization of ride quality during the road tests.

3.1 Description of Truck Sub-Systems

The general characteristics of the modified test trucks are described below in paragraph 3.1.1.

3.1.1 Basic Structure

In providing the means for ride improvement by upgrading the suspension systems, it should be noted that none of the basic design principles of the General 70 truck contributing to safety and stability of operation were sacrificed. The following list briefly describes these important elements of design:

Rigid framing — cast steel truck frame insures reliability and positive tramming.

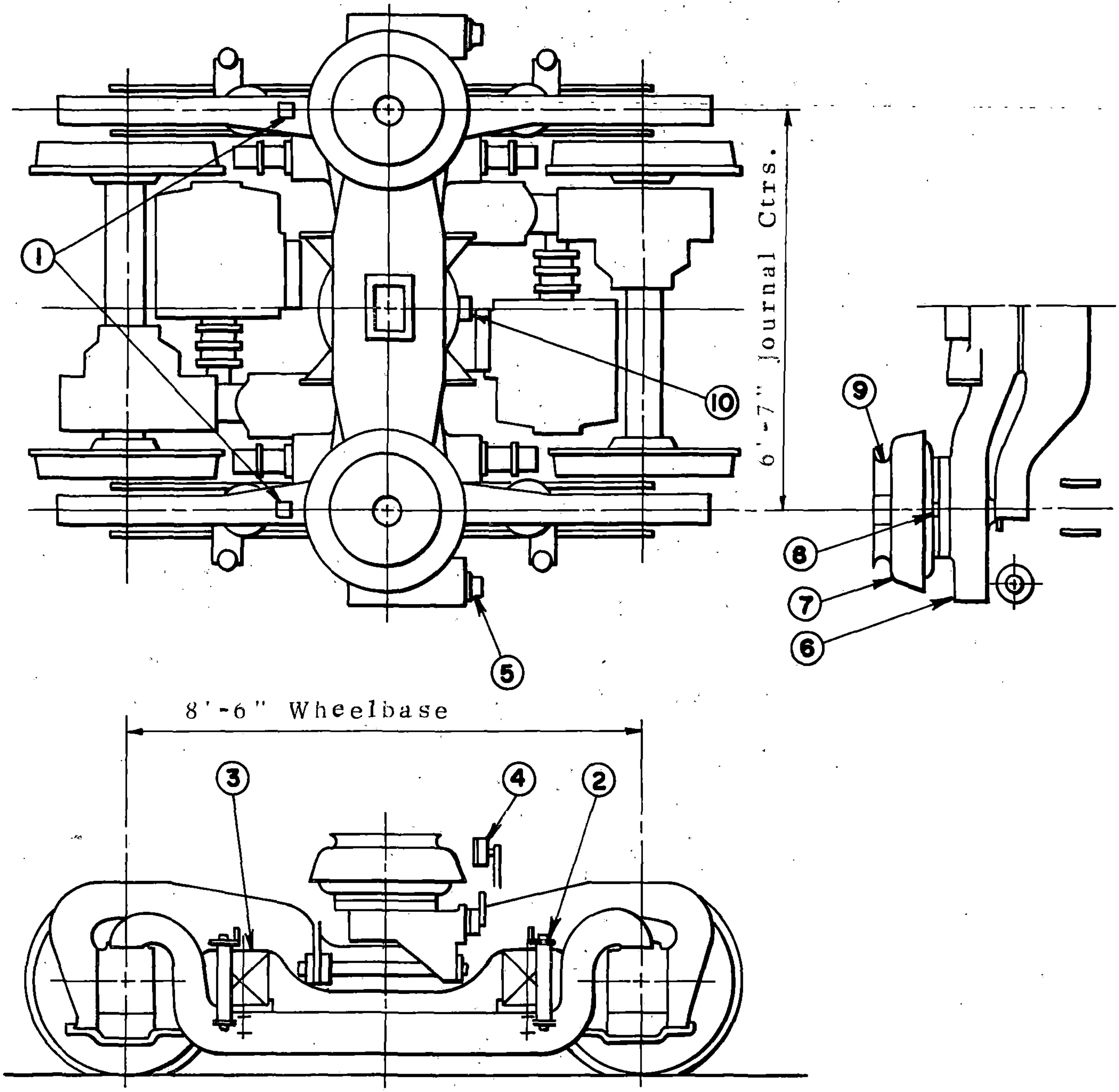

1. Leveling Valves
2. Primary Dampers (multiple options)
3. Steel Coil Equalizer Spring Nest
4. Secondary Vertical External Dampers (multiple options)
5. Secondary Lateral External Dampers (multiple options)
6. Truck Bolster/Secondary Air Reservoir
7. Secondary Air Spring (Sumiride shown, Firestone also tested)
8. Air Spring Orifice (multiple options)
9. Rubber Sandwich over Air Spring (solid spacer also tested)
10. Differential Check Valve

FIGURE 3. METROLINER TEST TRUCK 35270

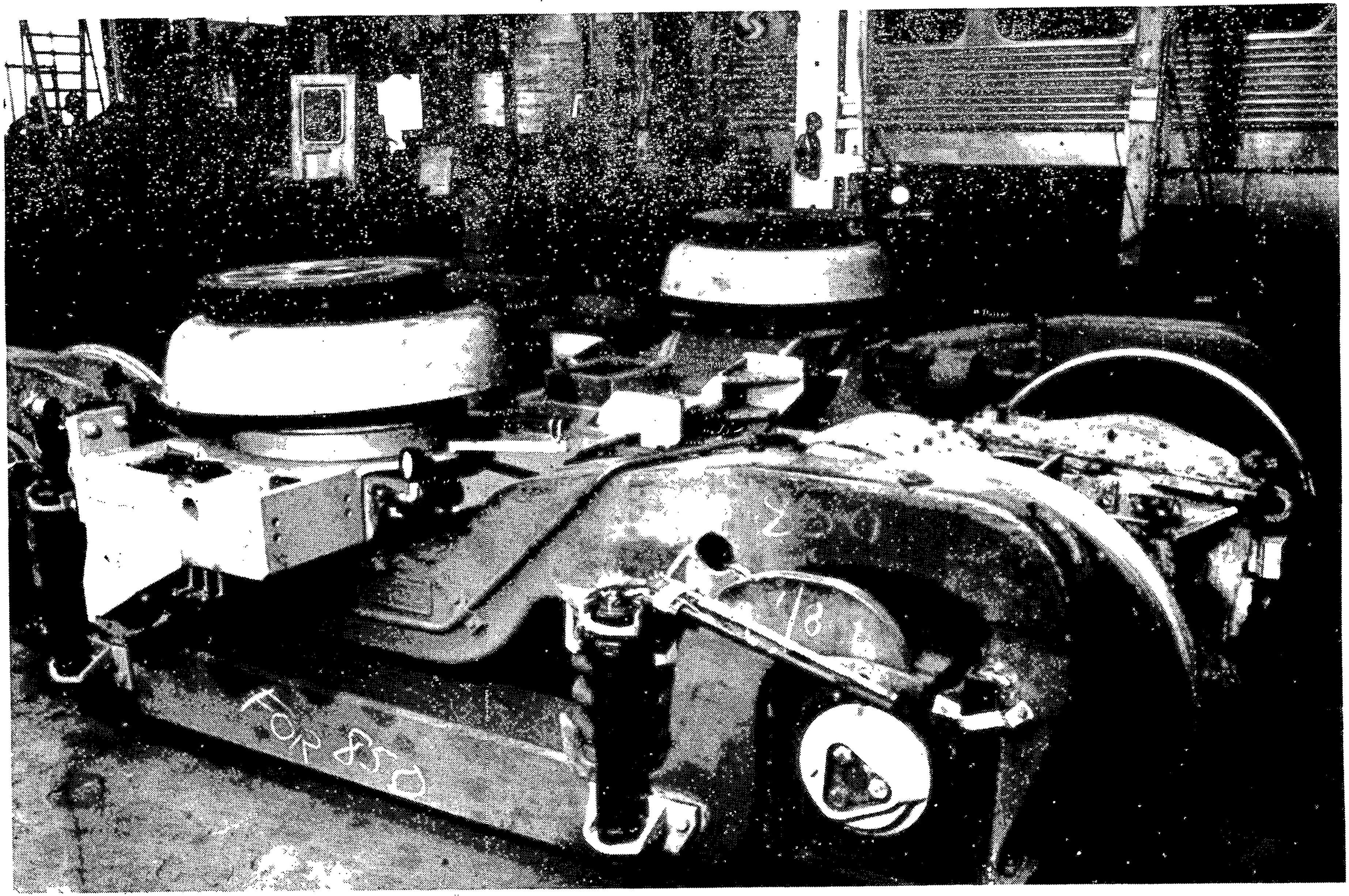

FIGURE 4 - METROLINER TEST TRUCK

Equalization — Separate equalizer provides proper load distribution and safety from derailment in event of sudden spring failure.

Hunting control — Furnished by rotational friction resistance of the large diameter central bearing.

Double spring system — Primary and secondary springs allow resilient suspension of motors and brakes as well as maximum capacity for body cushioning.

Controlled lateral motion — Bolster springs with lateral damping minimize carbody roll and cushion rail induced shocks.

Positive longitudinal positioning — Bolster anchors provide resilient control of braking and accelerating forces without restricting vertical and lateral motions of the secondary suspension system.

Noise control — Rubber cushioned pedestal liners and other insulation pads minimize generation and transmission of noise.

As noted in Section 3.0 a completely new bolster design was required to accommodate the new larger diameter Sumiride 630 air springs and to provide increased auxiliary air reservoir capacity. Provision for the larger springs also involved rather extensive structural modifications to the carbody bolster members which included relocation of bracket mountings for the shock absorbers, the lateral rubber bumper stops and the bolster anchor brackets. In addition, it was found necessary to substitute cable loops for the bolted-on "J" hooks which formerly prevented vertical separation of the trucks from the carbody.

Since formal strength verification tests for cable locking devices are not available, it was agreed with the FRA that a simple laboratory load test would be acceptable. The test was run in the GSI laboratory on December 3, 1976 and the test cable failed at 44,000 pounds.

The large diameter central bearing pads which furnish the frictional resistance to control truck hunting were originally manufactured by the Thermoid Corporation, but are no longer available. The central bearing pads used with the test trucks, and for all recent replacements in service, are manufactured by the Gatke Corporation and are produced of a molded material having comparable operating characteristics.

3.1.2 Primary Suspension System

It has been recognized that one of the potentials for truck performance improvement was the need to provide softer primary springing than existed with the present trucks. The Pirelli rubber encased equalizer springs were originally specified for use on the Metroliner trucks in order to minimize noise level and provide some hysteresis damping.

For a softer spring rate and more reliable service, therefore, the Pirelli rubber springs were replaced with nested steel coil springs. It was expected that the softer rate of the new equalizer coil springs would not only contribute to improved riding but would satisfactorily assist in maintaining a tolerable ride with the air springs in a deflated condition. Brackets were provided on the equalizers and truck frames to accept application of vertical shock absorbers so that the effect of damping on the vibrational response of the truck frame could be determined. These brackets were made to accept both hydraulic and friction type shock absorbers both diagonally or at the four corners of the truck frame so that, if desired, damping could be introduced to control vibrational modes of pitch, roll and bounce.

3.1.3 Secondary Suspension System

Of the several test truck modifications, the one with the most potential for passenger ride comfort improvement was the change from the air-coil secondary spring combination (Figure 5) to the full Sumiride diaphragm type air spring system shown in Figure 6. The existing arrangement (Figures 1 & 5) was selected originally to fulfill the constraint of maintaining scheduled speeds even with an air spring failure. To do this the air spring was designed so as to compensate only for the passenger load with the steel coil springs carrying the much greater carbody load. While the air-coil system provided a desirable low natural frequency, the coil spring was found to transmit an undesirable amount of high frequency vibration to the carbody. In addition, an inherent spring surge frequency of about 30 to 40 hertz contributed to noise and vibrations felt within the carbody.

The Sumiride diaphragm type air spring is a service proven product available from Sumitomo Metal Industries, Inc., Japan. The slant wall

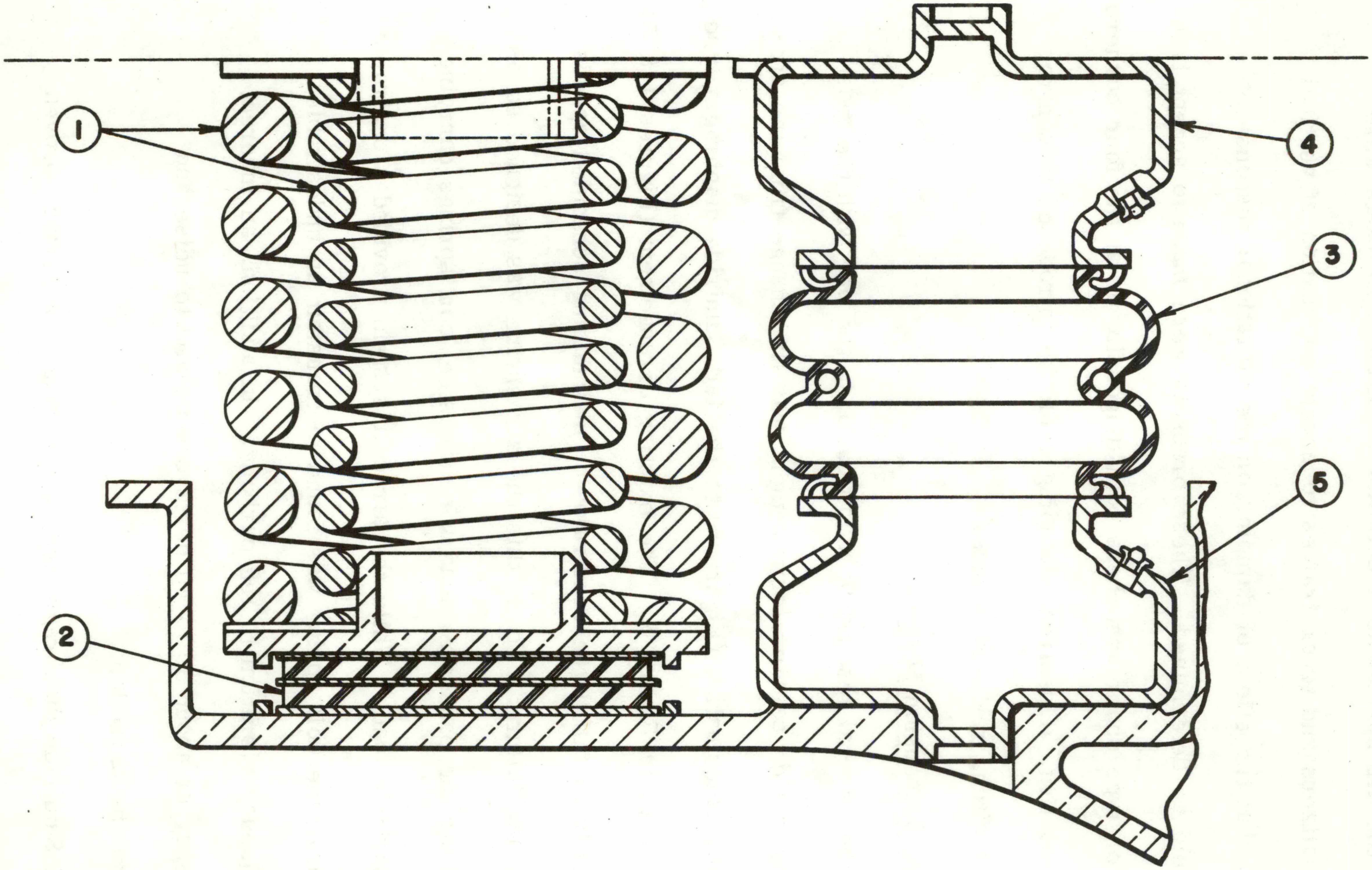

1. Bolster Coil Spring Assembly
2. Rubber Sandwich
3. Air Spring Assembly
4. Upper Reservoir
5. Lower Reservoir

FIGURE 5. METROLINER EXISTING TRUCK AIR-COIL SPRING ARRANGEMENT

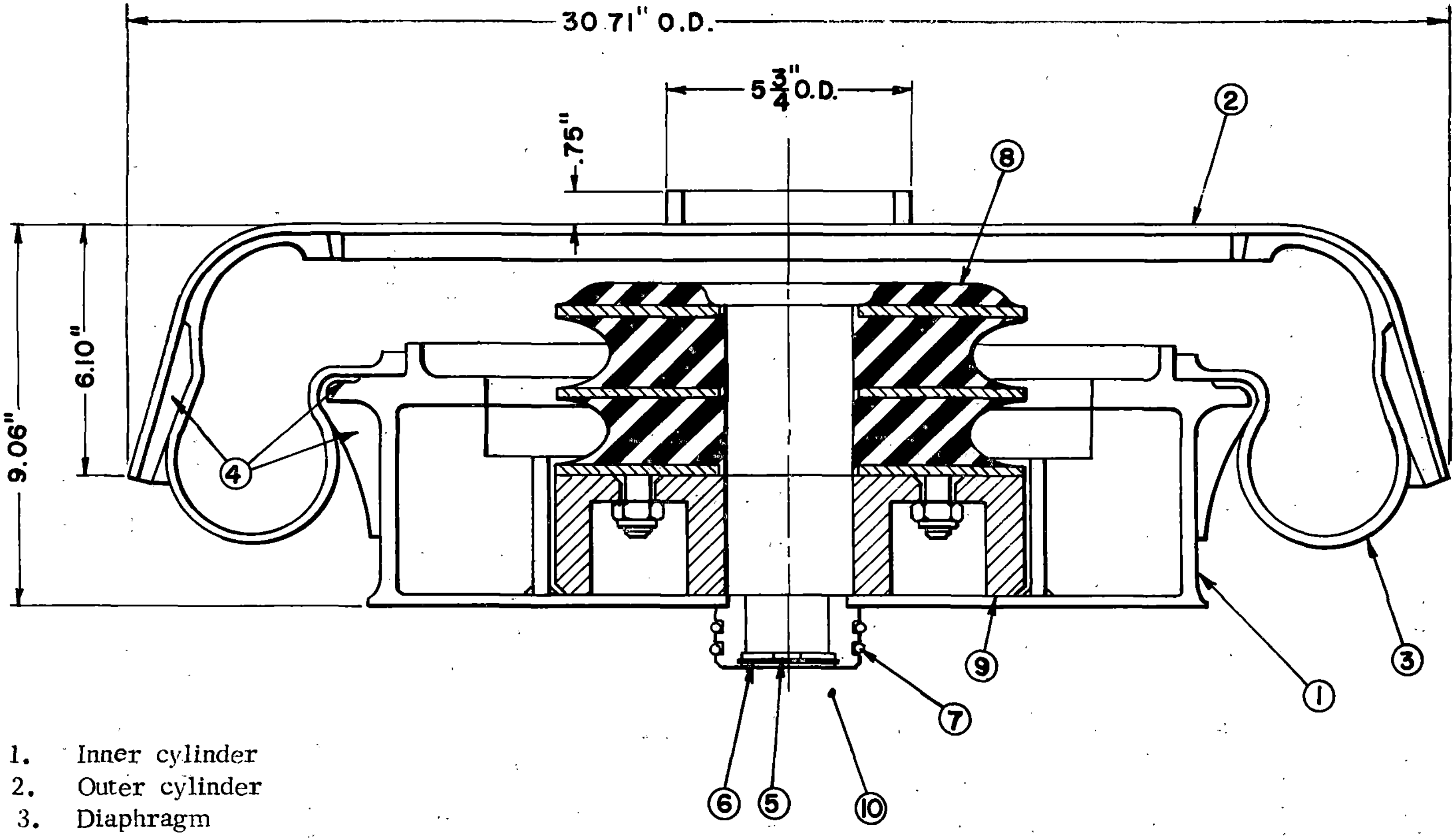

1. Inner cylinder
2. Outer cylinder
3. Diaphragm
4. Rubber bonded to cylinders
5. Orifice
6. Snap ring
7. "O" ring
8. Vertical rubber bumper
9. Bottom adapter
10. External air reservoir in truck bolster

FIGURE 6. METROLINER TEST TRUCK SUMIRIDE SPRING =630 WITH RUBBER BUMPER

version chosen for this ride improvement program allows a soft vertical and lateral spring rate combined with an extended lateral displacement range. Auxiliary rubber sandwiches mounted over the air springs were added to give an additional means of lateral rate adjustment and to make the lateral suspension even softer. An added advantage is that these sandwiches continue to provide lateral cushioning even in the unlikely event of air spring failure.

Auxiliary air reservoir capacity is required to obtain the most desirable spring rates with the Sumiride slant wall springs. This is obtained as an integral function of the new bolster design arrangement which also provides vertical internal orifice damping, as noted in Figure 6, item 5. Additional damping, both vertical and lateral, was provided externally by means of adjustable rotary hydraulic shock absorbers. It was one of the objects of the road testing program to determine the effectiveness of the external damping as well as the effect of changing the diameter of the orifices in the air springs.

The bolster lateral rubber bumper stops can also be considered a part of the secondary suspension system since they have been designed to resiliently limit lateral excursions of the carbody relative to the bolster. These rubber stops come into contact after 1-3/4" lateral motion to either side of the bolster centerline and thus provide additional lateral cushioning to the carbody under adverse track conditions.

Because of the expense and time involved in altering the body bolster construction to accept the large diameter Sumiride spring, an additional series of tests were conducted utilizing a Firestone #207-C double convolution air spring with the modified truck bolster. While this smaller diameter spring could fit into the same body bolster space as the original air-coil combination, it was not ideally suited because the necessarily higher air pressures required a four-ply construction which resulted in higher lateral and vertical acceleration rates and correspondingly lower ride quality. Accommodation for vertical orifice damping and both vertical and lateral external damping by hydraulic shock absorbers was provided the same as for the Sumiride series of tests.

3.1.4 Automatic Carbody Leveling System

The main function of the carbody leveling system is to meter air to the auxiliary air reservoir and air springs so as to maintain the nominal spring height regardless of load changes. With the existing cars this function is accomplished by one leveling valve per truck (two per car) so that each air spring is always inflated to the same pressure as the opposite spring on the same bolster. Air spring resistance to roll or correction of uneven floor level caused by off-center loading with this method is only very minimal as resulting from comparative differences in effective area of the double convolution air springs during compression and extension strokes.

For maximum car stability with the new slant wall air spring suspension, the piping was changed to accept two leveling valves per truck (four per car) one on each side of each truck. In this system, the bolster is compartmented, allowing each air spring to be connected to a separate air reservoir. Thus each air spring reacts independently to applied loads and thereby resists excessive roll conditions and maintains nominal cross level with the full effect of air pressure response.

A differential check valve is mounted between each air spring and adjusted to exhaust air from the inflated spring in the unlikely event its companion spring on the same bolster should become deflated, thus keeping the carbody level. The piping diagrams shown in Figures 7 & 8 illustrate the differences between the 2 and 4 valve leveling systems.

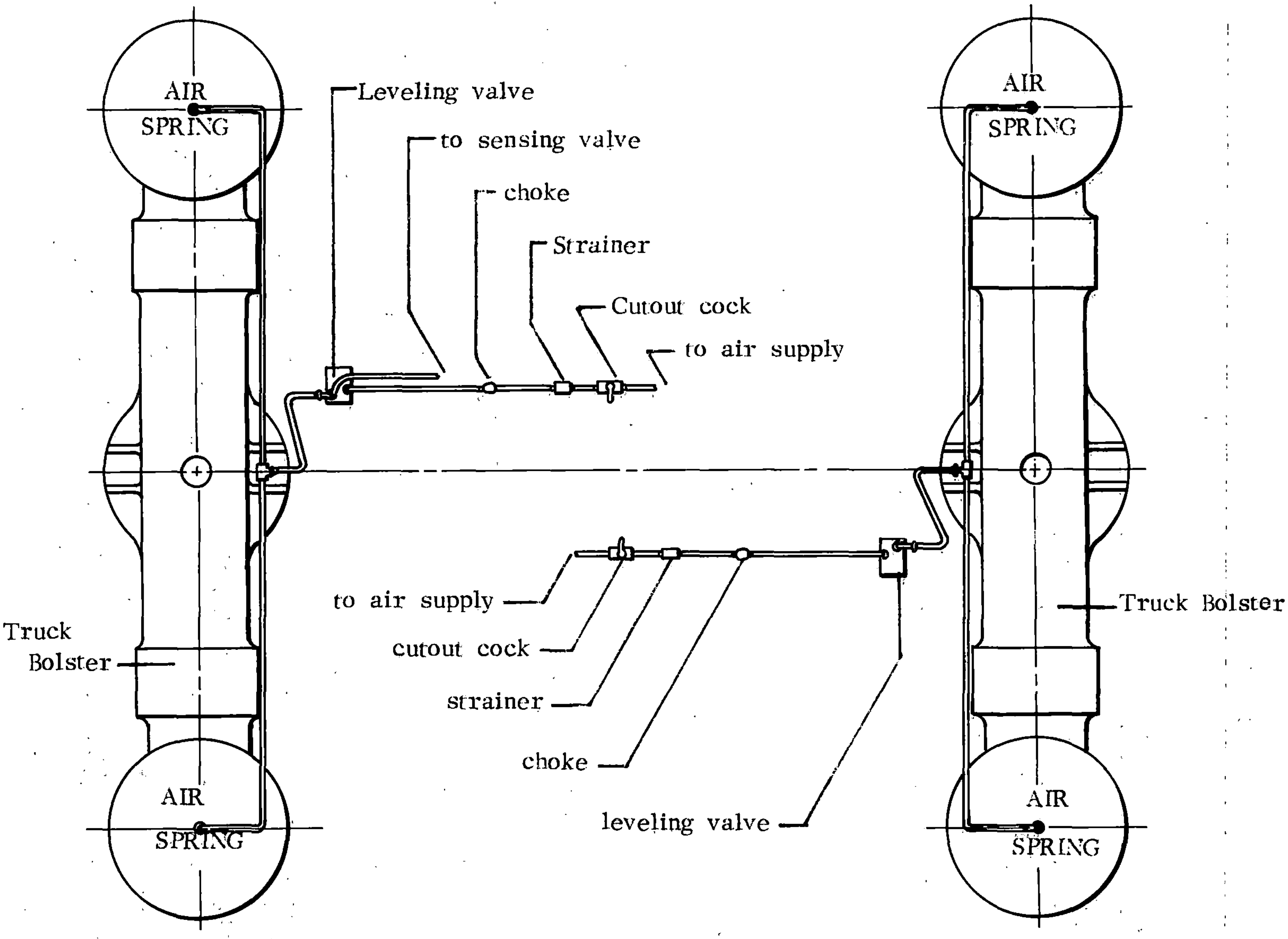

FIGURE 7. PIPING DIAGRAM - EXISTING CAR - 2 VALVE LEVELING SYSTEM

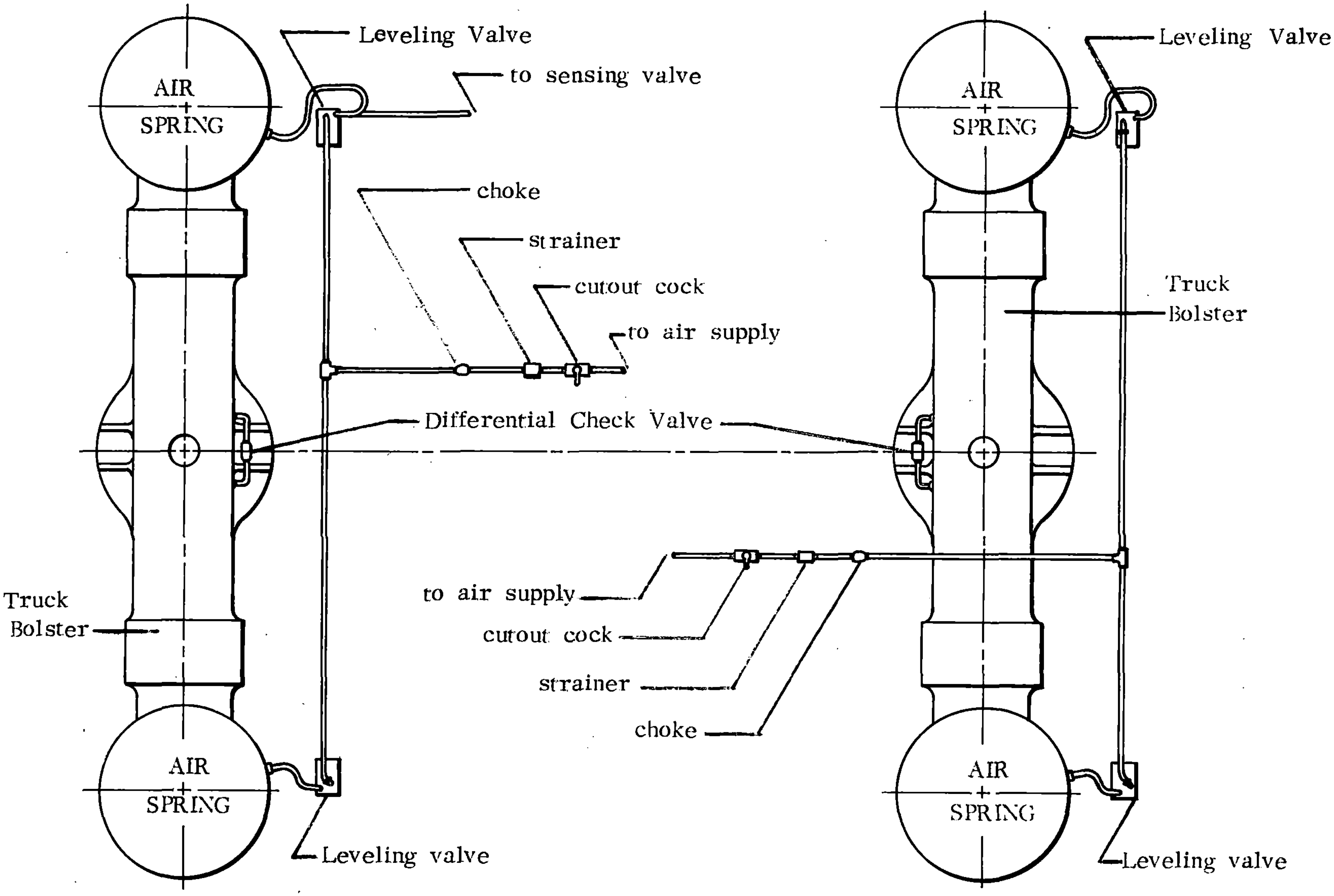

FIGURE 8. PIPING DIAGRAM - TEST CAR - 4 VALVE LEVELING SYSTEM

4.0 TRUCK PERFORMANCE AND SUSPENSION OPTIMIZATION

In making the final selection of spring and damping rates as calculated to result in maximum ride improvement, due notice was taken of prior Metroliner tests (see Appendix A) as well as related design and test work on other rail passenger equipment. In addition, with the assistance of Acorn Associates (Appendix A - Reference #5), design improvement objectives were confirmed by comparative computer analysis of the existing and modified vehicle response to various track irregularities. These studies were useful in providing some advanced indication of truck performance and stability and as an aid to interpreting test results.

5.0 TEST PLAN SUMMARY

5.1 Road Tests

The road tests required for verification of upgrading proposed for the Metroliner Truck Improvement Program were conducted on Amtrak revenue tracks between Wilmington, Delaware and Baltimore, Maryland. The purpose of these tests was to determine the combination of suspension elements and damping values which produced the most improvement in ride as compared to the constant base, or companion car. A summary of the test run series listing the combinations of suspension elements and damping value adjustments which were tested is shown in Table 1.

In preparation for testing, the underframe of Metroliner snack bar coach #850 was altered to accept modified trucks with the larger diameter Sumiride air springs. Snack bar coach #855, with existing trucks unchanged, was chosen to be the control, or companion car. These cars were the same as those used during the LTV/SIG testing in 1973. Trucks of both cars were overhauled and brought up to maintenance standards with new wheelsets installed.

Vertical and lateral accelerometers and various motion transducers were installed by GSI to measure ride quality and vehicle motions in both the #850 and #855 Metroliners. In addition, the FRA/Ensco Portable Ride Quality Package was used to collect ride quality data in both cars (Appendix A -Ref. #3).

After engineering design work was completed on a new bolster as required for application of Sumiride air springs, it was found that several spare bolsters were available from the Illinois Central Gulf Railroad (ICG) which could

TABLE 1

SUMMARY OF TEST SCHEDULE AND SUSPENSION SYSTEM CHARACTERISTICS

PRIMARY DAMPING SERIES

Test	Suspension Component Combinations
#1 May 11, 1977	#630 Sumiride Air Springs - 7/8" orifice Rubber Sandwich on top of Air Springs 4 - Vertical Primary Dampers - 2600 #/"/sec per truck Vertical Secondary Dampers - None 2 - Latersl Secondary Dampers - 530 #/"/sec per truck
#2 May 12, 1977	#630 Sumiride Air Springs - 7/8" orifice Rubber Sandwich on top of Air Springs Vertical Primary Dampers - None Vertical Secondary Dampers - None 2 - Lateral Secondary Dampers - 530#/"/sec per truck
#3 May 12, 1977	#630 Sumiride Air Springs - 7/8" orifice Rubber Sandwich on top of Air Springs 4 - Vertical Primary Dampers - 3440#/"/sec per truck Vertical Secondary Dampers - None 2 - Lateral Secondary Dampers - 530#/"/sec per truck
#4 May 16, 1977	#630 Sumiride Air Springs - 7/8" orifice Rubber Sandwich on top of Air Springs 4 - Vertical Primary Snubbers - 2000# per truck Vertical Secondary Dampers - None 2 - Lateral Secondary Dampers - 530#/"/sec per truck
#5 May 16, 1977	#630 Sumiride Air Springs - 7/8" orifice Rubber Sandwich on top of Air Springs 2 - Vertical Primary Snubbers - 1000# per truck Vertical Secondary Dampers - None 2 - Lateral Secondary Dampers - 530#/"/sec per truck

TABLE 1

PRIMARY DAMPING SERIES

Test	Suspension Component Combinations
#6 May 17, 1977	#630 Sumiride Air Springs - 7/8" orifice Rubber Sandwich on top of Air Springs 2 - Vertical Primary Dampers - 1300#/"/sec per truck Vertical Secondary Dampers - None Lateral Secondary Dampers - None

VERTICAL SECONDARY DAMPING SERIES

Test	Suspension Component Combinations
#7 May 25, 1977	#630 Sumiride Air Springs - 3/4" orifice Rubber Sandwich on top of Air Springs Vertical Primary Dampers - None Vertical Secondary Dampers - None 2 - Lateral Secondary Dampers - 530#/"/sec per truck
#8 May 25, 1977	#630 Sumiride Air Springs - 3/4" orifice Rubber Sandwich on top of Air Springs Vertical Primary Dampers - None 2 - Vertical Secondary Dampers - 286#/"/sec per truck 2 - Lateral Secondary Dampers - 530#/"/sec per truck
#9 May 26, 1977	#630 Sumiride Air Springs - 3/4" orifice Rubber Sandwich on top of Air Springs Vertical Primary Dampers - None 2 - Vertical Secondary Dampers - 114#/"/sec per truck 2 - Lateral Secondary Dampers - 530#/"/sec per truck
#10 May 26, 1977	#630 Sumiride Air Springs - 3/4" orifice Rubber Sandwich on top of Air Springs 2 - Vertical Primary Snubbers - 1000# per truck Vertical Secondary Dampers - None 2 - Lateral Secondary Dampers - 1060#/"/sec per truck

TABLE 1

VERTICAL SECONDARY DAMPING SERIES

Test	Suspension Component Combinations
#11 May 26, 1977 "O" track only	#630 Sumiride Air Springs - 3/4" orifice Rubber Sandwich on top of Air Springs 4 - Vertical Primary Snubbers - 2000# per truck Vertical Secondary Dampers - None 2 - Lateral Secondary Dampers - 530#/"/sec per truck
#12 June 2, 1977	#630 Sumiride Air Springs - 3/4" orifice Rubber Sandwich on top of Air Springs Vertical Primary Dampers - None Vertical Secondary Dampers - None 2 - Lateral Secondary Dampers - 170#/"/sec per truck
#13 June 3, 1977	#630 Sumiride Air Springs - 3/4" orifice Rubber Sandwich on top of Air Springs Vertical Primary Dampers - None Vertical Secondary Dampers - None 2 - Lateral Secondary Dampers - 50#/"/sec per truck

SPACER PLATE SERIES

Test	Suspension Component Combinations
#14 June 7, 1977	#630 Sumiride Air Springs - 3/4" orifice Spacer Plate on top of Air Springs Vertical Primary Dampers - None Vertical Secondary Dampers - None 2 - Lateral Secondary Dampers - 50#/"/sec per truck
#15 June 7, 1977	#630 Sumiride Air Springs - 3/4" orifice Spacer Plate on top of Air Springs Vertical Primary Dampers - None Vertical Secondary Dampers - None 2 - Lateral Secondary Dampers - 170#/"/sec per truck

TABLE 1

SPACER PLATE SERIES

Test	Suspension Component Combinations
#16 June 8, 1977	#630 Sumiride Air Springs - 3/4" orifice Spacer Plate on top of Air Springs Vertical Primary Dampers - None Vertical Secondary Dampers - None 2 - Lateral Secondary Dampers - 1060#/"/sec per truck
#17 June 8, 1977	#630 Sumiride Air Springs - 3/4" orifice Spacer Plate on top of Air Springs Vertical Primary Dampers - None Vertical Secondary Dampers - None 2 - Lateral Secondary Dampers - 50#/"/sec per truck

SUMIRIDE - BEST OF ALL COMPONENTS TESTS

Test	Suspension Component Combination
#18 June 23, 1977 June 24, 1977	#630 Sumiride Air Springs - 3/4" orifice Rubber Sandwich on top of Air Springs Vertical Primary Dampers - None Vertical Secondary Dampers - None 2 - Lateral Secondary Dampers - 170#/"/sec per truck
#19 June 27, 1977	Deflated Air Spring Test - same Suspension Components as Test #18 above

FIRESTONE AIR SPRING SERIES

Test	Suspension Component Combinations
#F-1 July 12, 1977	#207-C Firestone Air Springs - 3/4" orifice Spacer Plate on top of Air Springs Vertical Primary Dampers - None Vertical Secondary Dampers - None 2 - Lateral Secondary Dampers - 170#/"/sec per truck

TABLE 1

FIRESTONE AIR SPRING SERIES

Test	Suspension Component Combinations
#F-2 July 12, 1977	#207-C Firestone Air Springs - 3/4" orifice Spacer Plate on top of Air Springs Vertical Primary Dampers - None Vertical Secondary Dampers - None 2 - Lateral Secondary Dampers - 1060#/"/sec per truck
#F-3 July 15, 1977	#207-C Firestone Air Springs - 3/4" orifice Rubber Sandwich on top of Air Springs Vertical Primary Dampers - None Vertical Secondary Dampers - None 2 - Lateral Secondary Dampers - 530#/"/sec per truck
#F-4 July 15, 1977	#207-C Firestone Air Springs - 3/4" orifice Rubber Sandwich on top of Air Springs Vertical Primary Dampers - None Vertical Secondary Dampers - None 2 - Lateral Secondary Dampers - 170#/"/sec per truck
#F-5 & #F-6 July 26, 1977 July 27, 1977	Firestone - Best of All Components Test Same Suspension Components as Test F-4 above

be altered to suit the proposed test conditions. Although these bolsters would not be suitable for use in revenue service because of marginal strength for crush passenger loads, it was determined that they would be satisfactory for all of the planned road tests.

Therefore, in order to save time and assist Amtrak in making a decision on scheduling improvements to the Metroliners as early as possible, an Accelerated Test Program was started. In accordance with the revised test program, Amtrak purchased the two bolsters from the ICG Railroad and supplied them to GSI for the required modifications and these were used for all road tests.

After the first series of tests were completed, a deflated air spring test was conducted to observe the ride quality in the event of an air spring system failure.

5.2 Static and Fatigue Tests

In accordance with Contract DOT-FR-64237, one new cast steel bolster of the design approved for service on Metroliner cars was obtained from Buckeye Steel Castings. After inspection and acceptance, this bolster was given a static strain gage test to loadings established by GSI and approved by Amtrak and FRA.

The static strain gage test included a preliminary brittle lacquer application which provided visual means of determining stress distribution and allowed effective positioning of the 42 strain gages used to record stress levels throughout the casting under maximum design loads.

On successful completion of the static strain gage test the bolster casting was subjected to fatigue test loads and cycling established by the DOT/TSC based on environmental data obtained during the subject road tests. Total cycling included 2.6 x 10^6 applications of alternating vertical loads and 1.3 x 10^6 cycles of lateral and longitudinal loads.

A nominal vertical load of 73500# was imposed and alternating loads of 0.30 g were applied for a minimum of 0.6 x 10^6 cycles and 0.20 g for an additional 2.0 x 10^6 cycles. Alternating loads amounting to 15% of the vertical load were also applied laterally for 1.30 x 10^6 cycles. At the same time and for the same number of cycles, alternating loads totaling 15% of the maximum air spring design load were applied longitudinally at the bolster anchor centers. An internal air pressure of 74 psi in the air spring auxiliary air reservoir compartment was maintained throughout the duration of the fatigue testing.

6.0 ROAD TEST PLAN DESCRIPTION

6.1 Test Requirements

In support of the Metroliner Truck Improvement Program it was the responsibility of GSI to verify by road tests that the performance of the upgraded trucks would be dynamically stable at all track speeds up to 130 miles per hour. In addition, it was required that the quality of the ride with the modified Metroliner trucks be better than the ride of current typical Metroliners maintained to specification. In order that optimum ride quality could be determined, a test plan was devised such that the initial configuration of the modified design could be tested, changes to spring rates considered, adjustments to damping made and final run tests conducted.

6.2 Pertinent Data

All road tests were conducted on Amtrak revenue tracks between Wilmington, Delaware and Baltimore, Maryland. A number of test zones and speeds were selected by Amtrak to cover a range of typical operating conditions. In addition, before each run, a yard track adjacent to the Wilmington Shops, called the "naught" track, was used to visually monitor carbody motions and to measure effect of test modifications under adverse track conditions. A total of 24 road tests were conducted, starting on May 11 and ending on July 26, 1977.

6.3 Test Specimen

Metroliner snack bar coach #850 was chosen to be the test car and snack bar coach #855 the base, or comparison car. The cars were coupled at their "B" ends and, except for a brief use of car #855, were held out of service for the duration of testing so that valid comparison data could be assured (Figure 9). The modified suspension components were applied to trucks of car #850 and comparable truck elements of car #855 were overhauled and assembled to new truck standards.

In order to simulate a full seated passenger load, each car was ballasted with 13,000# of rail connectors distributed evenly from end to end of the seating area. Cars were operated as a two-car consist by assigned Amtrak crews with Metroliner #850 leading on Southbound runs and trailing on Northbound runs, except for "best of all components" runs when cars were also tested in reversed positions.

6.4 Test Systems

6.4.1 Instrumentation

The Portable Ride Quality Package instrumentation system used by Ensco to collect vehicle acceleration data is described in FRA/ORD Report 78-31 Volume 1, May 1978. For this series of tests, two ride quality accelerometer packages were used, one at the "A" end of test car #850 and the other at the "A" end of the base car #855. At various times during the tests, accelerations were recorded at the center of both cars. Data was recorded only from the three linear accelerometers in each package — vertical, lateral and longitudinal.

The two accelerometer units used by GSI were normally located adjacent to the Ensco packages and were made up of two Statham strain wire type instruments and one Columbia force balance accelerometer mounted on a common base. Each unit recorded vertical, lateral and longitudinal accelerations.

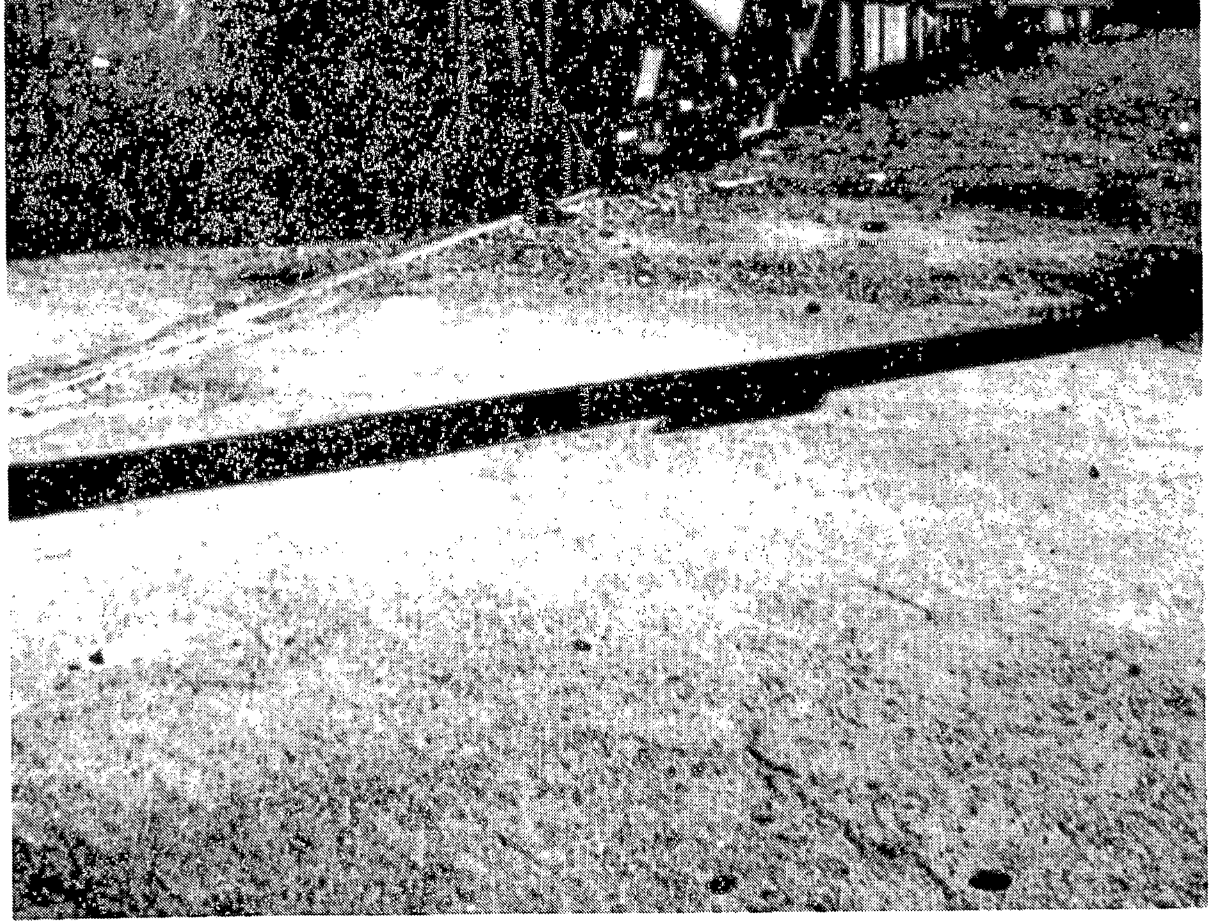

FIGURE 9 • ROAD TEST CONSIST

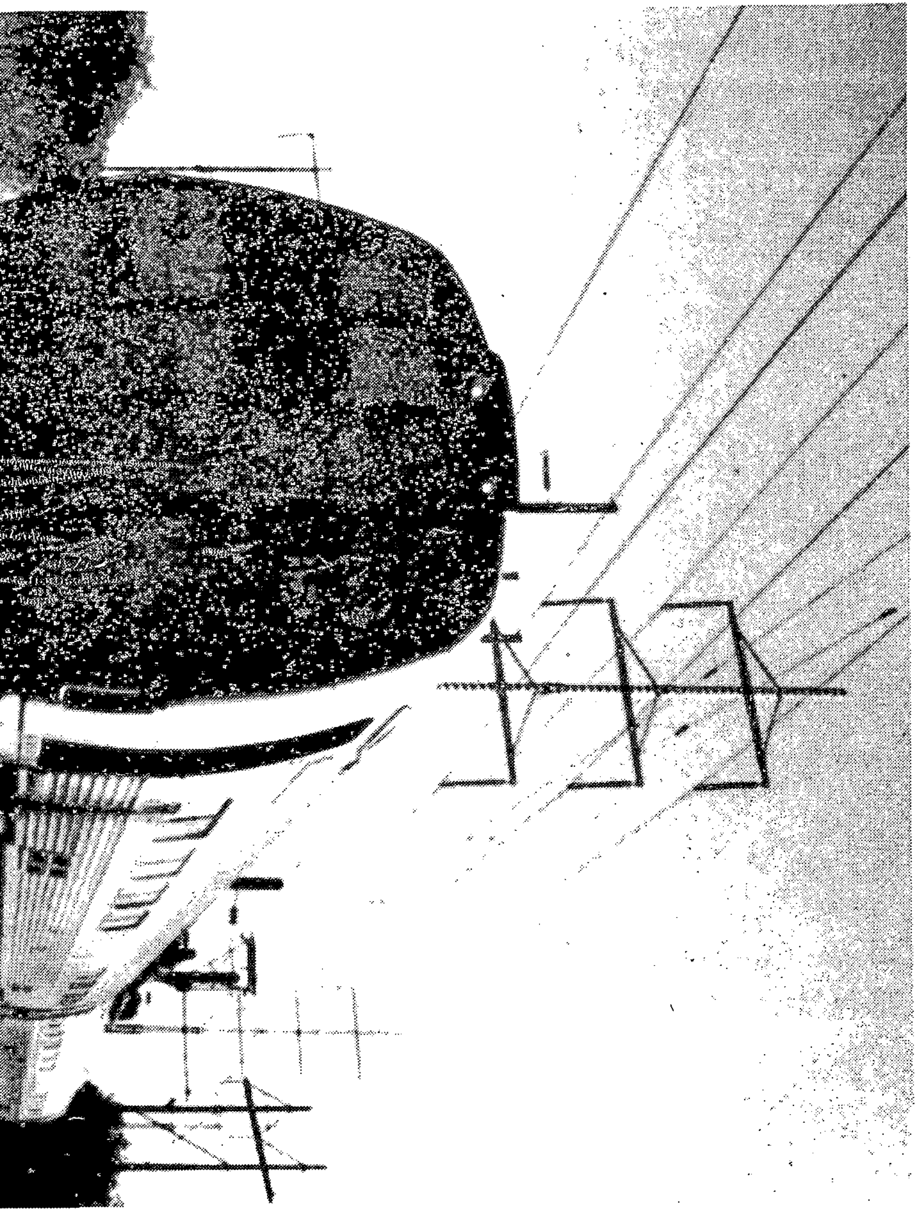

- CAR #850 AND CAR #855

During random intervals throughout the test, both GSI and Ensco accelerometer packages were placed side by side, calibrated and their output data recorded. Examination of strip chart analysis and PSD plots showed precisely the same acceleration levels and frequency response for both packages.

In addition to the carbody accelerations, various truck and carbody motions were monitored and recorded by GSI during the test series. This was done by motion transducers which convert motions to calibrated electrical signals suitable for oscillographic chart recording. Both strain gaged reeds and potentiometer type transducers were used for these tests.

The strain gaged reeds were constructed in the GSI test laboratory and consist of 3/32" x 3/4" x 18" spring steel strips with electric strain gages applied near one end. The end of the reed adjacent to the gages is held clamped to a truck or car member and the reed is driven as a cantilever at the opposite end by relative movement of another member. Since the deflection of a cantilever is proportional to its developed strain, this arrangement becomes a linear motion transducer measuring the relative motion between the two members in a direction at right angles to the plane of the reed. By proper positioning of these reeds, spurious motions in other directions do not produce strain. The only false recording from these reeds comes from the vibration of the reed as a "clamped-supported" beam and the amplitudes of these false signals are so low, and their frequencies so high, that they can easily be distinguished and rejected when interpreting the recordings.

The potentiometers were produced by Research Incorporated and also convert linear motion to electrical signals. They are equipped with retraction springs of 8-12 ounces and have a resolution of .005". Their maximum response as specified by the manufacturer is 50 feet per second.

The accelerometers and motion transducers were powered, balanced and calibrated by units designed and built by GSI test laboratory and their signals were recorded on either of two Honeywell Visicorders; one a Model 1508, a 24 channel recorder with 8" paper, and the other a Model 806-C, a 12 channel recorder with 6" paper.

The potentiometer transducer calibrations were established from bench checked values and these were set and maintained with a conditioning unit.

The reed type transducers were physically balanced and calibrated at the testing site and the circuits conditioned and calibrated by precision resistors.

The galvanometers used for motion and acceleration recording had a natural frequency of 40 Hz and were electrically damped. These low frequency galvanometers served to act as filters, particularly for accelerometer recording, to suppress high frequency components. All strip chart traces were governed by galvanometers having a natural frequency of 40 Hz except for carbody lateral acceleration traces which were governed by the 16 Hz natural frequency of the lateral accelerometers.

The resistance of the transducers was matched to the galvanometers in accordance with the instrument makers recommendations to produce 0.64 damping coefficient. The accelerometers are fluid damped to the same coefficient.

All of the transducers were circuit calibrated to insure against fade or change in input voltage. The reed transducers and accelerometers were calibrated by shunting one leg of the Wheatstone bridge with wire wound precision resistors. The potentiometers were circuit calibrated by a precision reference circuit. Calibration signals were recorded on all charts before and after the test runs to insure accuracy. Figure 10 shows the instrumented test truck under car #850.

The Honeywell Visicorder oscillograph was operated at chart speeds of 0.2, 1.0 and 5.0 inches/sec. as found desirable, and provided timing lines to suit requirements. Most of the recordings were taken at chart speed of 0.2 in/sec. with 1.0 sec. timing lines or at 1.0 in/sec. chart speed with 0.1 sec. timing lines. Horizontal reference lines are 0.1 inch spacing with each fifth line emphasized.

Speed and milepost locations were coded on all charts on signal from the train operator. Train speed was maintained as close as possible to preplanned levels throughout each test zone.

6.4.2 Data Systems

In addition to acceleration records which were taken on the "A" ends of both the test car (#850) and the companion car (#855) as noted above, various truck and carbody motions were recorded for verification of running stability and as data for further study leading to truck structural or riding quality improvement. For this test the following carbody and truck relative motions were recorded:

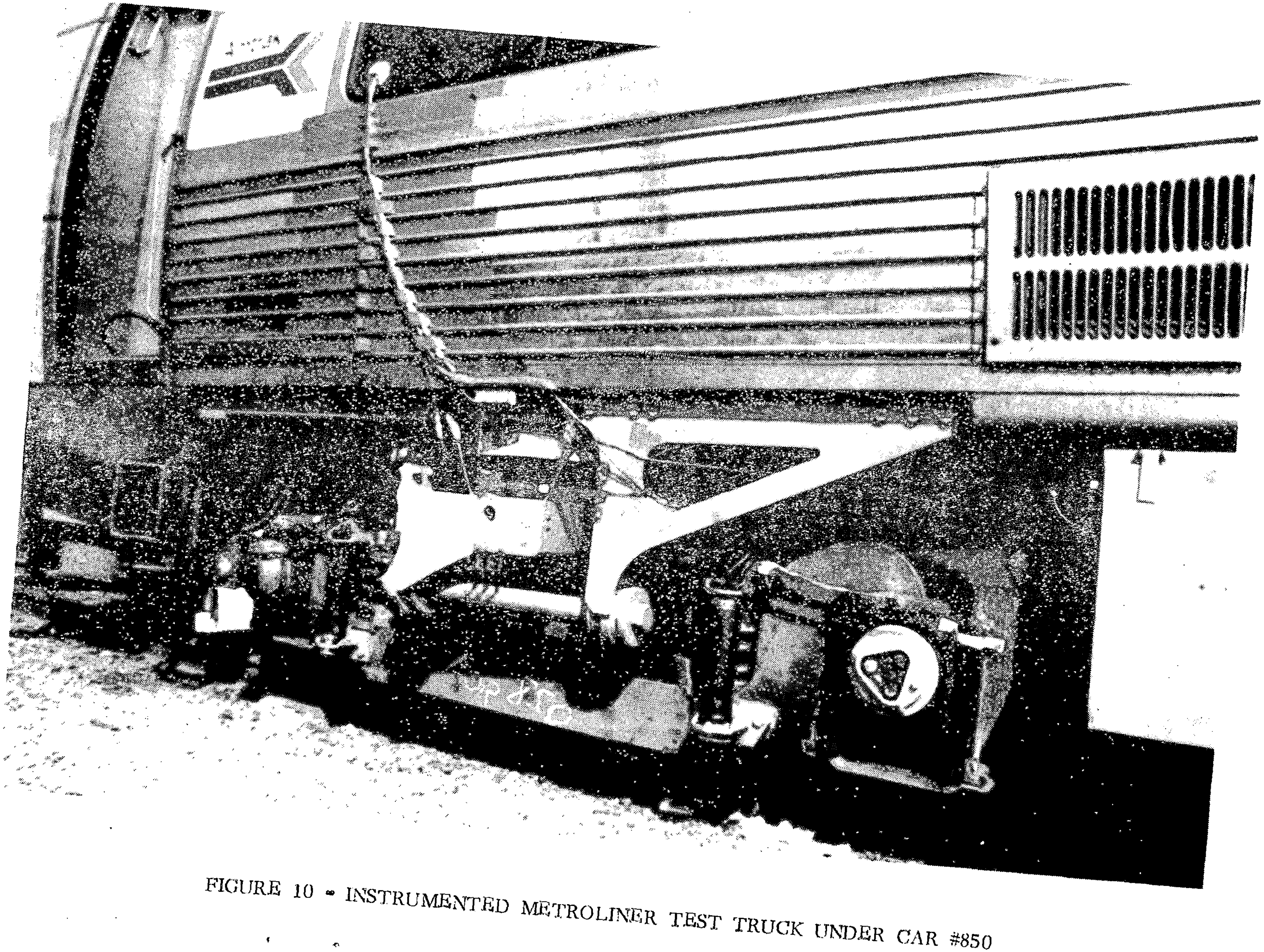

FIGURE 10 - INSTRUMENTED METROLINER TEST TRUCK UNDER CAR #850

Bounce - translatory vertical motion of the carbody.

Pitch - rotational motion in a longitudinal vertical plane between trucks and carbody.

Roll - rotational motion of the carbody in a transverse vertical plane.

Yaw - rotational motion of the carbody in a longitudinal horizontal plane between trucks.

Lateral - translatory transverse horizontal motion of the carbody.

Carbody motion in several of the above modes may occur simultaneously so that the resulting motion on a single corner air spring, for example, may have several components of motion at different frequencies with consequent complex wave form. It is usually more convenient to interpret the charts if these motions can be recorded as separate rotational or translatory motions. This is accomplished by setting up the transducers in pairs in such a manner, for example, that rotative motions only are recorded with translatory components rejected, or vice-versa. Also, if the carbody is simultaneously bouncing and pitching, the resulting total motion vertically at any point is a combination of pure vertical translation or bounce plus a rotation in the longitudinal vertical plane about the centerline of car, or pitch. The bounce component is recorded by combining the output of two vertical motion transducers at diagonally opposite corners of the car in such a manner as to electrically average the two outputs. Motions of roll and pitch are automatically eliminated from this recording because both of these modes produce equal and opposite deflections on the transducers, and thus are self-cancelling.

The pitch transducers are placed on the same side of the car but at opposite ends and electrically connected so that equal extensions are cancelled but extension of one transducer is added to retraction of the other, so that only the angular motion, or pitch, of the car about its centerline is recorded. The roll transducers are located directly opposite each other at one end of the car but otherwise connected electrically in the same manner as the pitch transducers. The yaw transducers are located at opposite ends of the car on the same side and are circuited like the pitch transducers. A single cantilevered reed responsive only to transverse motion is used to measure the lateral motion at the "A" end of the test car.

Similar positioning and circuitry was employed with the reed type motion transducers used on the "A" end truck members. The bounce transducers recorded only the vertical component of motion between the truck frame and the wheelsets. The pitch transducers sampled the angular motion in a longitudinal - vertical plane of the truck frame in relation to the journal boxes. The roll transducers recorded the angular motion of the truck frame in a transverse - vertical plane relative to the journal boxes. The swivel of the "A" end test car truck and the swivel of the "A" end companion car truck were measured using single reed type transducers mounted on the truck frames and driven by the carbody bolsters.

Strip chart identification, scale factors and sensor mounting for all the Sumiride test series accelerometer and transducer recordings are listed in Table 2.

In making the Firestone air spring series of tests a number of the carbody or truck pickups which had previously recorded insignificant data, such as the longitudinal accelerometers, were omitted. This allowed room on the Visicorder strip chart for some sampling of motor to gear lateral motion relationships and comparisons with roll and lateral motions of the companion car.

In addition to the above instrumentation for ride quality investigations, a request was made by the DOT/TSC for the application of several strain gages on the transverse center of the bolster to sample stress values due to vertical load. Static calibration of these gages was made by lifting the carbody from the truck for zero load and recording the strain gage readings with carbody re-applied for 1 g load. Measurements of dynamic strain gage values were recorded by Ensco during a typical test run and were later used by TSC to evaluate a fatigue load prediction model and test plan developed from prior test data. (Appendix A-Reference #4)

6.5 Test Procedure

The road tests were conducted with the two Metroliner snack bar coaches making up the train consist. Test zones and normal operating speeds are shown in Table 3 and, except for final proof runs, slow orders or loss of power, these speeds were adhered to throughout the test series.

Test data was recorded on oscillograph strip charts for all test

TABLE 2

ACCELEROMETER AND TRANSDUCER PICKUP CODING AND SCALE DATA - SUMIRIDE TEST SERIES

Strip Chart Line	Measuring	Sense & Cal. 0.1" Up Chart	Sensor Mounting
1	Vert. Accel.	0.05G Car Up	Accelerometer in car *
2	Lat. Accel.	0.025G to Rt.	Accelerometer in car *
3	Long. Accel.	0.05G Forward	Accelerometer in car *
4	Car Yaw	0.005 Radians "A" End to Rt.	(2) 2 gage reeds - truck frame to bolster end. Cancel lateral. one reed each truck.
5	Car Lat.	0.2" car to Rt.	(2) 2 gage reeds - truck frame to bolster end. Cancel yaw. One reed each truck.
6	Car Bounce	0.2" Car Up	(2) String Pots - diagonally across car one/truck. Cancel Roll & Pitch. Carbody to Bolster End.
7	Car Pitch	0.005 Radians "A" End Up	(2) String pots - same side of car one/truck. Cancel Roll & Bounce. Carbody to Bolster End.
8	Car Roll	0.004 Radians Car to Rt.	(2) String pots - one each end of bolster, same truck. Cancel Bounce & Pitch.
9	Truck Bounce	0.2" Trk. Down	(2) 2 gage reeds - diagonally across one truck Cancel Roll & Pitch. Truck Frame to Journal Box.
10	Truck Pitch	0.002 Radians "A" End Up	(2) 2 gage reeds - same side of one truck Cancel Bounce & Roll. Truck Frame to Journal Box.
11	Truck Roll	0.002 Radians Truck to Rt.	(2) 2 gage reeds - one each end of same axle. Cancel Bounce & Pitch. Truck Frame to Journal Box
12	Truck Swivel	0.001 Radians Trk. Counter-clockwise	(1) 4 gage reed - truck frame to bolster

* = Common Plate

TABLE 3
METROLINER IMPROVEMENT PROGRAM
TEST ZONES

Mile Post	Speed MPH	Class of Track	Track No.	Bolted Rail	Welded Rail
South Bound					
29.6 - 31	20	4	4	x	
33 - 34.5	40	4	4	x	
35 - 36.5	50	4	4	x	
37 - 38	20	4	4	x	
41 - 43	60	6	3		x
44 - 45	70	6	3		x
46 - 48	80	6	3	x	
49 - 51	80	6	3	x	
52 - 53	90	6	3		x
54 - 56	105	6	3		x
60.5 - 62	40	6	3		x
62.5 - 64	50	6	3		x
65 - 69	80	6	3		x
69 - 70	80	6	3	x	
73 - 75	90	6	3		x
76 - 78	105	6	3		x
North Bound					
74 - 72	105	6	2		x
63 - 62	40	6	1		x
61.5 - 60.5	50	6	1	x	
56.5 - 54	70	6	2		x
53.5 - 51	70	6	2		x
48 - 45	90	6	2		x
44 - 41	105	6	2		x
38 - 35	90	6	2		x
34 - 33	50	6	2		x
32.5 - 31.5	40	6	2		x

runs. Duplicate data was also recorded on tape by Ensco at various times over certain selected test zones. Preliminary shakedown runs indicated there was little significant difference in ride quality if either car was leading or trailing and all runs thereafter progressing to the final proof runs were made with test car #850 leading Southbound and trailing Northbound. Test data resulting from the different combinations of suspension system adjustments were analyzed after each test run for effect on riding quality and an optimum combination of suspension system components were later selected for final proof runs. For these "best of all components" tests an additional test run was made in order that data could also be accumulated with the train consist reversed so that the test car was now trailing Southbound and leading Northbound. Also, maximum speeds of up to 130 miles per hour were reached in several test zones where allowed by track condition.

After the first series of tests were completed, culminating in Tests #18 and #19 for the "best of all components" with Sumiride air springs, a test was made with one truckset of air springs deflated. In this test (#20) the "B" end Sumiride air springs of test car #850 were deflated and various speeds attained over revenue track up to 105 miles per hour, which was the highest speed permitted by track conditions. Test data was recorded Southbound from milepost 29.6 to milepost 38 and additional data was collected Northbound from milepost 30 at several track interlock locations.

Following the deflated air spring tests, a series of test runs were made with the Sumiride diaphragm springs replaced by Firestone double convolution type air springs. These tests were conducted to determine if the improvement in ride obtained during the first series of tests could be attained with a smaller diameter air spring installation, which would not require extensive carbody underframe modifications. Variations of suspension system adjustments were also tested in this series, ending with tests F-5 and F-6 for the "best of all components" combination.

After the completion of the GSI testing program, a supplemental test was conducted by Ensco to evaluate ride obtained with well maintained trucks versus ride quality of a Metroliner car requiring major maintenance work. For this test the Ensco accelerometer packages were placed on the companion car, #855, with its newly maintained trucks and on car #822, with trucks scheduled for overhaul. Ride quality data was then collected on both cars over the same test zone trackage and in the same manner as the "best of all component" tests.

7.0 TEST RESULTS

7.1 Road Tests

Definitive numerical data which allows an evaluation of ride quality between the test car (#850) and the base car (#855) is presented in Ensco's report No. FRA/ORD-78-31 (Appendix A - Reference #3). This report provides comparative results in both the vertical and lateral modes as determined by parameters of comfort levels (ISO reduced comfort exposure times - hrs) and acceleration levels (RMS levels - g's). A point system defined in the Specification for rating the overall data was applied. The results indicated that the 850 Metroliner rode better than the 855 Metroliner 79 percent of the time due to its improved suspension.

The greatest improvement in ride quality was in the vertical accelerations. While significant improvement in lateral accelerations was not attained, it will be noted that the effect of high frequency vibration was considerably reduced in both the lateral and vertical directions. Longidutinal accelerations were found to be minimal at all speeds.

It was evident early in the road test series that the better ride quality was obtained with the smaller amounts of external damping across both the primary and secondary vertical suspension systems. As this data accumulated it was found possible to omit all external damping and rely entirely on the damping effect of the internal orifices between the air springs and their associated auxiliary air reservoirs. Change in the diameter of these orifices from 3/4" to 7/8" was not found to be noticeable, however, the smaller 3/4" size was maintained for all latter tests in difference to the manufacturer's original recommendations and also to compensate, in part, for omission of external secondary vertical damping.

Substitution of spacer plates for the external rubber sandwiches over the air springs resulted in little noticeable difference in ride quality at service speeds. The rubber sandwiches were retained in the final configuration, however, in order to provide desirable lateral cushioning and maintain satisfactory ride quality even with the air springs deflated.

The data taken during the test run with deflated Sumiride air springs on the "B" end of car #850 at a speed of 105 miles per hour confirmed observations of test personnel that there was no substantial reduction in ride comfort and certainly no evidence of unstability (Appendix A - Reference #3).

Data taken during the Firestone "best of all components" tests indicated little improvement over ride of the base car #855. However, it is noted that the optimum ride conditions for the Firestone secondary air spring suspension were obtained with minimal damping values, the same as found with the Sumiride configuration.

Examination of motion indicator records for all test runs revealed no situations of instability and all motions were of an oscillating nature within limits of amplitudes as expected and provided by design, i.e. at no time throughout the tests did the trucks go into a sustained hunting mode regardless of speed or track condition. Truck stability on the improved trucks is comparable to proven stability on the base trucks. Phasing of these motions generally show a fairly close relationship to acceleration cycling in the same plane of motion. For example, the frequencies and amplitude values of carbody lateral accelerations often reflect the same phasing of carbody yaw and lateral motions. Similar relationships appear to exist between truck and carbody bounce, pitch and roll vibrations, however, this is not as clearly defined and apparently has little significance as affecting quality of ride.

The dominant vibrational mode of the carbody throughout the testing was found to be in yaw at frequencies ranging from 1.5 to 1.9 Hz for lower speeds, and decreasing to about 1.0 Hz at 90 miles per hour and above. This is a phenomenon observed in passenger cars of similar dimensions and appears to be the result of accumulated lateral freedom at the trucks. It is not readily controllable since some free clearance always exists between wheels and rails and a certain amount of lateral freedom is required in the secondary suspension system to cushion the effect of abrupt track irregularities.

7.2 Static and Fatigue Tests

The static strain gage test of the redesigned bolster casting verified that the maximum stresses developed under design crush loading were well within acceptable limits known to result in long life and failure-free operation in high speed railway service.

The favorable results of the static strain gage test were further reinforced by the successful conclusion of the fatigue test with no evidence of failure or structural degradation after nearly 3.0×10^6 cycles of vertical loadings.

This was verified throughout the test by visual inspection, periodic kerosene tests for cracks and the continuing operation of strain gages which were applied for the static test.

8.0 FINAL DESIGN CONFIGURATION

The characteristics of suspension components providing the best overall ride quality of all combinations tested are listed in Table 4. Subsequent modification and service operation of substantial numbers of the Metroliner fleet to these upgraded truck standards has also resulted in comparable ride improvement.

The first production design featured forged steel bolster safety straps rather than the 1/2" diameter steel cables used during the test series. Due to interference problems encountered with the forged straps, 5/8" diameter steel cables were substituted. The strength of these cables was certified by the manufacturer, assuring that the trucks cannot separate from the carbody in the event of derailment. This conversion also resulted in a reduced noise level since the rigid metal interference was eliminated.

The internal rubber bumpers (Figure 6, Item 8) were applied to cushion interaction of the top and bottom air spring elements in the event of loss of air pressure. It was found, however, during delivery of modified cars from the manufacturer that the deflection of these bumpers under carbody load with deflated air springs, added to the nominal 1-3/16" free clearance, allowed air spring internal interference. Production designs, therefore, were modified with the thickness of rubber bumpers reduced to limit total vertical deflection under load without air to 1-1/2".

TABLE 4

CHARACTERISTICS FINAL DESIGN CONFIGURATION

Suspension Component	Spring Rate
Primary equalizer steel coil springs	20188#/"/truck
Primary Damping	None
Secondary Air Springs	Sumiride #630 Lat. Rate 2880#/"/truck Vert. Rate 4211#/"/truck
Over Air Spring	1 layer rubber sandwich 23" dia. Lat. Rate 15,600#/"/truck
Secondary Vertical Damping	3/4" internal orifice no external damping
Secondary Lateral Damping	2-Houdaille Rotary/truck light 1 notch setting
Lateral Rubber Bumper Gap	1-3/4" ea. side
Auxiliary Air Reservoir Capacity	5600 cu.in/spring
Leveling Valves	2 per truck
Central Bearing	26" dia. Gatke Pad

9.0 TEST CONCLUSIONS

The Metroliner test car (#850) with the modified truck suspension system utilizing softer equalizer springs and full bolster air springs provided a better ride than the base car (#855) with standard trucks, and was stable over a wide variety of track conditions at all running speeds to 130 miles per hour.

The optimum ride improvement configuration was found to be with the Sumiride air springs, no external vertical damping across either the primary or secondary springs and only a light setting for the lateral damping of the secondary springs. Substantial improvement was achieved in reduction of the high frequency modes of vibration.

Amplitudes of truck and carbody relative motions at operating speeds in the test zones were all well within acceptable limits even with minimal damping effort. This was a favorable outcome since it allowed removal of all vertical external shock absorbers and this, in turn, provides reduction in potential maintenance costs.

Swiveling instability, or truck hunting, also was not found in either the test car or the base car with clean, well maintained central bearing pads supplying adequate frictional control of rotational oscillation.

A reasonable passenger comfort level was maintained throughout the usual operating speed range even with the Sumiride air springs deflated. This was attributed to the response of the softer equalizer coil springs in cushioning vertical rail shocks and the continuing lateral cushioning effect of both external and internal rubber sandwiches even when the Sumiride air springs are otherwise inoperative.

A secondary result of the testing program was an evaluation of the significant improvement in ride obtained from a car with well maintained trucks as compared to a car near the end of its maintenance cycle. The importance of this situation may not have been generally appreciated in the past and should now invite study of maintenance practices that could lead to further improvements in passenger comfort.

10.0 RECOMMENDATIONS

Following the conclusion of all test runs it was proposed that modifications allowing application of Sumiride air springs and primary steel coil springs be incorporated in an overall Metroliner Enhancement Program. Based on the test results, it is believed that this can be done at modest cost as compared to complete retrucking and will result in upgraded passenger comfort and improved truck maintenance conditions.

11.0 MAINTENANCE AND RELIABILITY

Review with shop personnel indicated that major truck suspension maintenance costs in the past have been caused by replacement of shock absorber end connections and replacement or shimming of Pirelli equalizer springs after taking a compression set. Since the vertical shock absorbers of the improved truck have been omitted and the Pirelli equalizer springs replaced by conventional steel coil springs, it is expected that both maintenance and reliability conditions will be much improved. It is also expected that the single Sumiride diaphragm type air spring will be easier to maintain than the dual secondary steel coil/air spring combination.

12.0 PRODUCTION COST ESTIMATES

Actual costs of truck conversion to the upgraded configuration as proposed based on the results of this Ride Improvement Program are not available. It can be noted, however, that as compared to a complete re-trucking program the following truck parts can be saved and re-used without change:

Wheel and axle assemblies
Motor and drive assemblies
Equalizer bars
Truck frames and attached parts
Brake assemblies
Bolster anchor assemblies

Since these items constitute a major portion of the cost of a complete truck it is evident that substantial savings are accumulated by initiating the truck modification program. Additional costs, of course, are generated in making carbody modifications, but these must be evaluated by comparison to potentially similar costs which would be undertaken in accommodating a wholly new truck design.

APPENDIX A - REFERENCES

1. Herring, James M. - "Metroliner Ride Improvement Program"
Report No. FRA-RT-73-30, February 1973.

2. "LTV/SIG Metroliner Truck-Final Design Report" -
Report No. FRA-OR&D 76-250 - August 1975.

3. "Metroliner Truck Improvement Program"
Ensco, Inc., Report No. FRA/ORD-78-31 - May 1978.

4. "Analysis of Pre-Production Operational Test Data For New Truck Bolster for Metroliner"
DOT/TSC Report - November 1977.

5. "Metroliner Ride Improvement Program - Vehicle Dynamic Analysis"
Acorn Associates - May 15, 1978.

Metroliner Truck Improvement Program (Final Report), 1980
US DOT, FRA, Robert M Seely