U.S. DEPARTMENT OF COMMERCE
National Technical Information Service

PB-291 877

Optical Automatic Car Identification (OACI). Volume I. Advanced System Specification

(U.S.) Transportation Systems Center, Cambridge, MA

Prepared for

Federal Railroad Administration, Washington, DC Office of Research and Development

Dec 78

REPORT NO. FRA/ORD-78/15. I

PB 291877

OPTICAL AUTOMATIC CAR IDENTIFICATION (OACI)

Volume I - Advanced System Specification

U.S. Department of Transportation
Research and Special Programs Administration
Transportation Systems Center
Cambridge MA 02142

DECEMBER 1978

FINAL REPORT

Prepared for

U.S. DEPARTMENT OF TRANSPORTATION
FEDERAL RAILROAD ADMINISTRATION
Office of Research and Development
Washington DC 20590

2.80

Technical Report Documentation Page

1. Report No. FRA/ORD-78/15,I	2. Government Accession No.	3. Recipient's Catalog No. PB291877
4. Title and Subtitle OPTICAL AUTOMATIC CAR IDENTIFICATION (OACI) Volume I - Advanced System Specification		5. Report Date DECEMBER 1978
		6. Performing Organization Code DTS-733
7. Author(s) Lennart E. Long		8. Performing Organization Report No. DOT-TSC-FRA-78-22,I
9. Performing Organization Name and Address U.S. Department of Transportation Research and Special Programs Administration Transportation Systems Center Cambridge MA 02142		10. Work Unit No. (TRAIS) RR816/R9307
		11. Contract or Grant No.
		13. Type of Report and Period Covered Final Report October 1977-July 1978
12. Sponsoring Agency Name and Address U.S. Department of Transportation Federal Railroad Administration Office of Research and Development Washington DC 20590		14. Sponsoring Agency Code DOT/FRA/OR&D/OFS/RRD-10

15. Supplementary Notes

This is one of four volumes which provide the final reports for the FRA OACI Improvement Effort. The other final reports cover the subjects of: Systems Alternatives Evaluation Model 78/15,IV (May 1978): Readability and Scanner Performance 78/15,II (March 1978); Optical Properties of Labels 78/15, III (to be published).

16. Abstract

A performance specification is provided in this report for an Optical Automatic Car Identification (OACI) scanner system which features 6% improved readability over existing industry scanner systems. It also includes the analysis and rationale which support this specification. This improved system is a result of design and test of selected modifications to existing equipment. It is projected that a cost reduction of fifty percent and a reliability improvement by a factor of three, along with a savings of seventeen hundred dollars per year due to maintainability considerations, could be realized using the new system. Sections of this report contain descriptions of test data showing the improvement in readability for degraded labels and difficult ambient conditions. Also included in this specification are guidelines for a compact, self calibrating scanner requiring no air conditioning. At the conclusion of the hardware and testing phase of the program, the modified scanner configuration was tested and demonstrated in the areas of optics, electronics, data processing, and packaging. Test results are included in this report.

17. Key Words Automatic Car Identification: Railroad Information Systems: Classification Yard Technology	18. Distribution Statement DOCUMENT IS AVAILABLE TO THE PUBLIC THROUGH THE NATIONAL TECHNICAL INFORMATION SERVICE, SPRINGFIELD, VIRGINIA 22161

19. Security Classif. (of this report) Unclassified	20. Security Classif. (of this page) Unclassified	21. No. of Pages 280	22. Price PC A13/MF A01

Form DOT F 1700.7 (8-72) Reproduction of completed page authorized

METRIC CONVERSION FACTORS

Approximate Conversions to Metric Measures

Symbol	When You Know	Multiply by	To Find	Symbol
		LENGTH		
in	inches	2.5	centimeters	cm
ft	feet	30	centimeters	cm
yd	yards	0.9	meters	m
mi	miles	1.6	kilometers	km
		AREA		
in^2	square inches	6.5	square centimeters	cm^2
ft^2	square feet	0.09	square meters	m^2
yd^2	square yards	0.8	square meters	m^2
mi^2	square miles	2.6	square kilometers	km^2
	acres	0.4	hectares	ha
		MASS (weight)		
oz	ounces	28	grams	g
lb	pounds	0.45	kilograms	kg
	short tons (2000 lb)	0.9	tonnes	t
		VOLUME		
tsp	teaspoons	5	milliliters	ml
Tbsp	tablespoons	15	milliliters	ml
fl oz	fluid ounces	30	milliliters	ml
c	cups	0.24	liters	l
pt	pints	0.47	liters	l
qt	quarts	0.95	liters	l
gal	gallons	3.8	liters	l
ft^3	cubic feet	0.03	cubic meters	m^3
yd^3	cubic yards	0.76	cubic meters	m^3
		TEMPERATURE (exact)		
°F	Fahrenheit temperature	5/9 (after subtracting 32)	Celsius temperature	°C

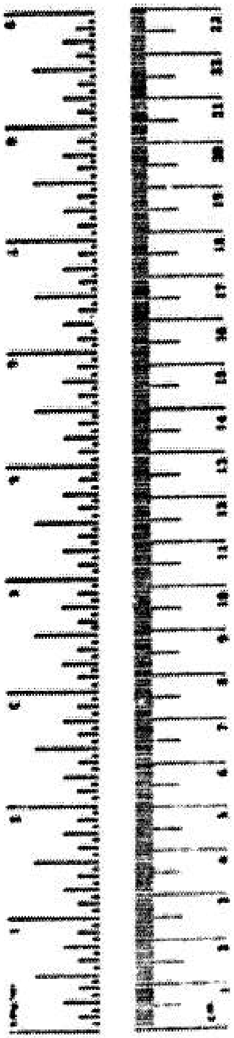

Approximate Conversions from Metric Measures

Symbol	When You Know	Multiply by	To Find	Symbol
		LENGTH		
mm	millimeters	0.04	inches	in
cm	centimeters	0.4	inches	in
m	meters	3.3	feet	ft
m	meters	1.1	yards	yd
km	kilometers	0.6	miles	mi
		AREA		
cm^2	square centimeters	0.16	square inches	in^2
m^2	square meters	1.2	square yards	yd^2
km^2	square kilometers	0.4	square miles	mi^2
ha	hectares (10,000 m^2)	2.5	acres	
		MASS (weight)		
g	grams	0.035	ounces	oz
kg	kilograms	2.2	pounds	lb
t	tonnes (1000 kg)	1.1	short tons	
		VOLUME		
ml	milliliters	0.03	fluid ounces	fl oz
l	liters	2.1	pints	pt
l	liters	1.06	quarts	qt
l	liters	0.26	gallons	gal
m^3	cubic meters	35	cubic feet	ft^3
m^3	cubic meters	1.3	cubic yards	yd^3
		TEMPERATURE (exact)		
°C	Celsius temperature	9/5 (then add 32)	Fahrenheit temperature	°F

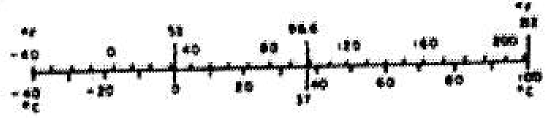

PREFACE

This document is the final report of GWA 78-RR, PPA RR-816, a project entitled "Automatic Car Identification Optical Scanner (OACI) Improvements," completed by the Transportation Systems Center (TSC) under Federal Railroad Administration (FRA) sponsorship. A performance specification is provided in this report for an OACI scanner system which features 6% improved readability over existing industry scanner systems. It also includes the analysis and rationale which support this specification. This improved system is a result of design and test of selected modifications to existing equipment. It is projected that a cost reduction of fifty percent and a reliability improvement by a factor of three, along with a savings of seventeen hundred dollars per year per system due to maintainability considerations, could be realized using the new system. Sections of this report contain descriptions of test data showing the improvements in readability for degraded labels and difficult ambient conditions. Also included in this specification are guidelines for a compact, self-calibrating scanner requiring no air conditioning. At the conclusion of the hardware and testing phase of the program, the modified scanner configuration was tested and demonstrated in the DOT/TSC OACI Laboratory. Improvements were achieved and demonstrated in the areas of optics, electronics, data processing, and packaging. Test results are included in this report.

ACKNOWLEDGMENTS

An Optical Automatic Car Identification (OACI) Program Phase II was initiated in 1976 by the Federal Railroad Administration (FRA) as part of a joint effort among the Association of American Railroads (AAR), the Railway Progress Institute (RPI), the Federal Railroad Administration (FRA), and the Transportation Systems Center (TSC). This accelerated activity program was developed and carried out to provide operational limit specifications to be used by the FRA and the AAR concerning decisions on OACI. This effort took extremely hard work and could not have been successfully concluded without the contributions of several key individuals and organizations.

The author wishes to acknowledge R. E. Parsons, Associate Administrator for Research and Development of the FRA, who provided the overall program guidelines and interfaces between the significant organizations and contractors, D. L. Spanton, Director, Office of Freight Systems of the FRA, and A.J. Bang, Chief of the Freight Service Division, who provided the leadership and management skills to oversee activities of the OACI Program within the Federal Government and provided timely guidelines as the "Senior OACI Officers" in the FRA, W. F. Cracker of the same FRA division who was the Project Officer of the OACI Program task, and the OACI/AAR/RPI/FRA Steering Committee for providing the necessary overall guidance and coordination for the successful execution of this task.

Also, progress toward our goals would have not been possible without the full support in the performance of our work by the suppliers of OACI equipment.

The phase II technical effort was carried out with the superior performance of Robert Wiseman, Task Force Project Engineer, and Melvin Yaffee, OACI Lab Technician, both of TSC. They provided substantial contributions to the text of this Specification.

CONTENTS

Page

1. SCOPE 1

2. APPLICABLE DOCUMENTS 2
- 2.1 Government Documents 2
- 2.2 Non-Government Documents 3
- 2.3 References 3

3. REQUIREMENTS 4
- 3.1 Introduction 4
- 3.2 Background 6
- 3.3 Current Scanner System Description 10
- 3.4 Scanner System Improvements 21
  - 3.4.1 First Stage Improvements 21
    - 3.4.1.1 Optics Modification 22
    - 3.4.1.2 Line Driver Improvements 24
    - 3.4.1.3 New Standardizer 25
  - 3.4.2 Second Stage of Improvements 27
    - 3.4.2.1 Problem Definition 27
    - 3.4.2.2 System Considerations 28
    - 3.4.2.2.1 Signal Characterization 28
    - 3.4.2.2.2 Filtering and Detection 30
    - 3.4.2.2.3 System Implementation 33
    - 3.4.2.2.4 Examples of Implementation 33
    - 3.4.2.2.4.1 Single Scan System 33
    - 3.4.2.2.4.2 Two-Scan System 36
- 3.5 Experimental System Configuration 42
  - 3.5.1 Digital Label Locator Subsystem 45
    - 3.5.1.1 Digital Label Locator Functional Description 46
    - 3.5.1.2 Start/Stop Detector 48
    - 3.5.1.3 Intermodule Period Detector 49
    - 3.5.1.4 Label Recognition Logic 51
    - 3.5.1.5 Start/Stop Calculator 51
    - 3.5.1.6 Display Buffer 53
  - 3.5.2 Module Processor Subsystem 57
    - 3.5.2.1 Gate Generator 57
    - 3.5.2.2 Data Buffer 61
    - 3.5.2.3 Detailed Circuit Diagrams 65
- 3.6 Post Detection Processor Software 66
  - 3.6.1 Microprocessor Hardware Overview 67
  - 3.6.2 Software Description 67
- 3.7 Improved Optics 73
  - 3.7.1 Background 73
  - 3.7.2 Analytical Studies 74
  - 3.7.3 Design Improvements 74
  - 3.7.4 Final Modifications 75
- 3.8 Other System Characteristics 79
  - 3.8.1 Interface Requirements 79

CONTENTS (Continued)

Page

3.8.2 Operating Voltage and Power Requirements 82
3.8.3 Power Outage 82
3.8.4 Power Conditioning 82
3.8.5 System Reset 83
3.8.6 Input Signal Characteristics 83
3.8.7 Output Signal Characteristics 83
3.8.8 Mechanical Interface 84
3.8.8.1 Scanner System Compatibility 84
3.8.8.2 Equipment Cabinet Electrical Interface 84
3.8.9 Component Identification 84
3.9 Design and Construction 84
3.9.1 General Design Features 84
3.9.2 Selection of Specifications and Standards 85
3.9.3 Materials, Parts, and Process 85
3.9.4 Standard and Commercial Parts 85
3.9.5 Printed Circuit Boards 85
3.9.6 Corrosion of Metal Parts 86
3.9.7 Interchangeability and Replaceability 86
3.9.8 Workmanship 86
3.9.9 Electromagnetic Interference 86
3.9.10 Identification and Marking 87
3.10 Wayside Environmental Specification 87
3.10.1 Temperature Range 87
3.10.2 Relative Humidity 88
3.10.3 Altitude 88
3.10.4 Wind 88
3.10.5 Ice Loading 88
3.10.6 Transportability 88
3.10.7 Scanner System Safety 89
3.10.7.1 Safe Failure Mode 89
3.10.7.2 Personnel Safety 89
3.10.7.3 Scanner System Protection and Safety 90
3.10.8 Shock and Vibration 91
3.10.9 Salt Fog 91
3.10.10 Precipitation 91
3.10.11 Solar Radiation 94
3.10.12 Acoustical Noise 94
3.10.13 Spilled Lading 94
3.10.14 Fungus and Moisture Resistance 95
3.10.15 Insects, Rodents, Birds, Animals 95
3.10.16 Electromagnetic Interference and Susceptibility 95
3.11 Power Dissipation and Environmental Control 96
3.12 OACI Cost and Reliability 96
3.12.1 Introduction 96

CONTENTS (Continued)

Page

3.12.2 Cost 98
3.12.2.1 Initial 98
3.12.2.1.1 Present System 98
3.12.2.1.2 Modified System 101
3.12.2.1.3 Experimental System 103
3.12.2.2 Maintenance 103
3.12.2.3 Power Costs 110
3.12.3 Reliability 110
3.13 Other Data - Experimental System 111
3.13.1 Packaging Data 111
3.13.2 Environmental Control 114
3.13.3 Exterior Connections 114

4. QUALITY ASSURANCE PROVISIONS 118
4.1 Dynamic Test Facility 118
4.2 Test Methodology 122
4.2.1 Laboratory Test Significance 123
4.2.1.1 Individual Label Readability Index 124
4.2.1.2 Cumulative Field Readability Distribution 126
4.2.1.3 Scanner System Capability 129
4.2.1.4 Relationship to Laboratory Label Population 131
4.2.1.5 Observation 132
4.2.1.6 Test Label Population Selection 132
4.3 Pretest Setup 133
4.4 Test Results 136
4.5 Concluding Remarks 141

APPENDIX

A. SCANNER SYSTEM A-1
A.1. Electronic Schematic Diagrams A-2
A.2. Z80-MCB and CPU Data Sheets A-35
A.3. Critical Component Data Sheet A-36
A.3.1. Xenon Illuminator And Supply Data Sheets A-36
A.3.2. Photomultiplier Tube Data Sheets A-38
A.3.3. Delay Line Data Sheet A-41

B. TEST RESULTS B-1

C. OPERATIONAL SOFTWARE C-1

D. PROGRAM LISING D-1

LIST OF ILLUSTRATIONS

		Page
Figure 1	Optical Automatic Car Identification System Improvement Potential	5
Figure 2	Typical OACI Installation	7
Figure 3	Scanner System Components	12
Figure 4	Location of Scanning Zone	13
Figure 5	Schematic of Optical Subsystem	14
Figure 6	Color Code Label Interpretations	16
Figure 7	Detector (Standardizer) Operation	18
Figure 8	Standardizer Delay Line Operation	19
Figure 9	First-Stage Optics and Line Driver Modifications	23
Figure 10	Standardizer Modifications	26
Figure 11	"Spikey Signals" from Dirty Labels	29
Figure 12	Bottom Dirt Accumulation Signal	31
Figure 13	Stripe and Blank Space Geometry	32
Figure 14	Averager	34
Figure 15	Single Scan System Block Diagram	37
Figure 16	Two-Scan System Block Diagram	38
Figure 17	Experimental System Block Diagram	43
Figure 18	Digital Label Locator Subsystem	44
Figure 19	Digital Label Locator/Module Processor Subsystems Interface	47
Figure 20	Start/Stop and IMP Calculations	50
Figure 21	Label Recognition Logic	52
Figure 22	TS Counter	54

LIST OF ILLUSTRATIONS (Continued)

		Page
Figure 23	Display Buffer	55
Figure 24	Block Diagram of Module Processor Subsystem	58
Figure 25	Gate Generator	59
Figure 26	Label Signal Timing	60
Figure 27	Block Diagram of the Data Buffer	62
Figure 28	Z80-MCB Block Diagram	68
Figure 29	Optical Schematic - Present System	76
Figure 30	Optical Schematic - Modified System	77
Figure 31	Source Field of View	78
Figure 32	Receiver Field of View	80
Figure 33	Two-Box (Modified) Scanner System Wayside Installation	81
Figure 34	Vibration Induced Vertical Acceleration	92
Figure 35	Vibration Induced Lateral Acceleration	93
Figure 36	Scanner Head Box	115
Figure 37	Signal Processor Box	116
Figure 38	Label Tester	119
Figure 39	Sample Test Facility Printout	121
Figure 40	Label Photographs of Analog PM Data	127
Figure 41	Hypothetical Cumulative Field Readability Distribution	128
Figure 42	Sample System Capability Plot	130
Figure 43	Figure of Merit Computer Output	135
Figure 44	Figure of Merit Rank Order	137
Figure 45	Scanner Modifications	142

LIST OF TABLES

		Page
Table 1	OACI Scanner System Readability and Costs	xiii
Table 2	Code Table for Module Decoder Output	41
Table 3	Shift Register Contents	64
Table 4	Present Scanner Materials Costs (Santa Fe)	99
Table 5	Present Scanner Materials Costs (Canadian National)	100
Table 6	Modified System Retrofit and New Modifications Costs	102
Table 7	Experimental System New Equipment Costs	104
Table 8	Experimental System Installation Costs	105
Table 9	Maintenance Costs - Present System	106
Table 10	Experimental System Maintenance Cost Savings	108
Table 11	Reliability Figures	109
Table 12	Scanner Head Box Contents	112
Table 13	Signal Processor Box Contents	113
Table 14	Scanner Test Results	138
Table 15	Physical Characteristics of Hamamatsu TV Co. Type R777 Photomuliplier Tube at 25°C and Specified Supply Voltage	A-39
Table 16	Figure of Merit	B-2

EXECUTIVE SUMMARY

Within the last ten years, the Optical Automatic Car Identification (OACI) system used by the railroad industry has been a cause for growing concern due to the number of cars which are not correctly read. This concern led to a joint industry/government effort to assess the economic and technical potential for improving the current (standard) OACI system and the potential of alternate Automatic Car Identification (ACI) systems. The information gathered from these assessments will provide a basis for industry decisions regarding the role ACI will play for the U.S. The Federal Railroad Administration (FRA) role within the overall system assessment encompasses the OACI hardware (composed of the label, the scanner, and the wheel sensor) and the management information system aspects. The FRA requested that the Department of Transportation (DOT), Transportation Systems Center (TSC), perform an in-depth study to determine if scanner hardware improvements could increase the percentage of correct readings of the existing labels. TSC was also asked to specify the cost of retrofitting or replacing the existing scanner, and to develop a composite specification for such an improved scanner. Included in this document are both the specification and a description of the work accomplished on the TSC project.

The effort described here resulted in a modification of the system to incorporate advanced electronic signal data processing methods and microprocessor techniques to further increase label readability. The baseline for measuring the scanner hardware improvements was obtained by using current model OACI scanners which were calibrated and tested by the manufacturer to meet their current production scanner performance criteria. Modified scanners were directly compared to these baseline scanners under laboratory conditions to simulate the key aspects of the field conditions. To simulate train movement, a Label Motion Generator was designed and built. It is capable of actual label speeds to 5 mph and, then by electronically limiting the number of scans of each label, it can simulate label speeds to 80 mph. Label height and distance from the scanner can be varied to further simulate the range of label locations on the car fleet.

The laboratory tests were performed with a label population which was a representative selection of marginal and non-read labels provided by the railroads. The labels were selected and correlated with a 1977 field classification performed by the AAR and were based on available fleet information concerning the distribution in percentages of types of labels that are marginal or no-read in the fleet. Percent readability improvements were calculated from actual reads of the labels through the use of a "readability criterion" which is derived from the quality of the unprocessed electronic signal from the label. This method

provides a quantitative method, not dependent upon human training or interpretation, for determining when labels require maintenance.

The modifications have provided significant improvements. The optical modifications have shown a 3% readability improvement over the baseline scanner. The initial electronic improvements have shown an additional 1% readability improvement for a total of 4% over the manufacturer's baseline scanner. All of these improvements can be easily retrofitted into existing scanners at an estimated cost of $4,500* per scanner. Installing these modifications into the existing 500 scanner inventory would require an investment of $2.3 million and would yield a 92% to 95% car label read level. These modifications will have no effect on the yearly maintenance costs, but will reduce the time to repair the scanner systems.

The application of advanced digital electronic techniques and the application of micro-processor technology has provided a further 2% increase in the fleet label readability. Perhaps more importantly, the use of this technology is also expected to reduce the total scanner cost, and improve its reliability. Scanner costs would decrease from the range of $40,000 to $54,000 down to $27,000. At the same time, the average scanner maintenance period can be increased from 30 days to 90 days. This should result in an additional savings in yearly maintenance of $1,700 for each scanner. The above figures are preliminary estimates based on current component prices.

The results of this work in terms of readability and costs are highlighted in Table I. Readabilities are listed indicating scanner performance alone and in combination with the wheel sensors. Capital costs for the new system were derived from prices for 100 unit lots. The field retrofit costs involve installing the modifications in existing scanners in the field. Although the yearly maintenance costs for the wheel sensors remain unchanged at $2,040 per year, the $1,700 per year savings for the fully-modified scanner reflect an improvement in the scanner maintenance period from once per month to once every three months.

In summary, results (refer to Section 4.4) have shown that significant reduction of label non-reads can be accomplished through scanner hardware modifications. Engineering estimates predict potential total fleet readability increases of up to 7% can be achieved with potentially significant reductions in initial scanner procurement costs and maintenance costs.

---

*All dollar amounts given in this document are in 1977 dollars.

TABLE 1. OACI SCANNER SYSTEM READABILITY AND COSTS

SCANNER SYSTEM OPTIONS	READABILITY[1]	NEW SYSTEM[2] CAPITAL COSTS		FIELD[3] RETROFIT COSTS		YEARLY MAINTENANCE COSTS[4]	
		ONE UNIT	500 UNITS	ONE UNIT	500 UNITS	ONE UNIT	500 UNITS
1. FULLY MODIFIED SCANNER	94-97% [5]	$27K	$14M	$17K	$9M	$3.4K	$1.7M
2. PARTIALLY MODIFIED SCANNER	92-95%	$49K	$25M	$4.5K	$2.3M	$5.1K	$2.6M
3. MANUFACTURERS' LATEST MODIFICATIONS	88-91%	$47K	$25M	-	-	$5.1K	$2.6M
4. TYPICAL EXISTING SYSTEM	78-86%	$47K	$25M	-	-	$5.1K	$2.6M

NOTES

1. LOWER LIMITS INCLUDE WHEEL SENSOR AND MAINTENANCE PROBLEMS (ESTIMATED LOSS 3%). UPPER LIMIT IS FOR SCANNER SYSTEM ALONE
2. ONE-HUNDRED LOT BUYS
3. COSTS TO UPGRADE EXISTING SCANNERS IN THE FIELD
4. COSTS INCLUDE 40% MONTHLY WHEEL SENSOR MAINTENANCE AND 60% SCANNER MAINTENANCE
5. PERCENT READABILITIES EXCLUDE CARS WITHOUT LABELS AND MISAPPLIED LABELS

1. SCOPE

This document describes the performance of the Advanced Optical Automatic Car Identification System in sufficient detail so that implementation of a detailed design is possible. "Design-to" military specifications are listed as guidelines and references are given for future research if needed. A complete functional description appears in Section 3.0 with detailed technical description located in Appendix I. This technical description includes information about the scanner system and its subsystems and circuit blocks.

A scanner system description which details interface requirements, operation voltage, and power requirements and other technical characteristics is presented Section 3.8. Section 3.9 outlines design and construction details. Test results are presented in Section 4.4.

2. APPLICABLE DOCUMENTS

2.1 Government Documents

The following documents of the exact issue shown form a part of this specification to the extent specified therein. In the event of conflict between the documents referenced herein and the contents of this specification, the contents of this specification shall be considered a superseding requirement. This report was prepared according to the requirements at MIL-STD-490.

MILITARY SPECIFICATIONS AND STANDARDS

Date	Ref. No.	Description
20 Feb. 76	MIL-D-1000A Amendment #1	Drawings, Engineering and Associated List
15 Oct. 75	MIL-D-1000A	Drawings, Engineering and Associated List
15 Oct. 70	MIL-STD-454C	Standard General Requirements for Electronic Equipment
1 Aug. 68	MIL-STD-461D through notice #4	Requirements for Equipment Electromagnetic Interference Characteristics
15 Feb. 66	MIL-STD-971	Maintainability Demonstration
15 June 67	MIL-STD-810B	Environmental Test Methods
15 Nov. 67	MIL-STD-781B	Reliability Test Exponential Distributions
28 Mar. 69	MIL-STD-785	Requirements for Reliability Program

2.2 Non-Government Documents

31 January 1977	Automatic Car Identification (ACI) System Specification for American Railroads; Association of American Railroads, Research and Test Department, System Studies Division
1 January 1975	Automatic Car Identification Manual; Association of American Railroads, Operation and Maintenance Department, Mechanical Division

2.3 References

1. H. C. Ingrao, "Optical Automatic Car Identification (OACI), Field Test Program," Report No. FRA/ORD-76/249, U. S. Department of Transportation, Transportation Systems Center, May 1976.

2. "Optical Automatic Car Identification: An Evaluation of the Current System," Gellman Research Associates, Jenkintown, PA, June 1977.

3. "Optical ACI -- A New Look," R. Wiseman, H. Ingrao, W. Cracker, 14th Annual Railroad Engineering Conference, Pueblo, Colorado, October 1977.

4. R. Wiseman, "Optical Automatic Car Identification (OACI), Scanner System Performance and Cost Improvements," Interim Report No. FRA/ORD-77/38.I, June 1977.

5. Summary Report, "A Study to Analyze and Define Alternative Approaches to Automatic Car Identification," ARINC Research Corp., Annapolis, MD, June 1977.

6. D. D. Buss, W. H. Bailey, and D. R. Collins, "Analysis and Applications of Analog CCD Circuits," Proc. 1973 Int. Symp. Circuit Theory, Toronto, Ont., Canada, April 1973, pp. 3-7.

7. D. Torrieri, "Adaptive Thresholding Systems," IEEE Transactions on Aerospace and Electronic Systems, Vol. AES-13, No. 3, pp. 273-279, May 1977.

8. Bennett, I., "Monthly Maps of Mean Daily Insulation for The United States," Solar Energy, Vol. 9, No. 3 (1965).

3. REQUIREMENTS

3.1 Introduction

This report presents the recent results of efforts on the part of the federal government to determine the improvement potential for the Optical Automatic Car Identification (OACI) system (see Figure 1). The efforts, carried out under the technical support of the Federal Railroad Administration (FRA), are intended to specify the means for obtaining increased OACI system accuracy and wider application at lower costs. Although OACI has the potential to be a major breakthrough for improving railroad service operating efficiency and car utilization, the nation's railroads have recently reconsidered continuation of its use. Since its adoption on a national scale in 1967, the railroads have been faced with the problem of sustaining an effective maintenance program for the OACI system and the labels of 1.7 million freight cars which are used for identification purposes. Depending on the operating life of the label, the operating environment and the levels of maintenance over the past five years, reported OACI readability has varied from 78% to above 97%. Although some railroads find that the lower accuracy can be greatly enhanced through correlations with their separately-derived manual car identification records (advanced consist), others find this reduced level of performance to be unsatisfactory. The main reason for this difference in acceptance lies in the way each railroad utilizes OACI in their management information system (MIS). Some railroads, with their

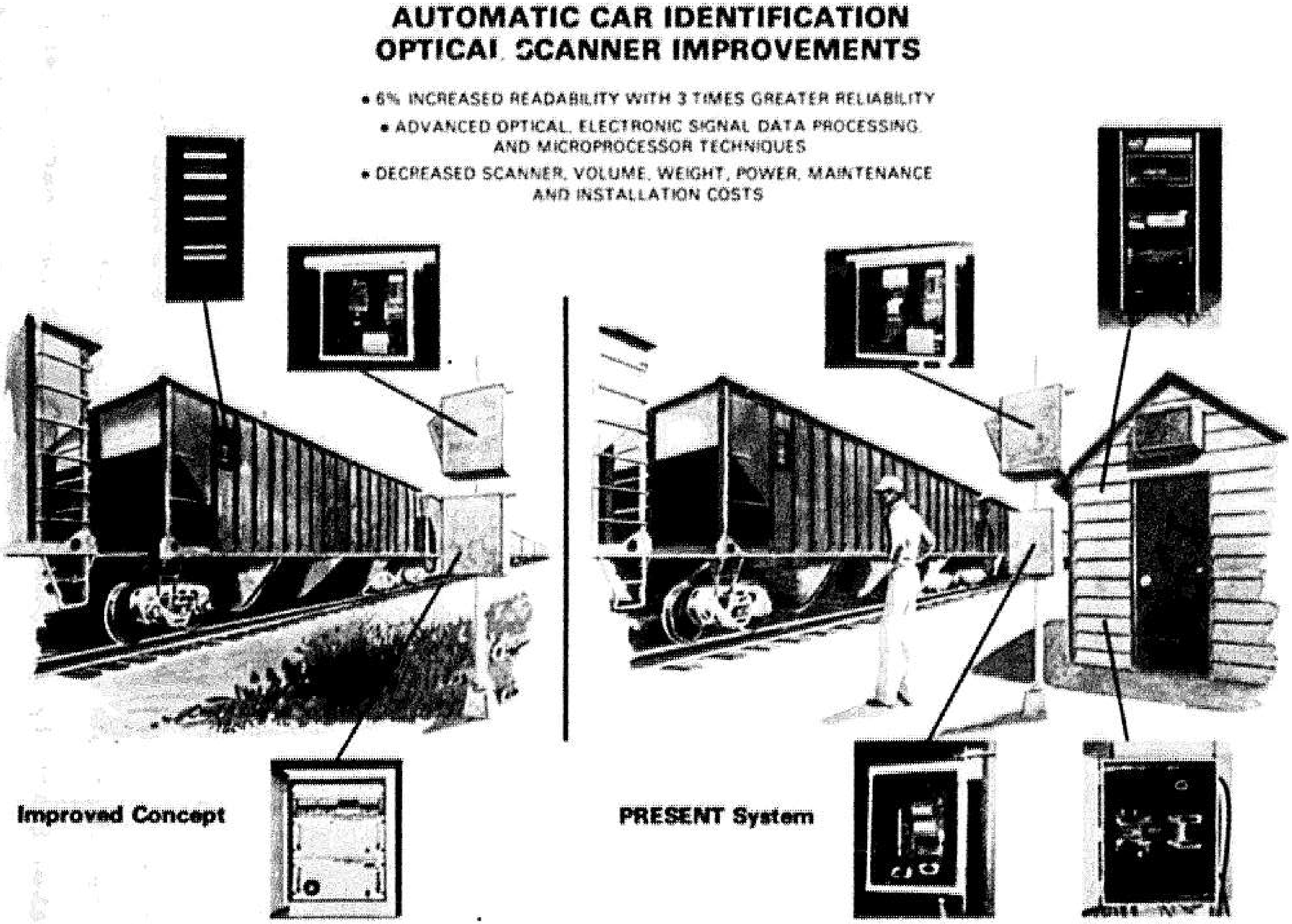

FIGURE 1. OPTICAL AUTOMATIC CAR IDENTIFICATION SYSTEM IMPROVEMENT POTENTIAL

own maintenance program and fleets, have derived significant benefits from greater efficiencies in their waybill preparation, classification yard operation, and cargo identification. However, since the nationwide benefits of ACI can be obtained only through the cooperation and support of all railroads, its fullest potential cannot be realized unless a sufficiently convincing case is made for improved performance and lower operating and maintenance costs to demonstrate an acceptable return on investment.

3.2 Background

Since 1890, when a patent was issued for a mechanical technique, the railroads have recognized a need for the automatic identification of the ownership and serial number of freight cars passing critical rail junction points. In 1967, the optical ACI was adopted as the industry standard after the Association of American Railroads (AAR) had developed specifications and tested the system in the field. Referring to Figure 2, the OACI system was composed of three distinct elements: (1) Color-coded labels; (2) An optical trackside scanner system; and (3) Wheel sensors to determine car presence and direction. The system operates in the following manner. When the train first approaches, a high intensity light source is turned on and begins a rapid vertical scan of the trackside with a set of rotating mirrors. The wheel sensors then identify the passing of the rail car, each of which has labels mounted on both of its sides. The label consists of

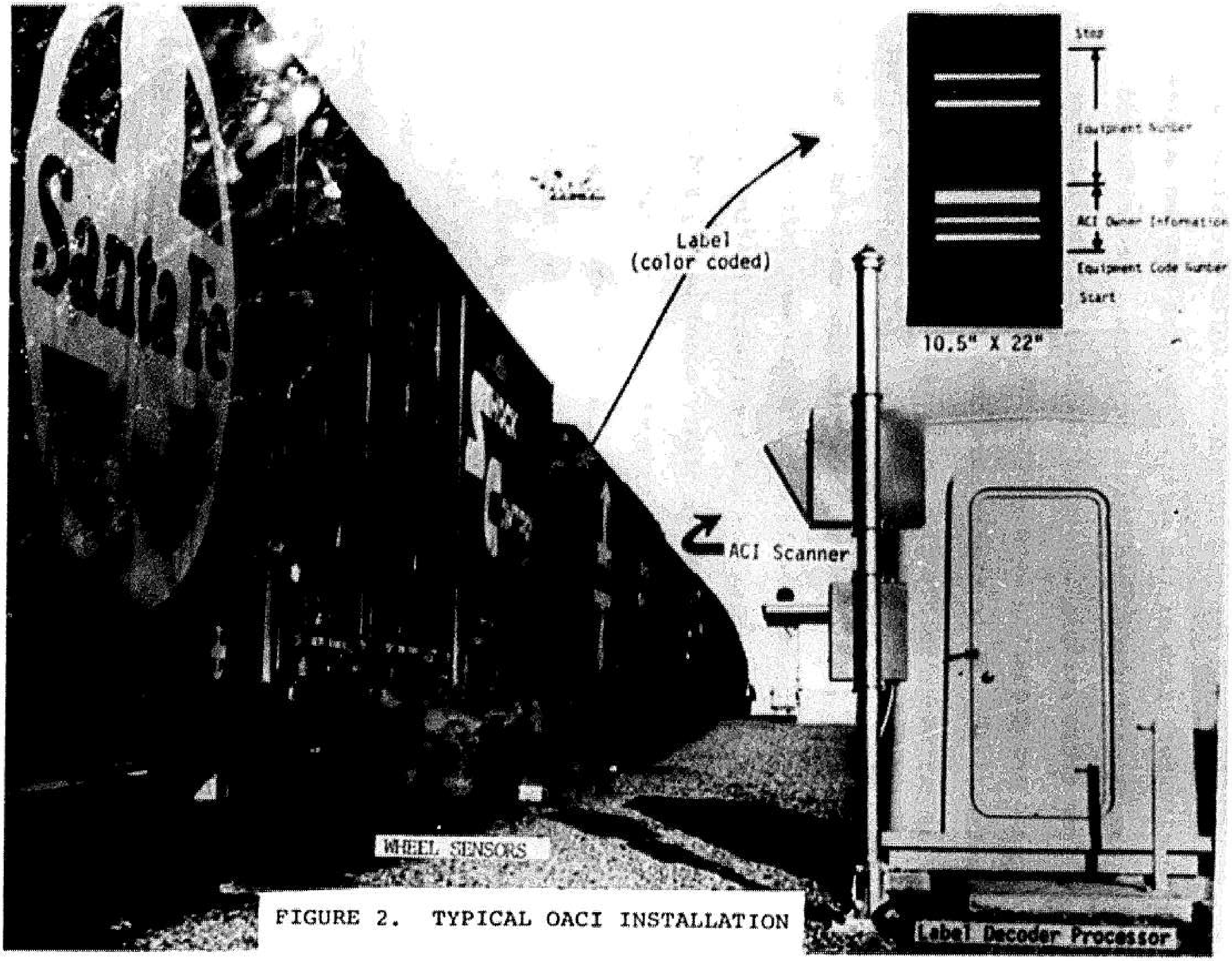

FIGURE 2. TYPICAL OACI INSTALLATION

thirteen "modules" which are strips of retroreflective material similar to that used for highway markers which are illuminated by car headlights. Each of the thirteen modules has two stripes, which are colored white, red, blue, or black. The reflected light from these stripes is sensed slightly off the incident light axis and converted into electrical signals by photomultipliers. These signals are then decoded into three digits of car owner information and seven digits of the freight car/type number. If this information satisfies certain validity criteria it is passed on to a label data processor for subsequent transmission to the railroad's local management information system computer. Validity for the ten identification digits is checked against a modulo-eleven binary coded parity module.

In the past, use of the OACI system's information has varied considerably depending on the size and the special needs of the railroad. One very large network managed by the Chicago Railroad Terminal Information System, Inc. (CRTIS), was developed as a joint railroad effort to serve 28 users over 7,689 miles of track connecting 100 freight car classification and support yards. For the last five years, the FRA and twelve railroads were involved in a cost-shared CRTIS demonstration of the benefits of OACI in reducing clerical costs, car detention times, misroutings, and classification errors. This project to date has had limited success due to: (1) a degradation in the quality of the labels; and (2) a less than optimum scanner system performance. In 1975, concern over the slowly deteriorating OACI readabilities led to an FRA-sponsored CRTIS field test program[1] which was conducted by the Department of Transportation's Transportation Systems Center (DOT/TSC) at the request of the FRA. The tests indicated that the readabilities could be increased from the national average of 80% to 91.3% through minor improvements to the OACI scanner system by the equipment manufacturers. Although the field test sample of over 5,000 cars was quite large, this result was the subject of considerable controversy. Some railroads believed that the test site was not representative of their own OACI experience. Others reported that readabilities of higher than 95%[2] were obtainable through a careful label washing program on their own captive fleets. The problem was further complicated when each railroad tried to assess the readability effect in terms of the costs and benefits of their own operations. Very little technical information was available on the effective life of the labels and the underlying causes for their deterioration. Readability improvements through "advanced consist"* and multi-scanner correlations from both sides of a car had not been systematically defined in a form which could be interpreted by each individual railroad. These and other problems established a "wait-and-see" environment in which the static market for OACI systems precluded any major technological upgrading by the equipment manufacturers.

---

*<u>Advanced</u> <u>Consist</u> - defined as manual car identification records for a train available to the railroad prior to train arrival.

In order to evaluate the ACI system, the FRA was asked to determine the improvement potential of OACI while the AAR investigated the benefits that would be derived from good car identification. For the past year, the FRA has been working on four areas of the Optical ACI System to resolve its major issues and to provide a firm basis for the railroad industry's decision regarding its future use and deployment. One of these areas, described as an extensive effort to improve the performance and cost of the scanner system, has been conducted by DOT/TSC. The results of a first stage of fabrication and testing of newly designed pre-prototype hardware in this effort were presented* to the industry in June 1977. This report summarizes that effort and presents a specification for the improved scanner system. Also presented is an analysis of the current system, an identification of the levels of improvements, the results of laboratory testing, and cost and sizing considerations.

3.3 Current Scanner System Description

The existing OACI Scanner System is composed of optics of good commercial quality and vintage 1969 electronics components. The system was originally designed to identify 99.5% of new or properly maintained labels with the low false alarm rate of less than 1 part in 250,000. However, in actual use label degradation in the form of dirt, damage, and other causes has reduced the light returns from some of the labels to the point where they are obscured by the system noise. For the purpose of identifying readability improvements with the existing labels, the scanner system (Figures 2, 3) may be divided into four parts: an optics subsystem; front-end amplification electronics; a detector (called a "standardizer"); and a label data processor.

The detection of a label starts when its vertical edge first appears in the plane of the label scanning zone shown in Figure 4. The label is illuminated in this zone by a 7.5 inch circular beam of collimated light from a Xenon arc lamp within the scanner head. This incident light is swept upwards by four mirror faces mounted on a "spin cube" which rotates at 3600 rpm. This rate is high enough to insure at least one scan of a label moving at 80 miles per hour. The rotating plane is tilted 7 degrees about the vertical axis to accent the label's retro-reflective properties over non-label specular reflections which are dominant for the return path perpendicular to the car side. The labels contain very small glass beads mounted on a silvered surface which reflect light back within a small two degree cone centered on the axis of the incident beam. This effect may be seen by observing a label illuminated with a flashlight at angles which can be as much as 45 degrees off the normal to the label.

The optics subsystem is shown in Figure 5. A mirror is used to "fold" the incident light from the arc source on its way to the rotating mirrors. A hole in this pierced mirror admits the return light to a lens system which focuses it on the cathode of red and blue channel photomultipliers (PM's). The PM receivers have a vertical field of view of 3/8" for good label stripe

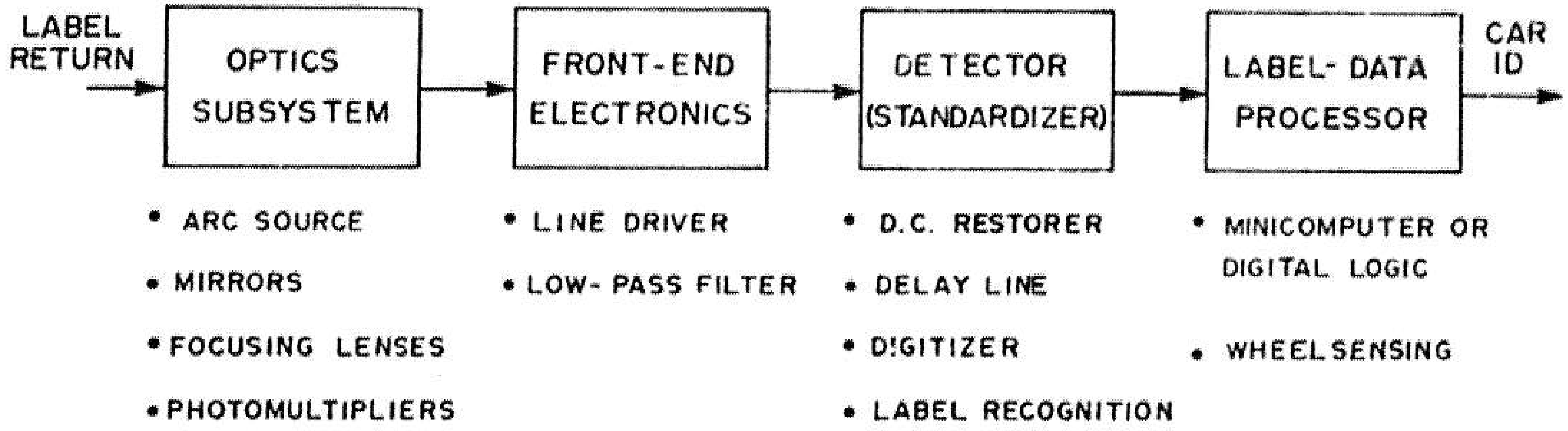

FIGURE 3. SCANNER SYSTEM COMPONENTS

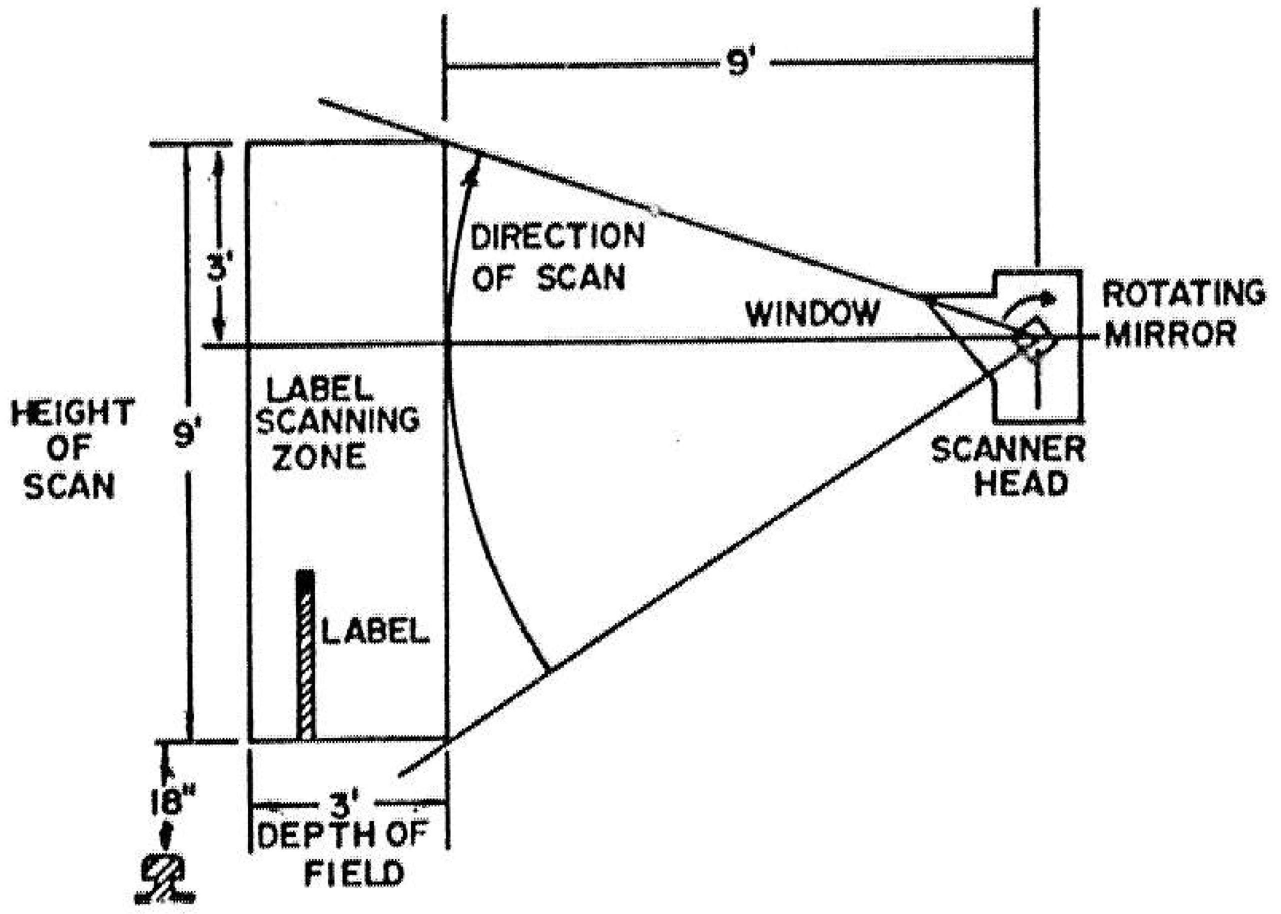

FIGURE 4. LOCATION OF SCANNING ZONE

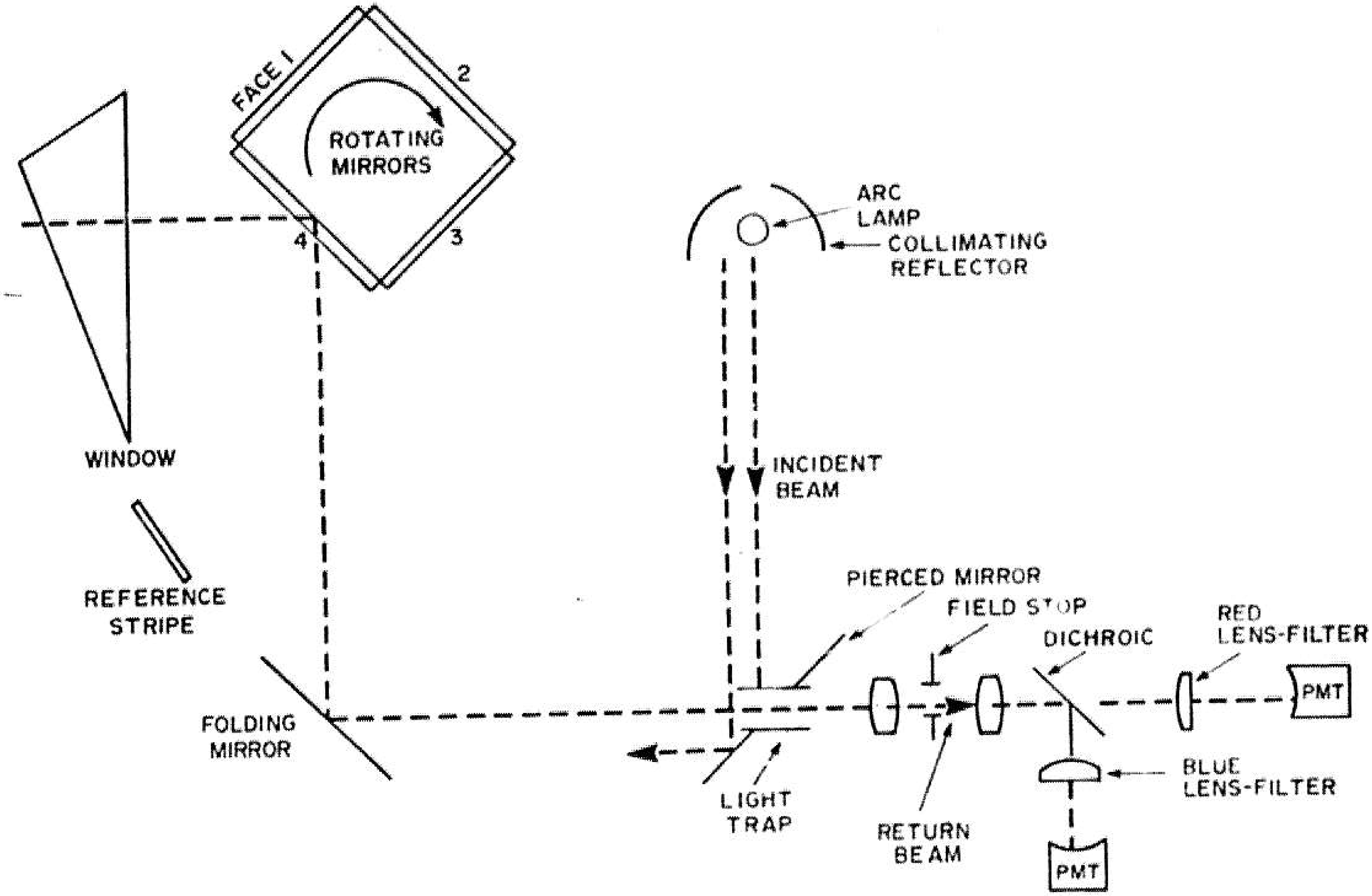

FIGURE 5. SCHEMATIC OF OPTICAL SUBSYSTEM

resolution. Color separation is achieved by a dichroic mirror which passes the red band of light but reflects the blue band at 90 degrees. A white label module will therefore produce a PM output on both channels. The red and blue filters are narrow-band and are matched to the spectral characteristics of the label colors. An example of these waveforms and the color code interpretation is shown in Figure 6. There are 16 possible color combinations for each full module (four times four for each half module). Of these, only ten are used because of the restrictions that no bottom stripe be black and that the red/blue and blue/red modules are reserved for the "start" and "stop" modules, respectively. The label background-to-module spacing ratio of 6 to 5 provides a near-zero return between the signal pulses of adjacent modules.

As seen in Figure 3, the red and blue photomultiplier outputs are each fed to a separate line driver and 400 kHz low pass filter combination with a dynamic range of 50 db. The line driver outputs present low impedance 30 mV to 10V label signals to the detector which is mounted in the air conditioned Label Data Processor equipment hut. The hut also contains a power and signal interface box.

Since the purpose of the OACI system detector is to assure that only label analog signals result in an identification of a freight car, this device has been more appropriately called a standardizer. The standardizer eliminates false information from non-label reflections and assures the proper decoding of label

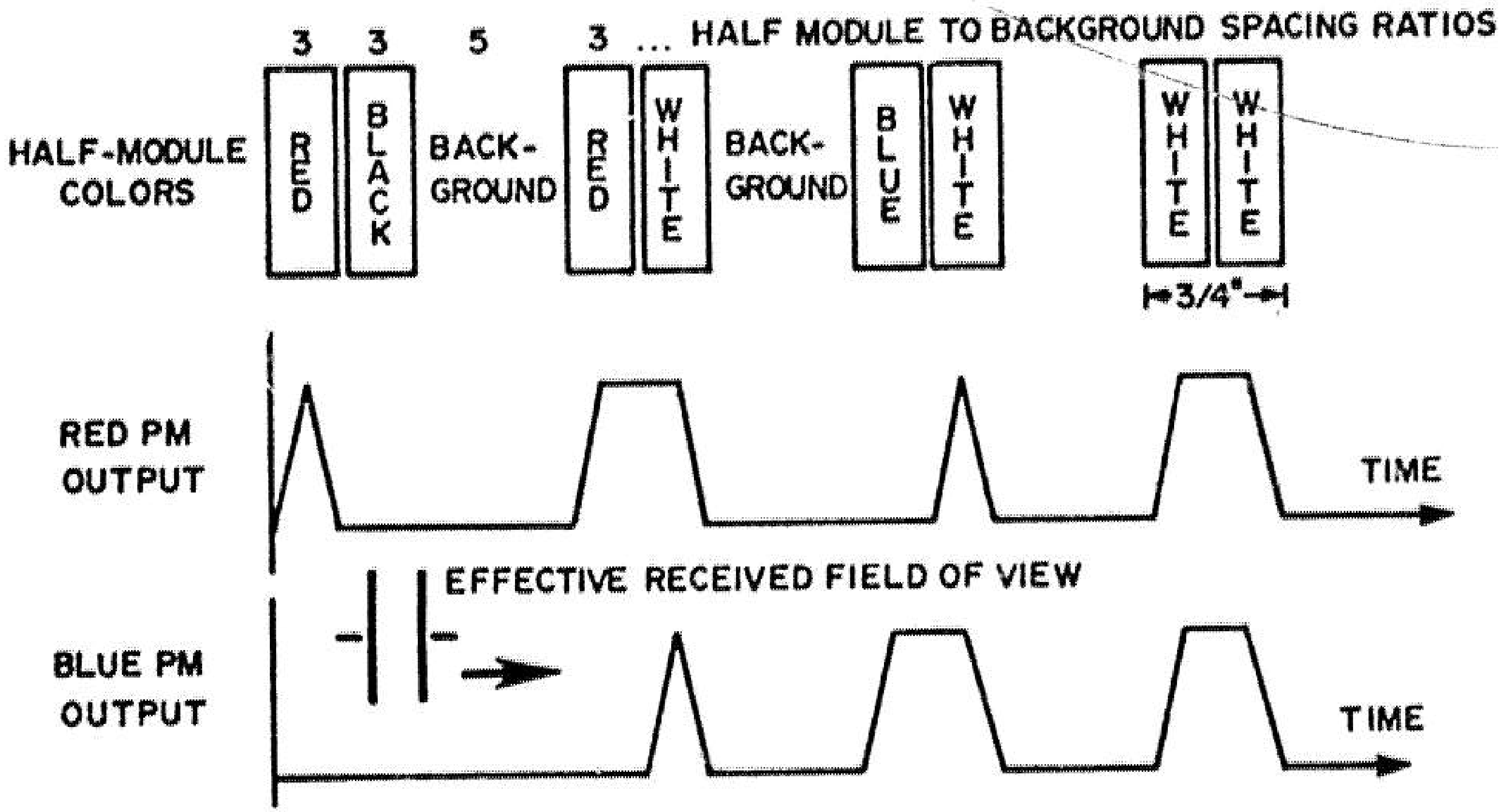

FIGURE 6. COLOR CODE LABEL INTERPRETATION

signals through the use of DC Restorer circuitry, a delay line, a digitizer, and stripe/label recognition logic. As shown in Figure 7, the triangular and trapezoidal photomultiplier signals arrive at the standardizer with rounded edges due to a non-ideal label reflectivity, optical and electronic bandwidth limitations, and system noise. DC Restorer circuitry first amplifies and shifts the level of the signal pulses so that they rise from a fixed DC reference level which is relatively independent of the slow variations in the outside ambient light. The ultimate objective is to convert these analog pulses into digital pulses with the same half or full module widths and relative spacing. This objective is realized through the use of a lumped-constant transmission line which continuously tracks the instantaneous analog pulse amplitude over delayed time intervals. This pulse delay line is shown in Figure 8 and contains ten signal tap outputs with tap weight multipliers. The 9 microsecond "times-one" tap and the two 0.5 taps assure that a digital pulse is formed from the half-amplitude points of the analog label pulse regardless of its peak amplitude (the reflectivity strength) or waveform width (the label distance from the scanner). Other taps farther away from the X1 center tap provide amplitude guardbands which inhibit a digital pulse when adjacent module peak amplitudes or spurious noise spikes are more than ten times greater than the center peak. The center tap voltage is also inhibited when it goes below a 50 millivolt DC threshold or when it falls below 0.2 times a "crosstalk" signal from the center tap

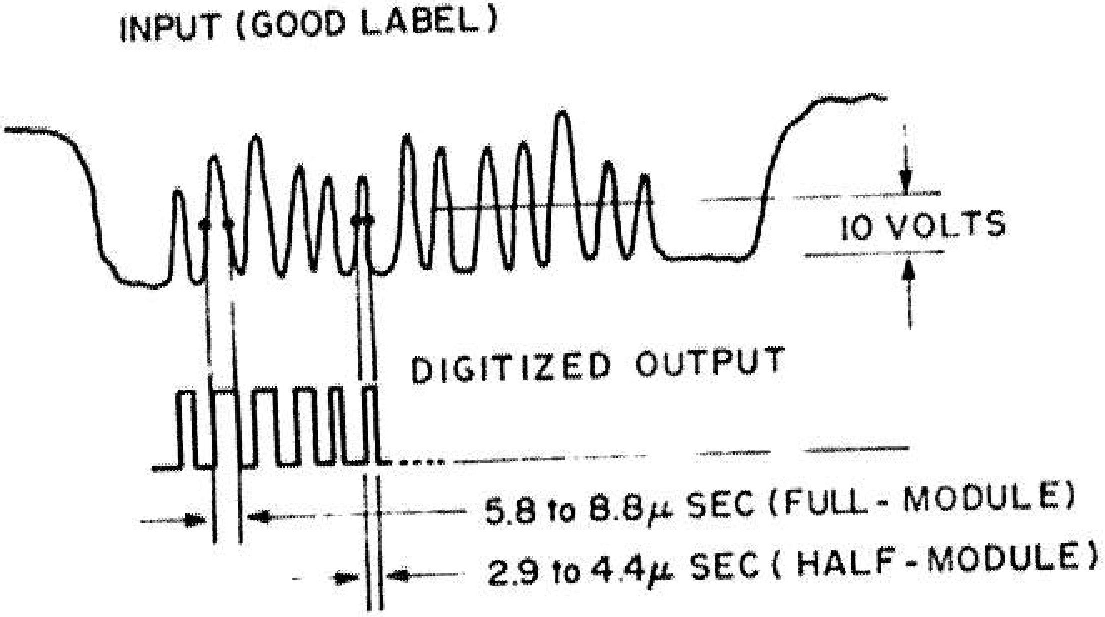

FIGURE 7. DETECTOR (STANDARDIZER) OPERATION

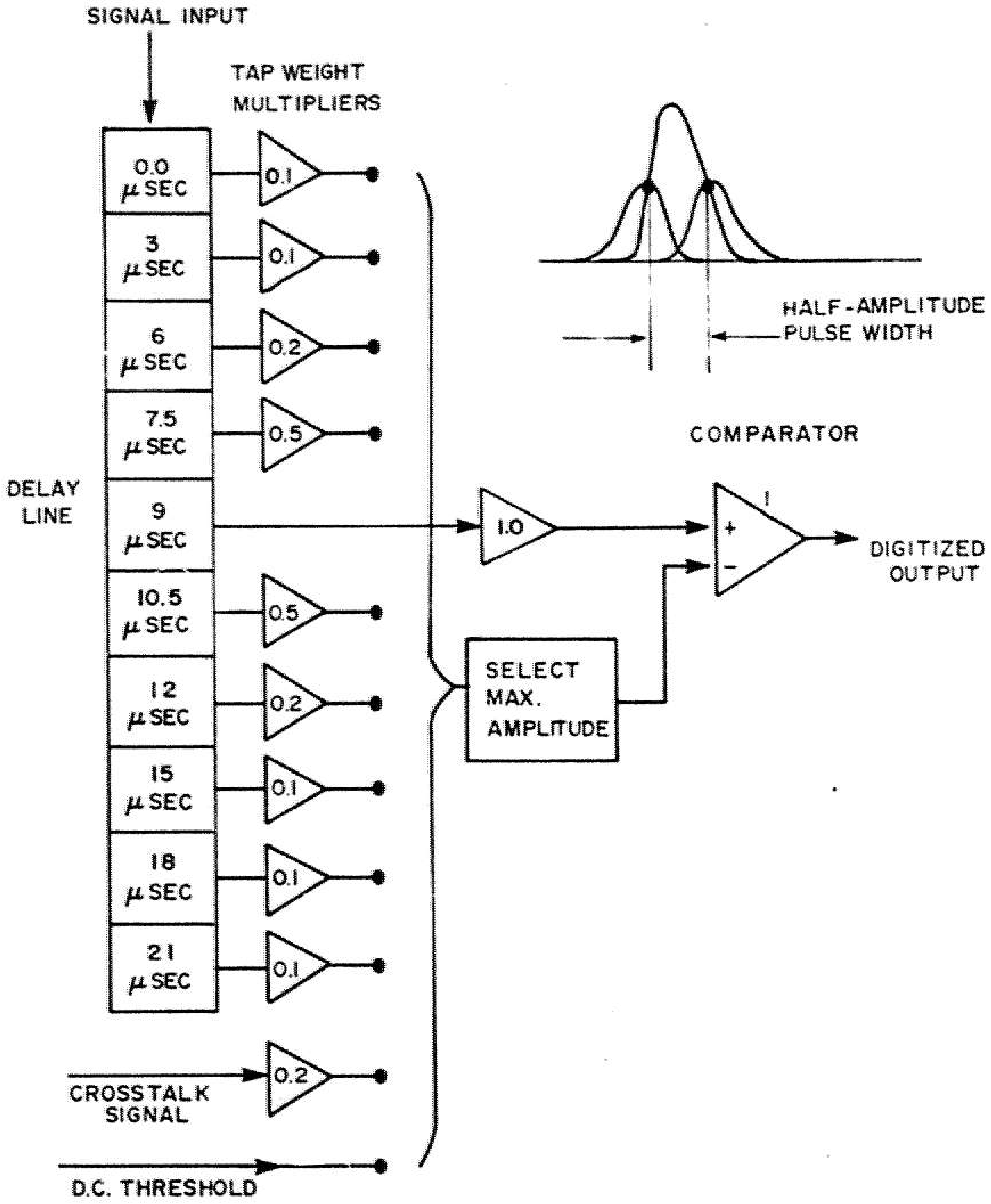

FIGURE 8. STANDARDIZER DELAY LINE OPERATION

of the other channel. The crosstalk signal prevents a white color decision when one color produces a signal less than 1/5th of the others.

The digitization of the red and blue label pulses is directly followed by two stages of Label Recognition Logic. The first stage examines individual half-module pulse widths and determines red and blue coincidence. These are assembled to arrive at a full-module numerical code which is checked for maximum pulse width and maximum distance from adjacent modules (which should always have at least one channel pulse in their first half module). If these conditions are not met, any preceding pulses are classified as noise and the circuitry is reset.

The second stage of label recognition checks more global information about the label, verifying that the pulse train consists of a "start" module followed by 10 numerical modules; a "stop" module, and a "parity". If any module is missing, all preceding pulses are discarded as noise. If the pulse train satisfies all of the preceding conditions for a label, the label numerical codes are loaded into memory in the Label Data Processor.

The Label Data Processor verifies the label parity, checks for multiple scans of the same label, and uses the wheel sensor signals to identify each car and watch for cars with no labels. For each train, a list is then assembled and printed or transmitted to a remote computing site.

3.4 Scanner System Improvements

In its simplest form, the modification of a scanner system to achieve improved readability of degraded labels involves two tasks: (1) The dynamic range must be extended downward to read smaller optical returns; and (2) The effects of noise, either on the label or internally to the scanner must be reduced. That is, the system gains for new labels are maintained while improvements are made to identify very small signals from degraded labels in the presence of noise. This noise has three primary sources: (1) background noise from the label; (2) noise from the scattering of internal light; and (3) electronic noise. With this in mind, the problem was defined and two stages of modifications to the scanner optics, electronics, and label detection subsystems were identified.

3.4.1 First Stage Improvements

The first stage improvements involved:

1. improving the optical system
2. increasing the dynamic range of the front end line driver
3. stabilizing the thresholds for the existing standardizer.

These modifications were intended to be an early package which could eventually be retrofitted in the field by the manufacturer at a cost of $4,500 (approximately 10% of the initial purchase price of the scanner system). The first stage hardware has been designed, fabricated, and tested in the DOT/TSC laboratory. The tests simulated the key aspects of the conditions in the field and were performed with a label population which was a representative selection of marginal and non-read labels provided by the railroads. These modifications were installed in a scanner system and directly compared to another scanner which had the manufacturer's latest improvements and a known readability of 91.3% established from field tests.[1] The comparison revealed that the modifications produced a readability improvement* of over 4%.

3.4.1.1 Optics Modifications

The optics modifications are shown in Figure 9 and are described as follows.

1. A new arc source manufactured by Varian, Inc., has been substituted to obtain a brighter rectangular beam of light on the label. The beam height has been reduced by a factor of two while maintaining an optical collecting and focusing system of the same f-number as that currently used. The lamp assembly contains a secondary optical system with a well-defined illumination beam which results in less internal light scattering. Although the new source is more expensive ($475 vs. $375), it has a 60% longer lamp life and can be more easily replaced, requiring less special alignment time and skill.

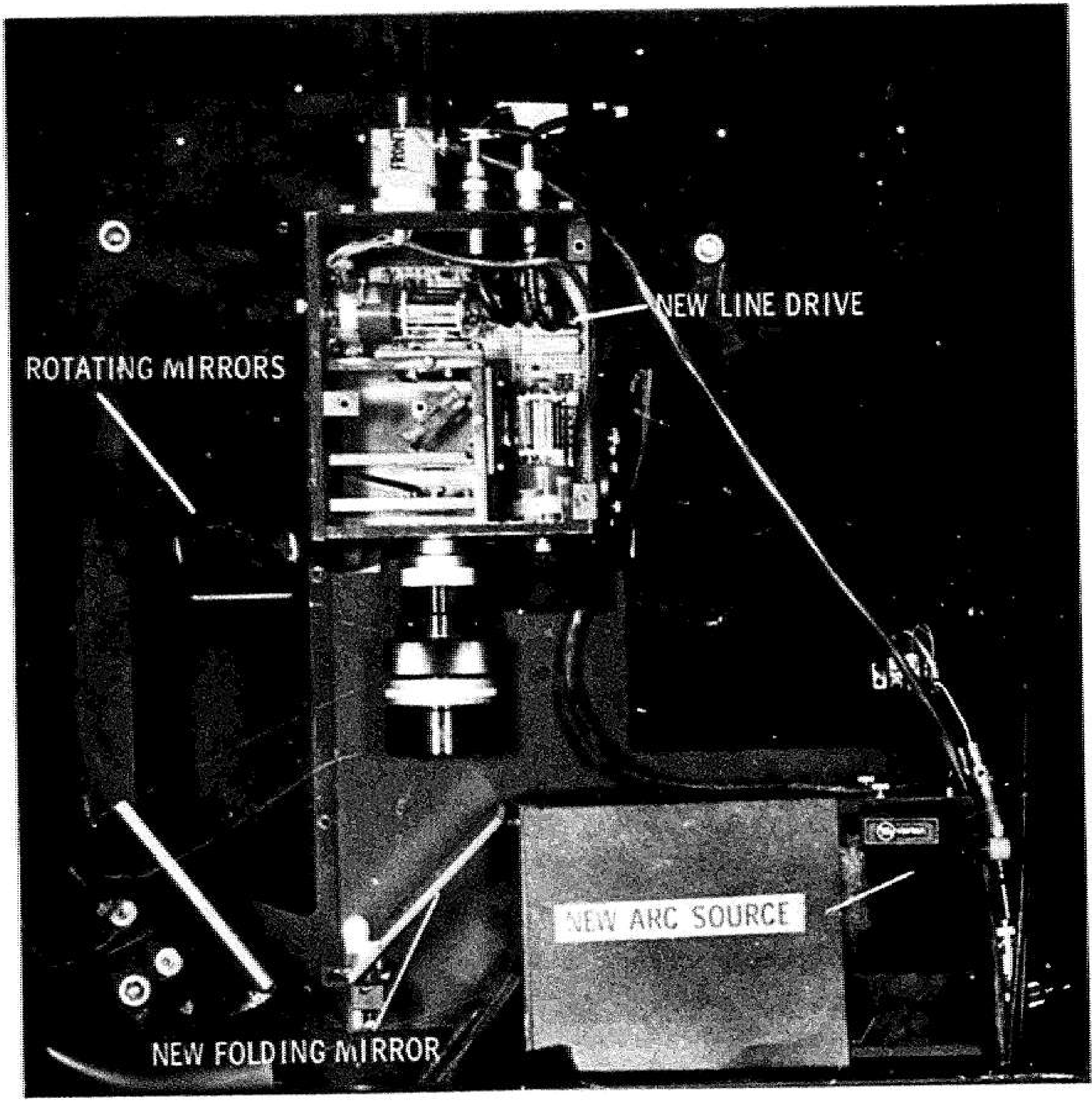

FIGURE 9. FIRST-STAGE OPTICS AND LINE DRIVER MODIFICATIONS

2. A half-silvered mirror has been installed in place of the present pierced mirror. The new mirror and a larger, more expensive lens ($260 vs. $60) increase the light returns on the photomultipliers.

3. Flatter folding and rotating mirrors have been installed (at negligible additional costs) to obtain better resolution and more repeatable scan-to-scan module pulse times from the label. These mirrors also operate in conjunction with a small lens to obtain a synchronization pulse with a .05 microsecond stability for the advanced detection processor applications. The sync pulse is obtained from a reference module placed inside the scanner and slightly below the bottom of its viewing window. This module can also be used for optical thru-put checks and photomultiplier gain stabilization similar to that already provided in the present scanner.

3.4.1.2 Line Driver Improvements

The new line driver has an increased dynamic range of 80 db which should be sufficient for the weakest (1 millivolt) returns from very degraded labels. The driver has integrated circuit operational amplifiers in place of transistors to achieve a higher immunity to temperature and power supply variations. The optics modifications and the new line driver have resulted in a 3% readability increase and have reduced the internal light scattering to the point where the dominant noise (of approximately 3 millivolts) is from the background material and deterioration of the label itself. An additional 1% improvement was obtained through modifications to the existing standardizer at an incremental cost of $1,250.

3.4.1.3 New Standardizer

The new standardizer is shown along with the present one in Figure 10 to indicate that the breadboard electronics were well constructed and are direct plug-in replacements for the existing circuitry. The purpose of the modifications was to increase the dynamic range by a factor of 3 (from 46 db to 56 db) and to provide a stable threshold for degraded label signals in the region of 5 millivolts. The stability was obtained through the substitution of integrated circuit operational amplifiers for the transistor summers used in the tap weight multipliers (see Figure 8). This substitution reduced the threshold temperature sensitivity by a factor of four (from 12 mv to 4 mv, 0 to 50°C) and resulted in a better immunity to power supply variations (from 15 mV/V to 1 mV/V). Signal reflections in the delay line were also reduced through high impedance buffering at the inputs to the tap weight multipliers.

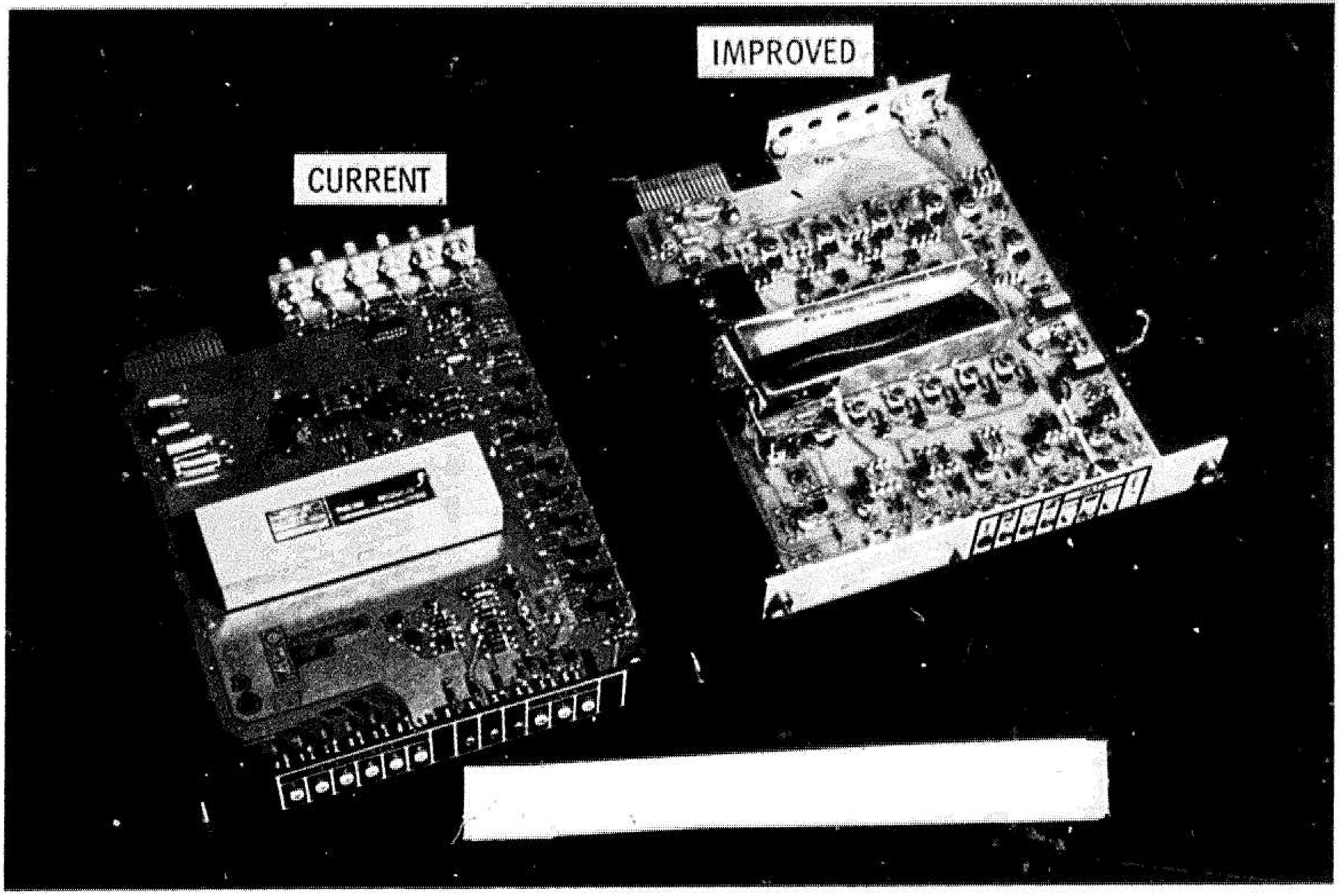

FIGURE 10. STANDARDIZER MODIFICATIONS

3.4.2 Second Stage of Improvements

Second modifications have been designed and implemented to replace the standardizer and the Label Data Processor minicomputer with a new detector and multi-scan correlation in a microprocessor based system. These modifications build upon the optics and line driver improvements of the First Stage and take advantage of recent advances in signal detection techniques and integrated circuit technology. These modifications were verified as feasible and, according to laboratory tests, produce an additional 2% increase in readability. This system has involved a major reconfiguration of the present four-box system with its air-conditioned hut into a two-box system mounted entirely on the scanner wayside pole. This and the use of integrated circuits reduces the initial costs of the scanner system from the present $40,000 to $54,000 range down to an estimated $27,000. The system reliability and maintainability have been improved, with scanner maintenance costs reduced from $5,000 to $3,400 per year.

3.4.2.1 Problem Definition

The second stage of modifications began with an assessment of the capabilities of the present standardizer and Label Recognition Logic. The present subsystems were designed to identify labels which had signal returns as low as 1% of those from a new label. However, a significant number of the degraded test labels received from the railroads had pulses more than ten times lower (5 millivolts) than this threshold and, in some cases, were barely distinguishable from the background noise. In addition to the threshold limitation, the unusually strict requirement on false alarm rates had led to a design in which partial label reads were discarded during each scan with no provision for scan-to-scan correlation. This situation, and recent advances in microcircuit technology, suggested a major modification of the system detector. Also, the use of a microprocessor and memory could allow for the utilization of partial label data in a scan-to-scan correlation scheme.

3.4.2.2 System Considerations

3.4.2.2.1 Signal Characterization

The new optics design proven feasible at DOT/TSC has decreased the noise from internally scattered light to the point where it is no longer a significant limiting factor in the present design. The choice of photomultiplier and front-end amplifier fixes the electronic noise level. An examination of the present system signal characteristics shows that the system is not white-noise limited. Instead, as the labels get more dirty the signals are not greatly attenuated but become "spikey" (as an example of this see Figure 11). Unfortunately, this is precisely the type of signal with which the present system is least able to cope (see manufacturer's description of present OACI system Pulse Standardizer).

Another characteristic of the signal return from dirty labels is that the return is stronger at the top of the label

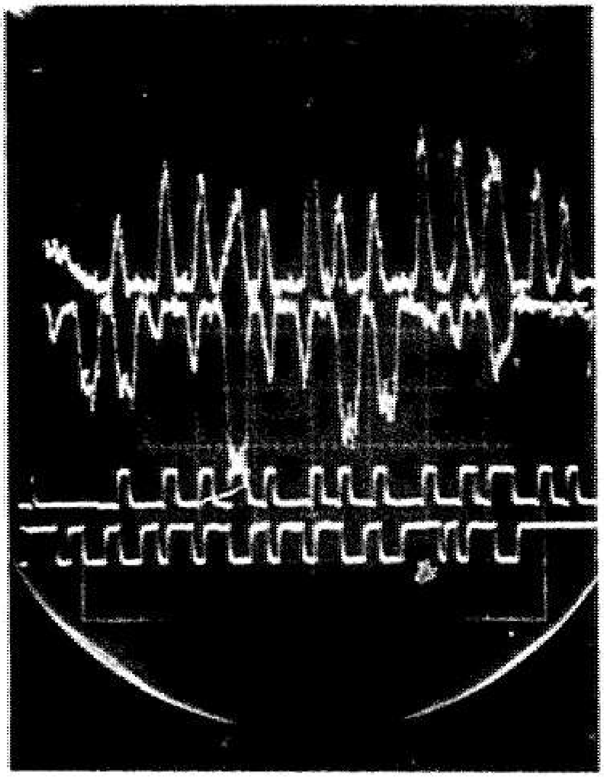

FIGURE 11. "SPIKEY SIGNALS" FROM DIRTY LABELS

than at the bottom. This is attributable to the fact that the bottom of the label tends to accumulate more dirt than the top (see Figure 12). This spatial attribute of the signal causes the present system to reject readable labels because it cannot read the start pulse.

The requirements for system improvement are (1) to improve the detection of the stripe signals within this spikey noise environment and (2) to collect and use partial label information.

3.4.2.2.2 Filtering and Detection

The noise characteristics of degraded labels are difficult to describe analytically. However, a straightforward way of attacking the problem of filtering and detection is as follows:

1. The signal plus noise within a stripe window T(s) (see Figure 13) is averaged.
2. The noise in the Black Spacer window T(b) is averaged.
3. The differences in the averages of 1 and 2 are compared to determine the presence or absence of a colored stripe.
4. The relative magnitude of these averages are compared between modules for both the red and blue channels. Using these comparisons the module is decoded.

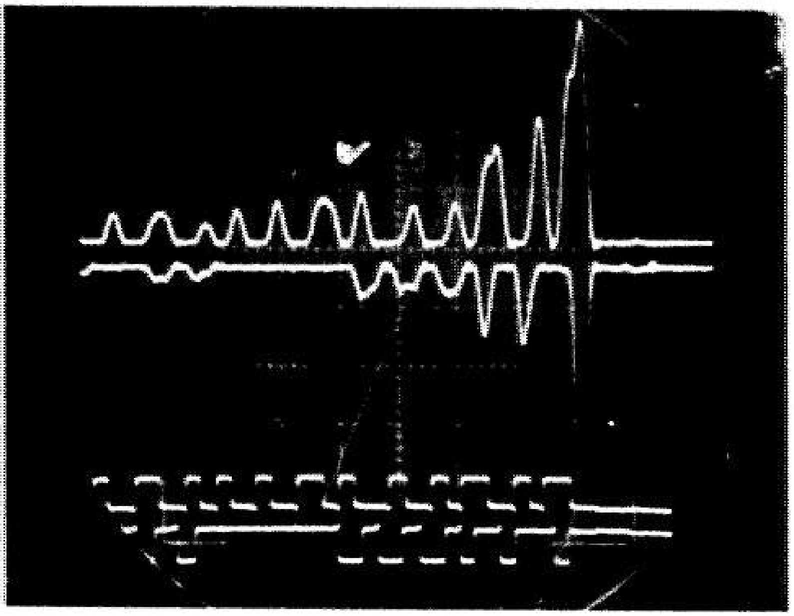

FIGURE 12. BOTTOM DIRT ACCUMULATION SIGNAL

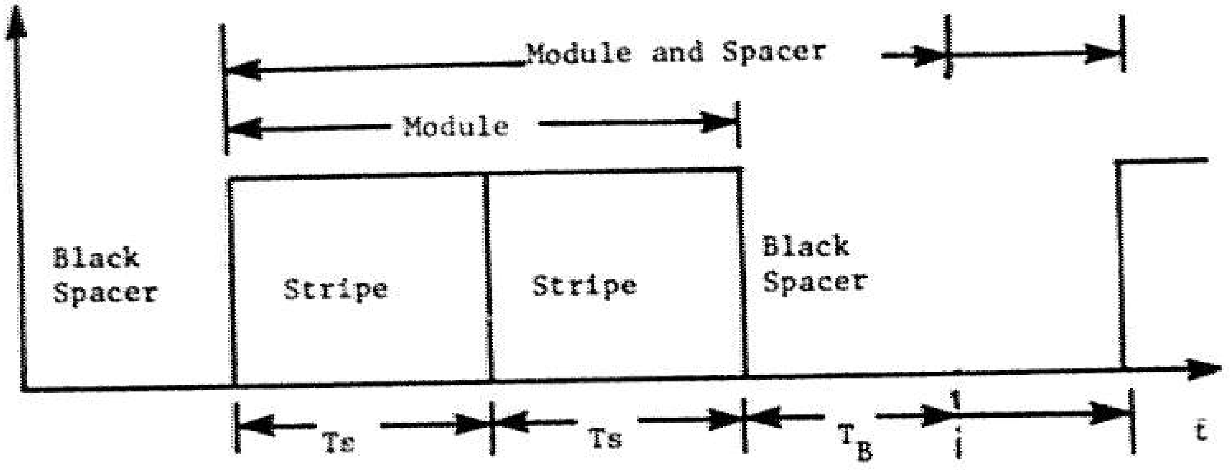

$$2T_S/T_B = 6/5$$

Signal Stripe, (Ts); and Spacer Windows (T_B) vs. Time, t.

FIGURE 13, STRIPE AND BLANK SPACE GEOMETRY

3.4.2.2.3 System Implementation

A number of problems are immediately apparent when one tries to implement the filtering and detection scheme described above. These are as follows:

1. The decision threshold voltages for deciding the presence of a color stripe, based on the averaging techniques discussed above, must be significantly more sensitive than that employed by the present system. Significantly lowering the threshold margin will cause increases in false label readings unless the process is gated ON (Enabled) only during the presence of a label and in synchronism with the code modules.
2. The stripe and spacer time windows, T(s) and T(b) (see Figure 13), vary as a function scanner range and angle. The "ideal" averager, assumed to have an impulse response h(t) as shown in Figure 14, has an averaging period, T_0, which varies with range and angle.

A number of feasible systems have been proposed to solve these problems, two of which will be briefly described here.

3.4.2.2.4 Examples of Implementation

3.4.2.2.4.1 Single Scan System

This system concept can be conveyed with the help of Figure 15. This system has four major subsystems.

1. Red and Blue Channel receivers.
2. The Label Locator.

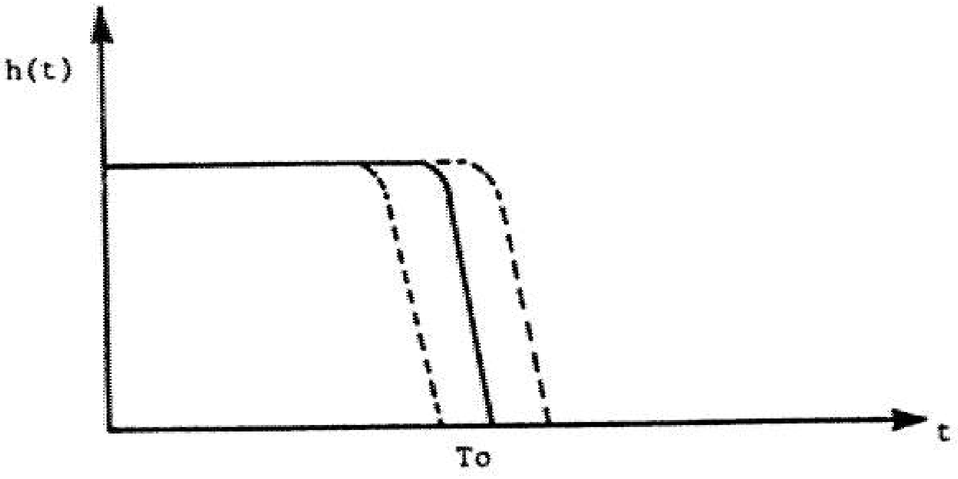

Averager with Variable averaging period -- To

FIGURE 14. AVERAGER

3. Module Processor.

4. Post Detection Processor.

The receivers pre-condition the red and blue signals. They are composed of the photomultiplier tubes, line drivers, and filters.

The label locator has an input which is the sum of the red and blue photomultiplier receiver signals. This signal is passed through a low pass filter with a cut-off frequency of 200 kHz [f = 1/T(min)] where T(min) is the minimum pulse width of a stripe module - approximately 5 µsec. The filtered signal is then threshold detected creating a series of equal amplitude pulses. The long coherence time of this signal is well suited for the matched filters available in LSI circuits using Charged Coupled Devices (CCD). The output of the threshold detector is fed to an array of CCD Matched filters each tuned to a different frequency and dividing the total range of signal frequencies into equal parts. The matched filter array shifting and sampling frequency is controlled by a nonlinear clock which compensates for the variation in label scanning rate. The matched filter outputs are peak detected. The filter with maximum output is identified and the time (relative to the sync pulse at the beginning of the label scan) that the peak pulse occurred is recorded. This information is then fed to the Post Detection Processor.

Each Module Processor channel starts with a signal averager that averages over a time period equal to the time period of a minimum stripe width - 3 μsec. The output of the averager is sampled at a rate of at least 6.66 x 10^5 (= 2 x 1/3 x 10^6) samples per second.

At the end of a scan the Post Detection Processor has the information needed (signal frequency and time location of the label) to assemble the correct number of samples into stripes and modules and finally into a label.

The problems found with this system are:

(a) It requires either a high throughput processor to process the data before the beginning of the next scan, or a great deal of memory.

(b) The signal averaging circuits average only over the minimum possible stripe period so that most of the time they are not matched to the stripe pulse period.

The distinct advantage is that it can operate over a single scan which can be an advantage with fast moving trains where time is available for only one or two scans.

3.4.2.2.4.2 Two-Scan System

The one scan system described above was rejected in favor of a more nearly optimized system such as shown in Figure 16.

From Figures 15 and 16, it can be seen that the major difference in the two systems is that the two-scan system uses the data obtained by the Label Locator on the previous scan to optimize the signal processing and module decoding in the present scan. The inputs to the Post Detection Processor are thus

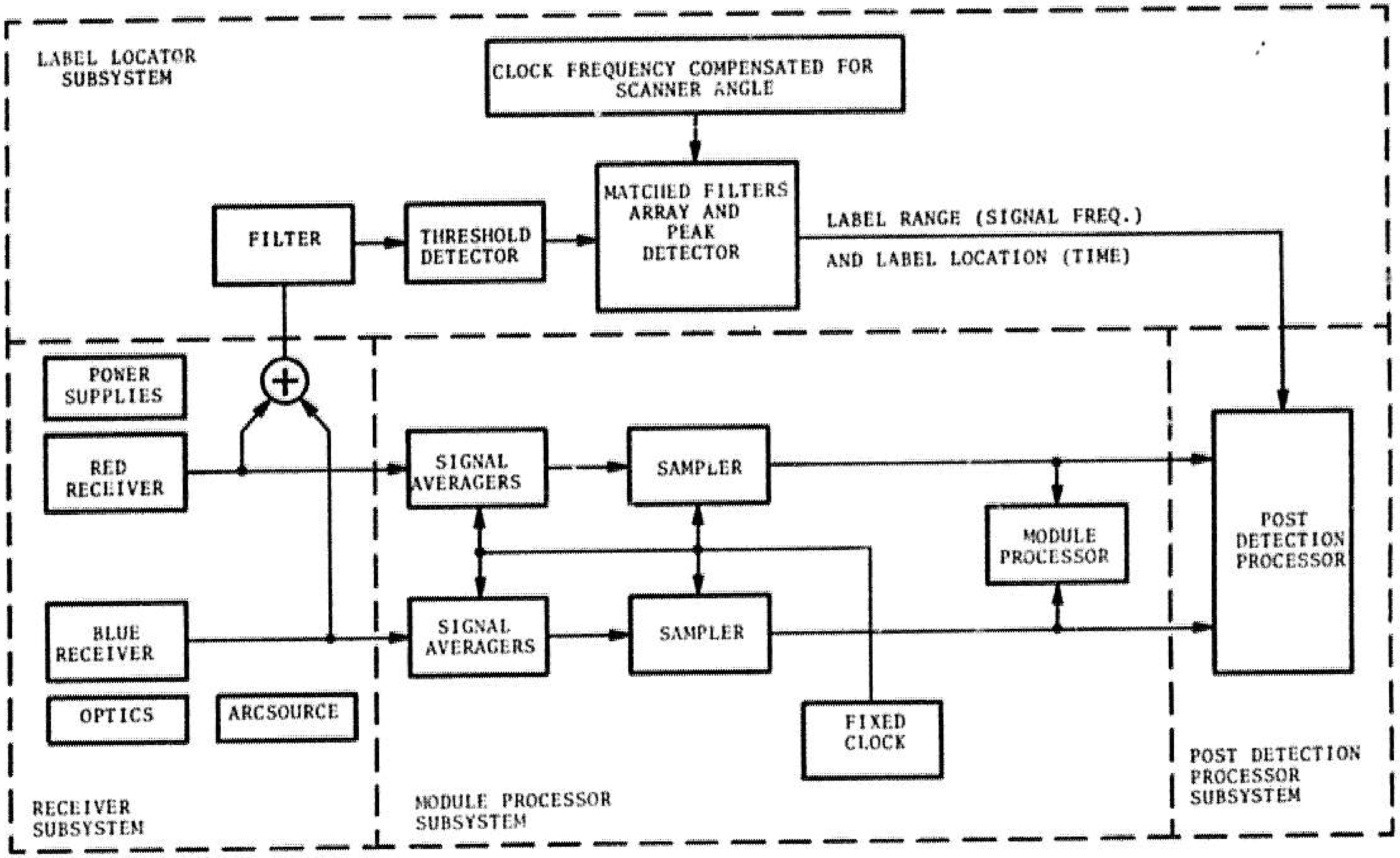

FIGURE 15. SINGLE SCAN SYSTEM BLOCK DIAGRAM

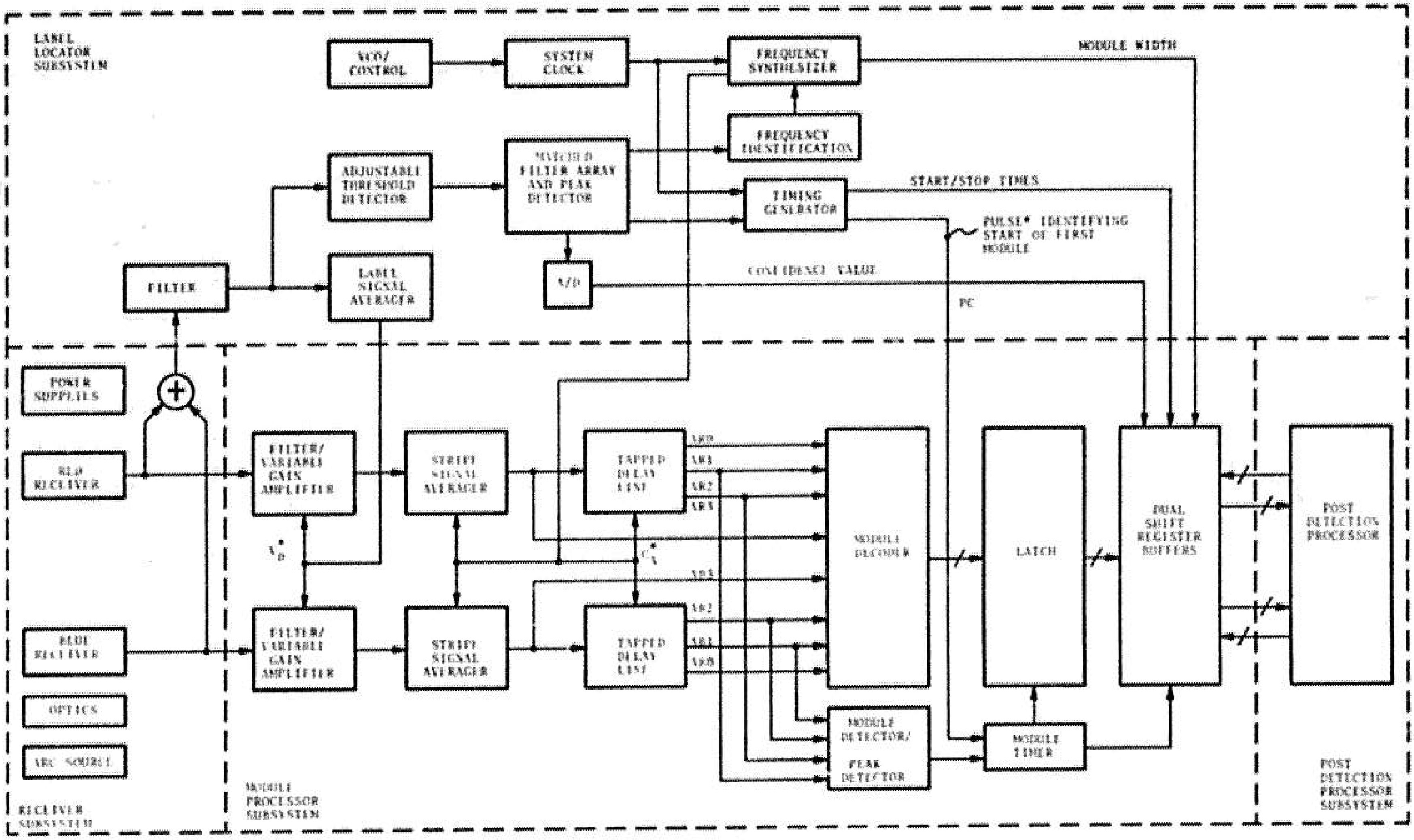

* Parameter adjustment based on previous scan.

FIGURE 16. TWO-SCAN SYSTEM BLOCK DIAGRAM

improved estimates of label module timing and identification in real time.

The Label Locator Subsystem for this system functions similarly to that of the single-scan system. The red and blue filtered photomultiplier output signals are summed and sent through a threshold detector. Then this one-zero quantized signal is applied to an array of matched filters the outputs of which are peak detected. The outputs of the peak detector circuit contain the information needed to obtain the identification in the Frequency Identification block of the particular matched filter which had the highest peak. The time that this maximum occurred (on the previous scan) is computed in the Timing Generator block. The Timing Generator also outputs a pulse P(c) which identifies the start of the first module of the present label.

The System Clock block provides fixed timing to both the Frequency Synthesizer and to the Timing Generator. The Frequency Synthesizer provides the C_3 clock signal (which is a function of the Matched Filter peak filter frequency) to the Signal Stripe Averagers and to the Tapped Delay Lines. C_3 has a constant number of cycles per stripe signal regardless of where the label is with respect to the scanner. Since C_3 drives the signal processing channels, these channels operate as though the signal inputs were of a constant frequency. This attribute allows for an optimized Signal Averager and a Module Timer that can resynchronize itself during each module signal time.

In the Module Processor Subsystem, the gain of both channels is set (by the V_0 signal) to the average level of the complete label on the previous scan. The Signal Stripe Averager is a stripe signal preprocessor that decreases the bandwidth required in the Tapped Delay Lines by effectively allowing them to disregard the black spaces between modules. For each channel, the Module Decoder looks at the following four sets of two analog signal levels supplied by the Tapped Delay Line circuits:

1. Pre-module Black Level (AR0, AB0)
2. First Stripe Color Level (AR1, AB1)
3. Second Stripe Color Level (AR2, AB2)
4. Post-module Black Level (AR3, AB3)

Sixteen functions, F1 through F16, are formed in the Module Decoder as simple arithmetic combinations of the eight signal levels enumerated above. Corresponding to each function, there is a set of four digital signals (R1, B1, R2, B2) indicating a module color combination as shown in Table 2. The module decoder outputs continuously the four bits R1, B1, R2, B2 that correspond to the function having the highest peak value. The function with the highest peak is, of course, changing with time.

The Module Decoder/Peak Detector forms yet another arithmetic combination (equal to $0.8(R1+B1) + R2+B2$) of the stripe signal levels. When this function peaks, the Module Decoder output is latched into the appropriate module storage location (see Table 2) in the Shift Register Buffer that is currently in the write mode. This is done for each of the thirteen label modules. The source of the other data stored in the Shift Register Buffer is indicated in Figure 16.

TABLE 2: CODE TABLE FOR MODULE DECODER OUTPUT

	R_1	B_1	R_2	B_2	Color of Half Stripe 1	Color of Half Stripe 2
F1	0	0	0	0	White	White
F2	0	0	0	1	White	Blue
F3	0	0	1	0	White	Red
F4	0	0	1	1	White	Black
F5	0	1	0	0	Blue	White
F6	0	1	0	1	Blue	Blue
F7	0	1	1	0	Blue	Red
F8	0	1	1	1	Blue	Black
F9	1	0	0	0	Red	White
F10	1	0	0	1	Red	Blue
F11	1	0	1	0	Red	Red
F12	1	0	1	1	Red	Black
F13	1	1	0	0	Error	White
F14	1	1	0	1	Error	Blue
F15	1	1	1	0	Error	Red
F16	1	1	1	1	Error	Black

Upon completion of the label scan, the PDP reads in this data and releases the other buffer for next scan writing. This is done by resetting the Module Timer when PC goes low.

3.5 Experimental System Configuration

The experimental system chosen for this demonstration project uses a two-scan mode to achieve a more nearly optimal label detection capability. Referring to Figure 16, it can be seen that the two-scan system uses the data obtained on the previous scan by the Label Locator to optimize the signal processing and module decoding in the present scan. The major differences between the experimental system and the two-scan system described above is that the Label Locator is implemented using digital logic and timing rather than an array of matched filters and Standardizers replace the Tapped Delay Line circuitry.

The system block diagram is shown in Figure 17 and the timing relationships between the data and control signals are shown in Figure 18. Using these two figures, an outline of the functions of the various system blocks can be given.

It is assumed that the wheel and block signals have been ON and the scanner is up to speed. At some time later, a Sync pulse occurs which initializes the circuits in the Digital Label Locator. After the occurrence of the Sync pulse, the Label Signal components are sensed by the receiver channels. The start of the Label Signal is marked by the occurrence of the start

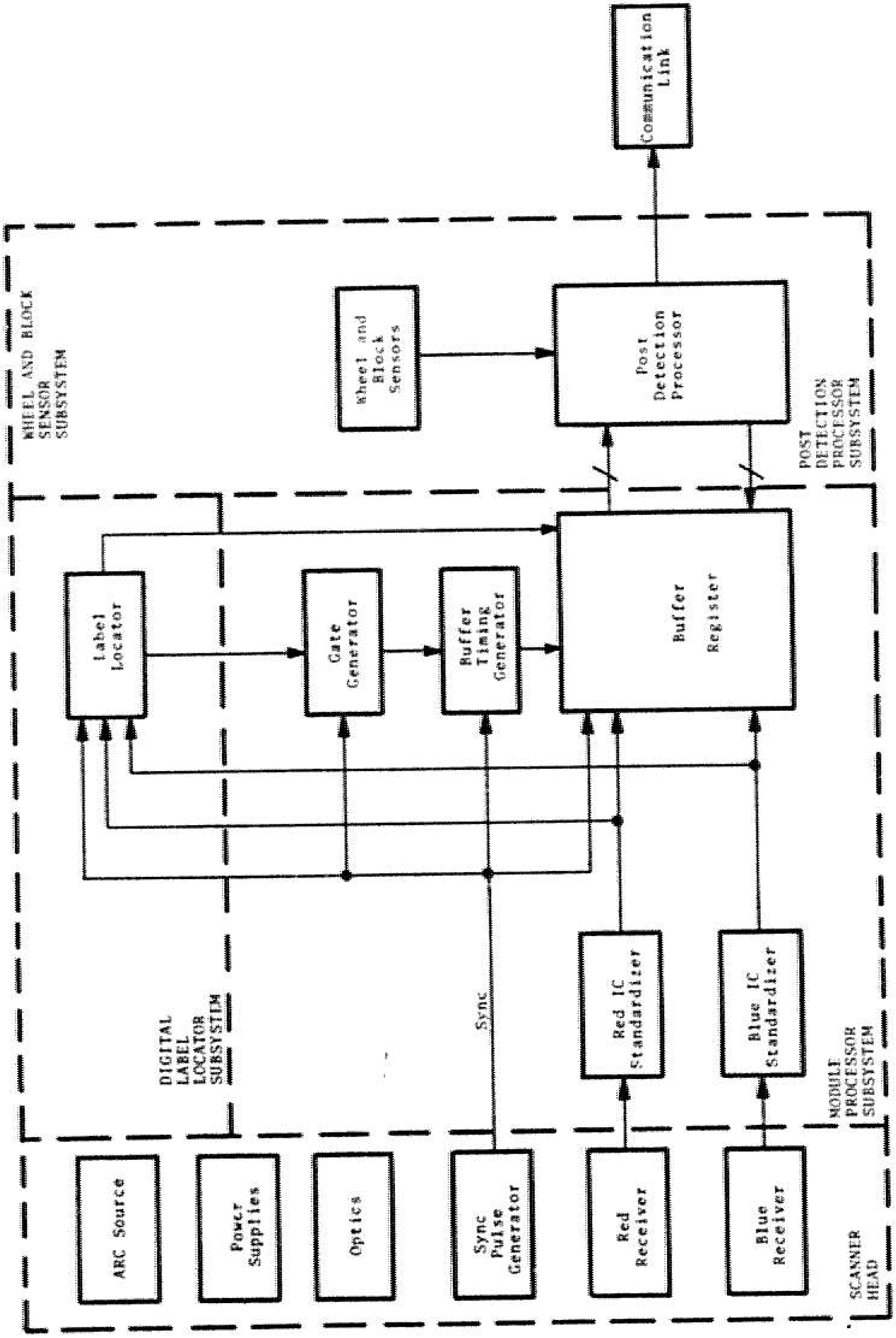

FIGURE 17. EXPERIMENTAL SYSTEM BLOCK DIAGRAM

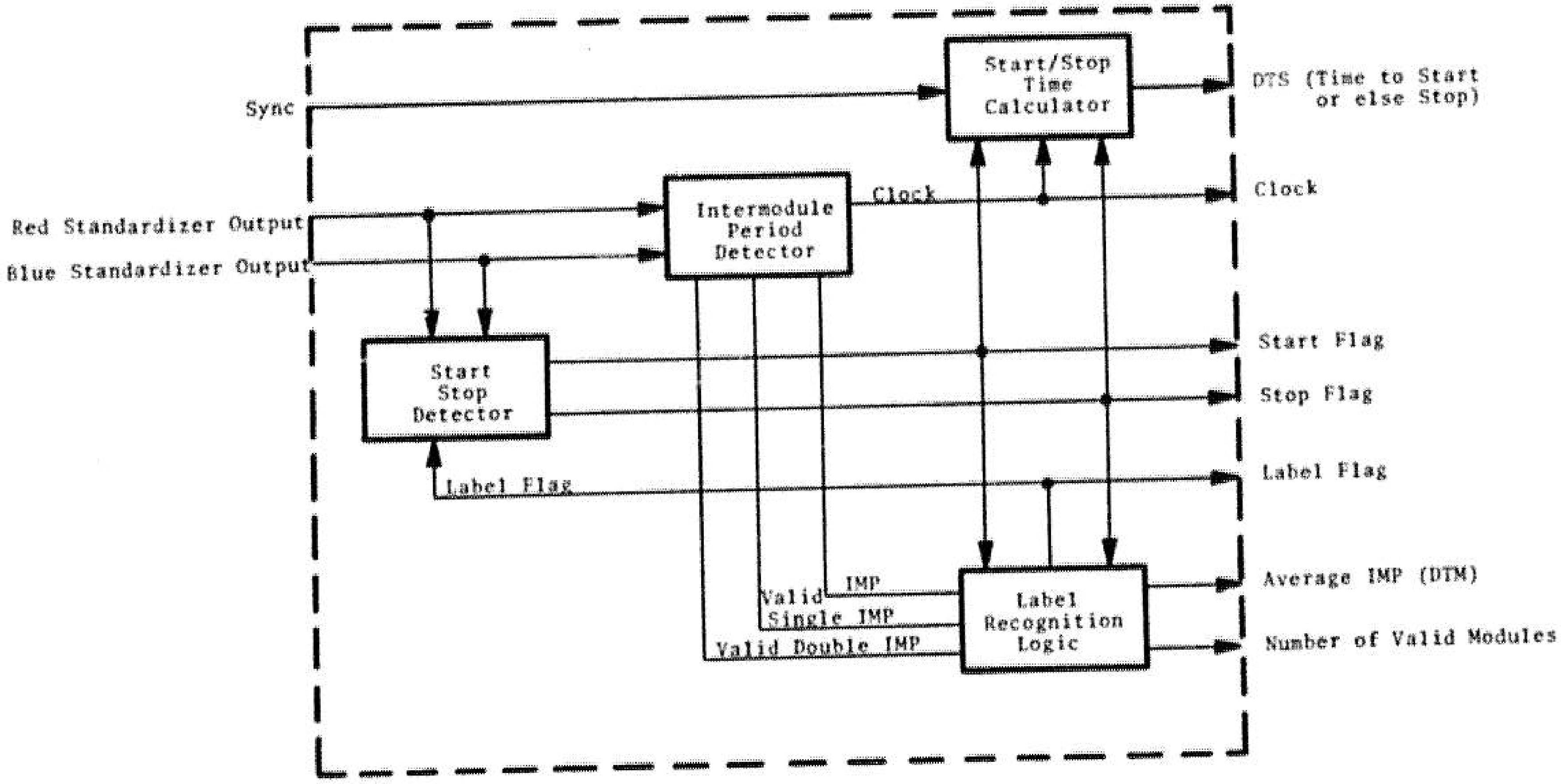

FIGURE 18. DIGITAL LABEL LOCATOR SUBSYSTEM

module signal at time T(st) relative to the Sync pulse. The start module is followed by ten data modules, a stop module and a parity module. The time of the occurrence of the stop module is denoted by T(sp) and the label time length by T(LL). All these time variables, T(st), T(sp), and T(LL), are a function of the geometric relationship between the scanner and the label. As indicated by Figures 17 and 18, the Digital Label Locator operates on the incoming label signals in real time and, at the end of the label signals, stores the important label timing characteristics. These data are then used to generate the timing, gating, and clocking which is used in the successive scan to optimize the signal detection and decoding process in the Module Processor Subsystem.

A <u>microprocessor</u> is used for multi-scan correlation of the large number of label identifications and to derive a confidence indication for each scan. For the train speeds usually encountered in the vicinity of the OACI system (speeds above 40 miles per hour are extremely rare), ten identifications are usually available. The most likely identification and the associated confidence are then stored as the car identification.

3.5.1 Digital Label Locator Subsystem

The function of the Digital Label Locator Subsystem is to generate the timing for the Module Processor Subsystem as discussed in Section 3.5.2 below. There are also the partial label data requirements that label data be accepted if at least seven Data Modules are detected and either the start module or the stop module or both are detected.

3.5.1.1 Digital Label Locator Functional Description

A functional overview of the Label Locator is shown in Figure 18. Figure 19 shows the signal interface between the Digital Label Locator and the Module Processor Subsystem.

The inputs to the Digital Label Locator Subsystem are the Sync pulse from the Scanner Subsystem and the standardized pulses which are tested for the occurrence of start or stop modules by the Start/Stop Module Detector. The standardized pulses are also used to measure the time between modules by the Intermodule Period (IMP) Detector as shown. The outputs of this circuit block are digital words representing the IMP's and pulses indicating valid single and double intermodule times. The IMP Detector also includes the system clock. All these signals are summed and processed in the Label Recognition Logic to obtain the average module spacing.

At this point, referring to Figure 19, a number of needed time measurements can be identified. In addition to the IMP measurements, the time TS is generated in the Label Locator. TS is the time from the occurrence of a sync pulse to the occurrence of a start module if detected, or to the occurrence of a stop module if detected and the Label Flag is set. Other timing is generated in the Module Processor Subsystem as described in the next section.

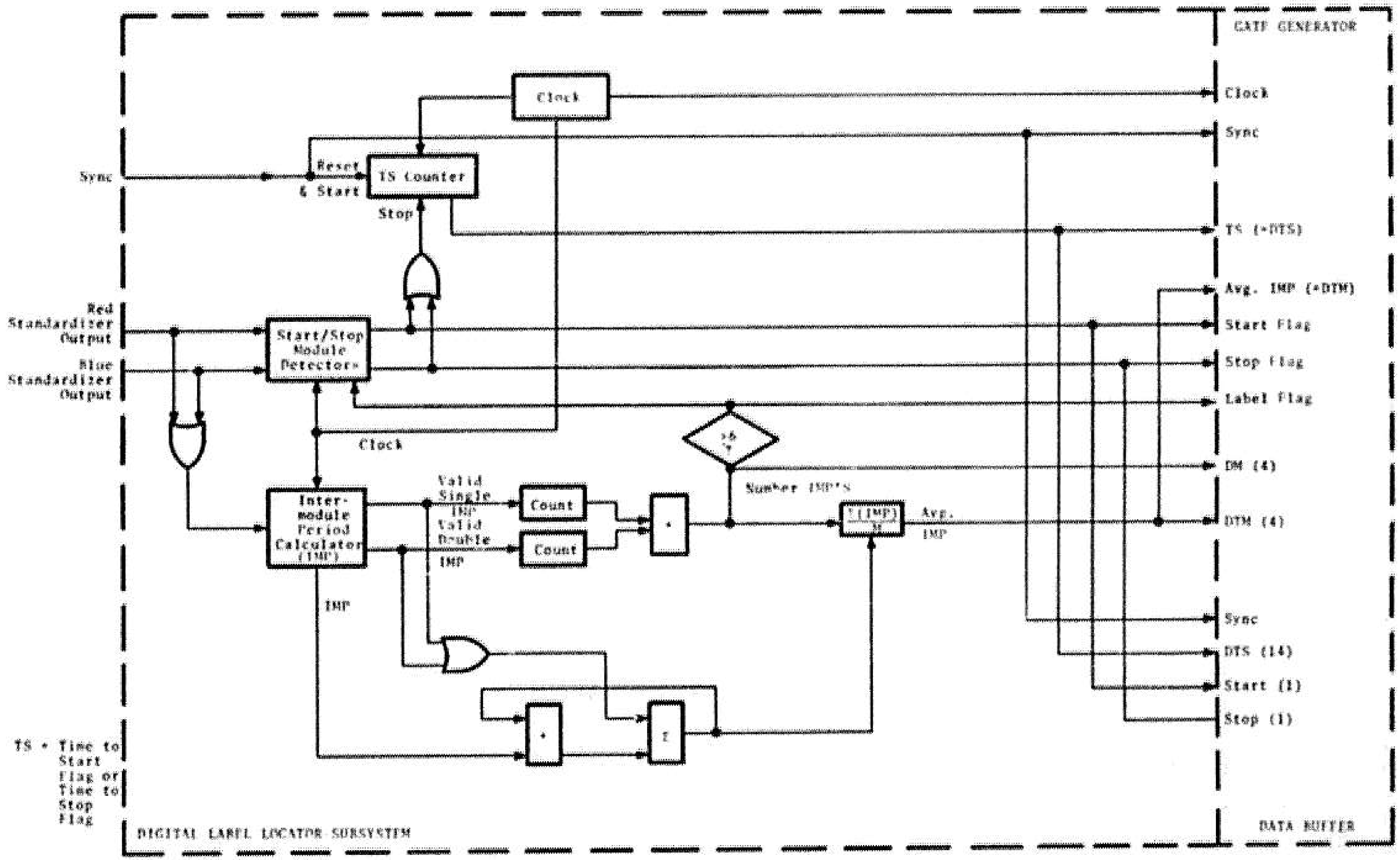

FIGURE 19. DIGITAL LABEL LOCATOR/MODULE PROCESSOR SUBSYSTEMS INTERFACE

The outputs of the Digital Label Locator are (as shown in Figure 19):

1. Clock Signal
2. Sync pulse
3. Start flag
4. Stop flag
5. Label flag
6. Time to start or else stop (TS)
7. Average Intermodule Period (DTM)
8. Number of Valid Modules (DM).

The basic Clock frequency is 10 MHz. The Start Flag is set if the Start/Stop Module Detector senses a start module. The Stop Flag is set if both a stop module is sensed and the Label Flag is set. All flags are reset prior to the next label scan.

3.5.1.2 Start/Stop Detector

The red and blue standardizer outputs are monitored by the Start/Stop Module Detectors. The elapsed time is measured between the leading and trailing edges of the Red and Blue (Blue and Red) video pulses and compared to acceptable limits to determine authentic start (stop) modules. This circuit block outputs a Start Flag (initiated on completion of recognition of a start module) and a Stop Flag (initiated on completion of recognition of a stop module).

3.5.1.3 Intermodule Period Detector

As shown in Figure 20, the Red and Blue standardizer outputs are added together with an OR gate and the resulting video signal is the signal source for determining the Intermodule Period (IMP). The pulse time diagram and the expression for determining IMP is shown in the lower left of Figure 20. The pulse time widths of two successive video pulses are added together and averaged [(TH(N-1)+TH(N))/2]. This result is then added to the time between these [the low time T(L)] to get IMP. If the video pulses remain high or low too long then the counters which are measuring these elapsed times overflow and generate an invalid pulse time. These measurements of IMP are then compared to minimum and maximum acceptable times for both single and double IMP's. The outputs of this circuit block are:

1. Start Flag (initiated on completion of recognition of a start module).
2. Stop Flag (initiated on completion of recognition of a stop module).
3. IMP Digital Word (10 bits).
4. Valid Single IMP (output latch clocked 0.6 μsec after end of combined video pulse).
5. Valid Double IMP (same timing as for valid single IMP).
6. Invalid Pulse (Reset of Valid IMP circuits occurs when detected).

The system Clock is also contained in this circuit block. The basic Clock output is a 10 MHz pulse train.

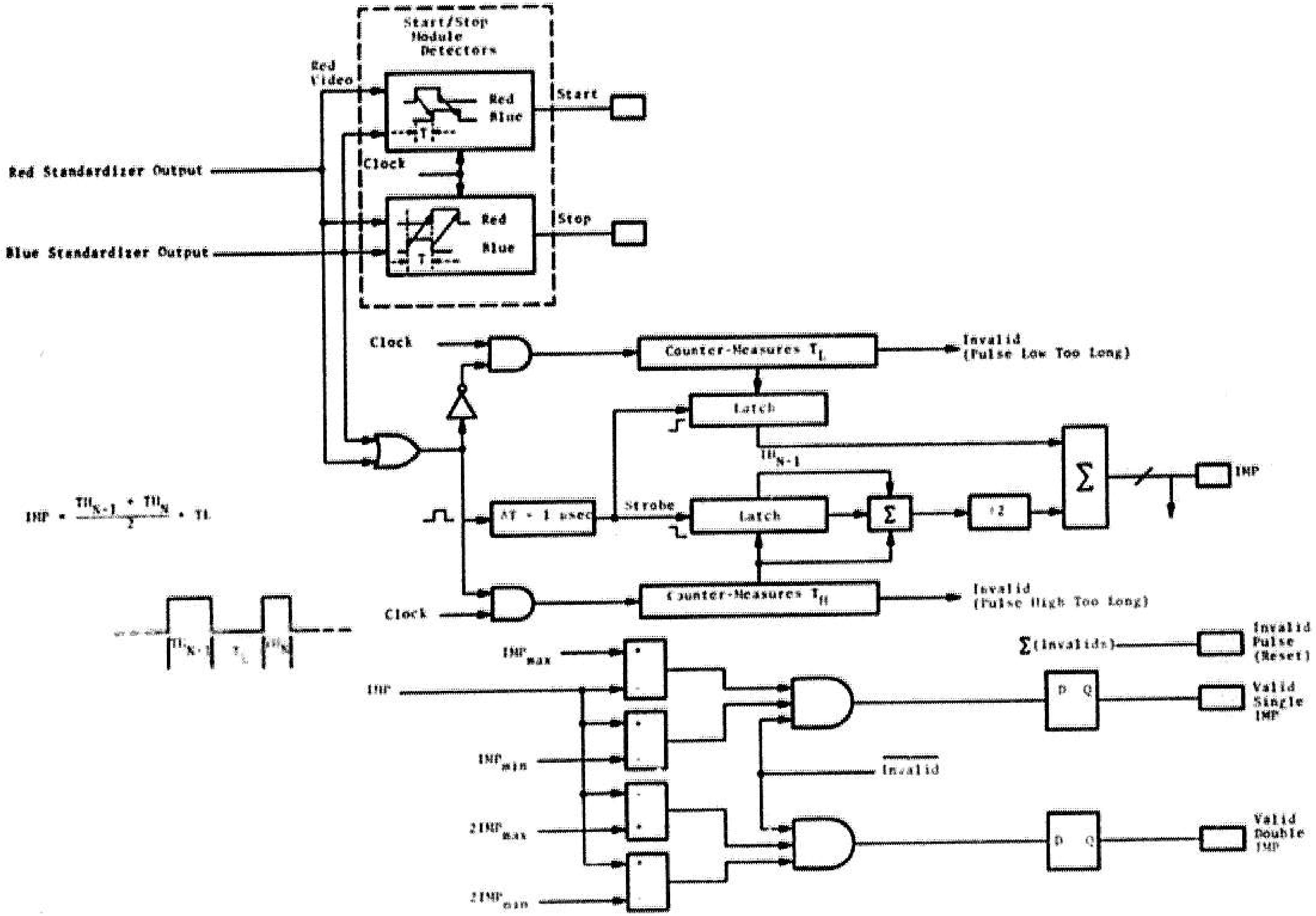

FIGURE 20. START/STOP AND IMP CALCULATIONS

3.5.1.4 Label Recognition Logic

In any one scan the Label Recognition Logic collects the signals needed to determine both the acceptability of a label and information indicating the quality of the label information obtained. If an acceptable label has been recognized, the Label Flag is set. The number of valid modules (DM) is taken as the measure of label information quality.

The functional diagram of the Label Recognition Logic is shown in Figure 21. The valid double (D) and single (C) IMP's are counted and added together obtaining the total number of valid intermodule periods M. A Label Flag is set only if at least a minimum number (7) of IMP's are detected (Min. M) out of which a minimum number must be single IMP's (Min. C). A Start Flag is set by the Start/Stop Detector only if a start pulse occurs before a Label Flag is set and a Stop Flag is set only if a Label Flag has been previously set. The IMP accumulator and counter is cleared each time a start module is detected and inhibited when a stop module is detected and the Label Flag is set.

3.5.1.5 Start/Stop Calculator

The average intermodule period is calculated in this circuit block by summing the individual IMP's, both single and double, and dividing this sum by the total number of modules detected, DM. This calculation is detailed in Figure 19. The output of

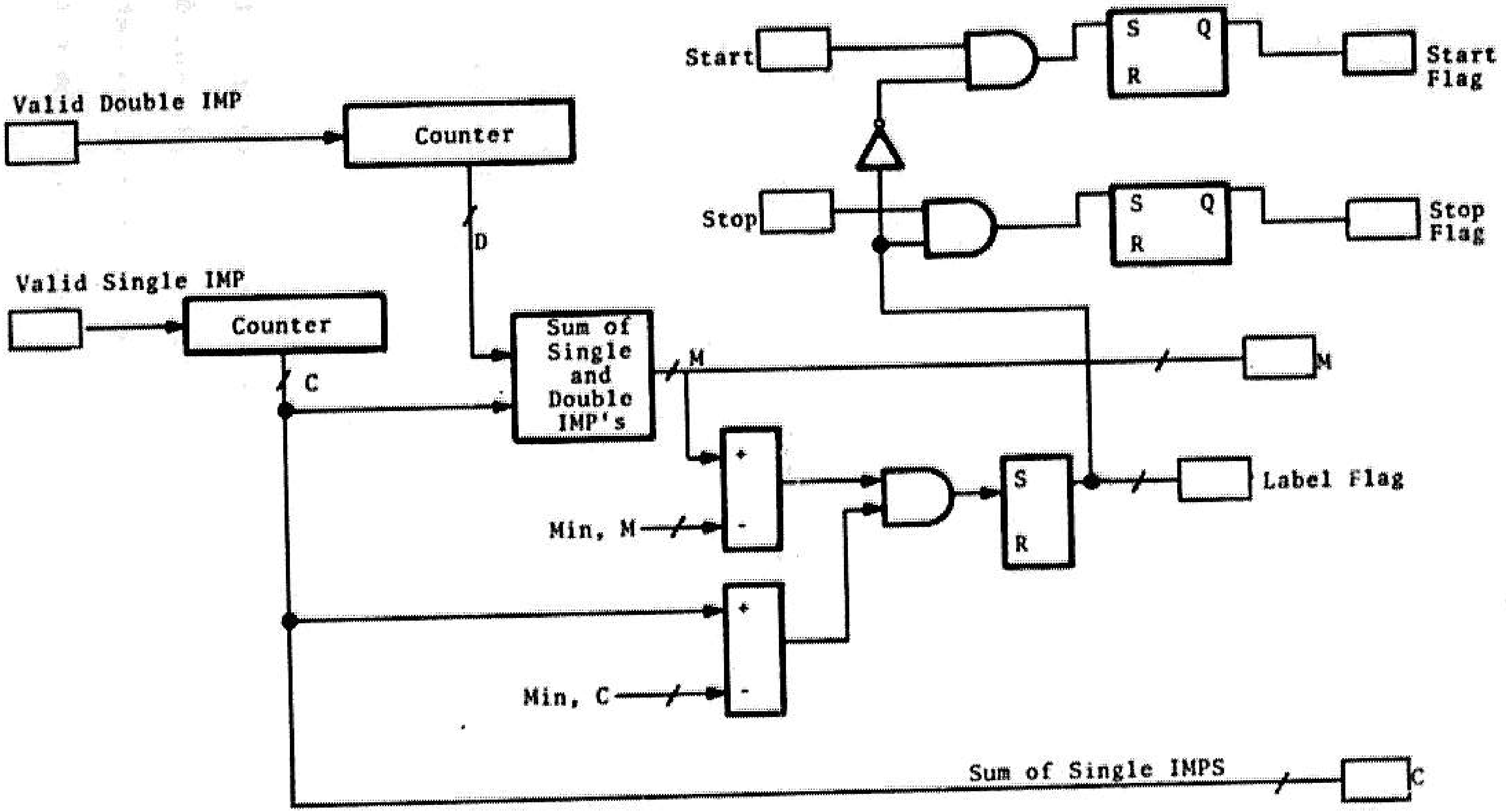

FIGURE 21. LABEL RECOGNITION LOGIC

the IMP circuit is the average intermodule time period and is designated DTM.

The TS counter circuit is shown functionally in Figure 22. This counter is reset and enabled at the occurrence of a sync pulse. This counter counts the 10 MHz clock (0.1 μsec resolution) until the occurrence of a Start Flag. This data is then latched and made available to the display buffer circuits described in Section 3.5.2.2.

If no Start Flag occurs then the TS counter continues to count until the occurrence of a Label Flag. At this event the counter is interrupted from counting for exactly 16 clock cycles of the 10 MHz clock. This is ample time for counter carry propogation to occur and the time needed to latch the contents of the counter. The counter and latch controller then inserts a carry at the input to the 5th stage of the counter (adds a count of 16) and then enables the counter to continue. If a Stop Flag occurs, the counter is again stopped and its contents loaded into the latch.

3.5.1.6 Display Buffer

The Display Buffer (see Figure 23) buffers the output data from the Digital Label Locator Subsystem to the Buffer Memory. In addition to this simple function, it also grades the data received during a particular scan and, in real time, latches the data having the highest "quality factor" into the output latches. This function serves to filter out much of the false label-like

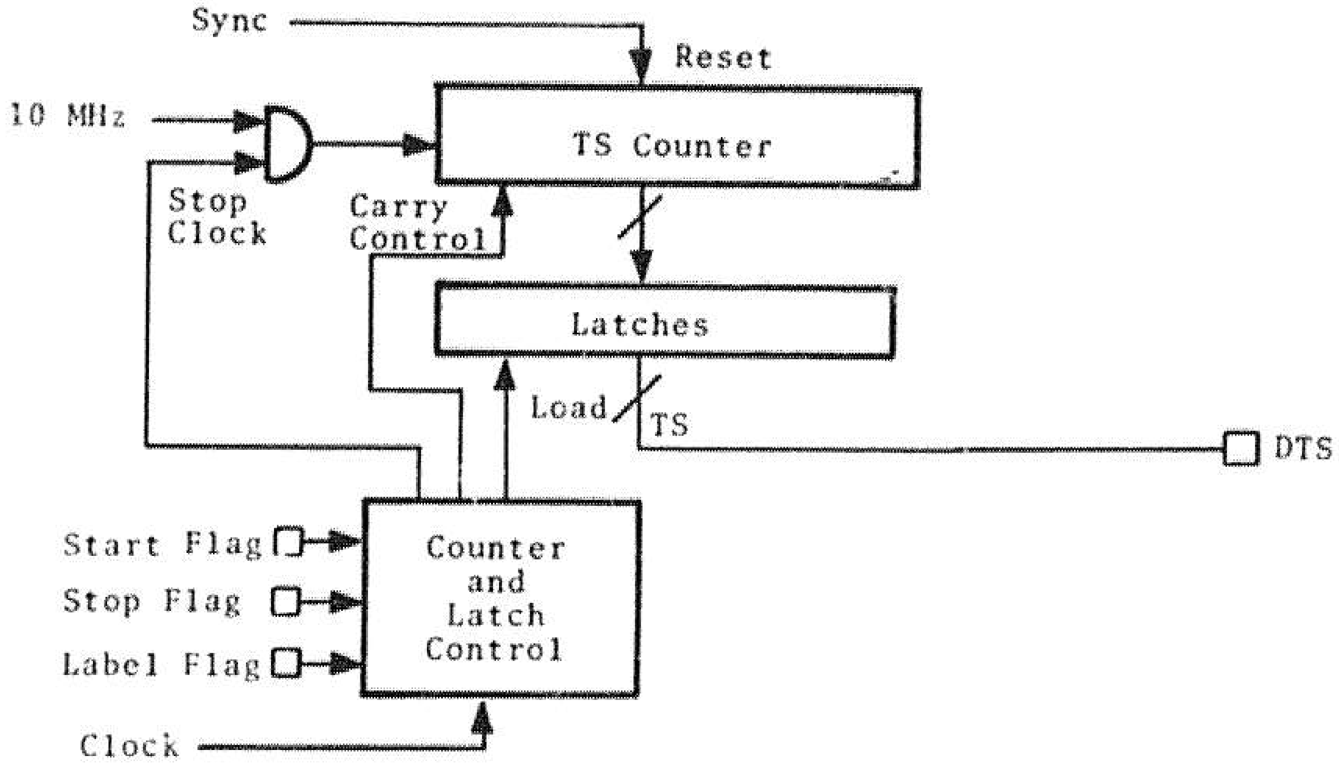

FIGURE 22. TS COUNTER

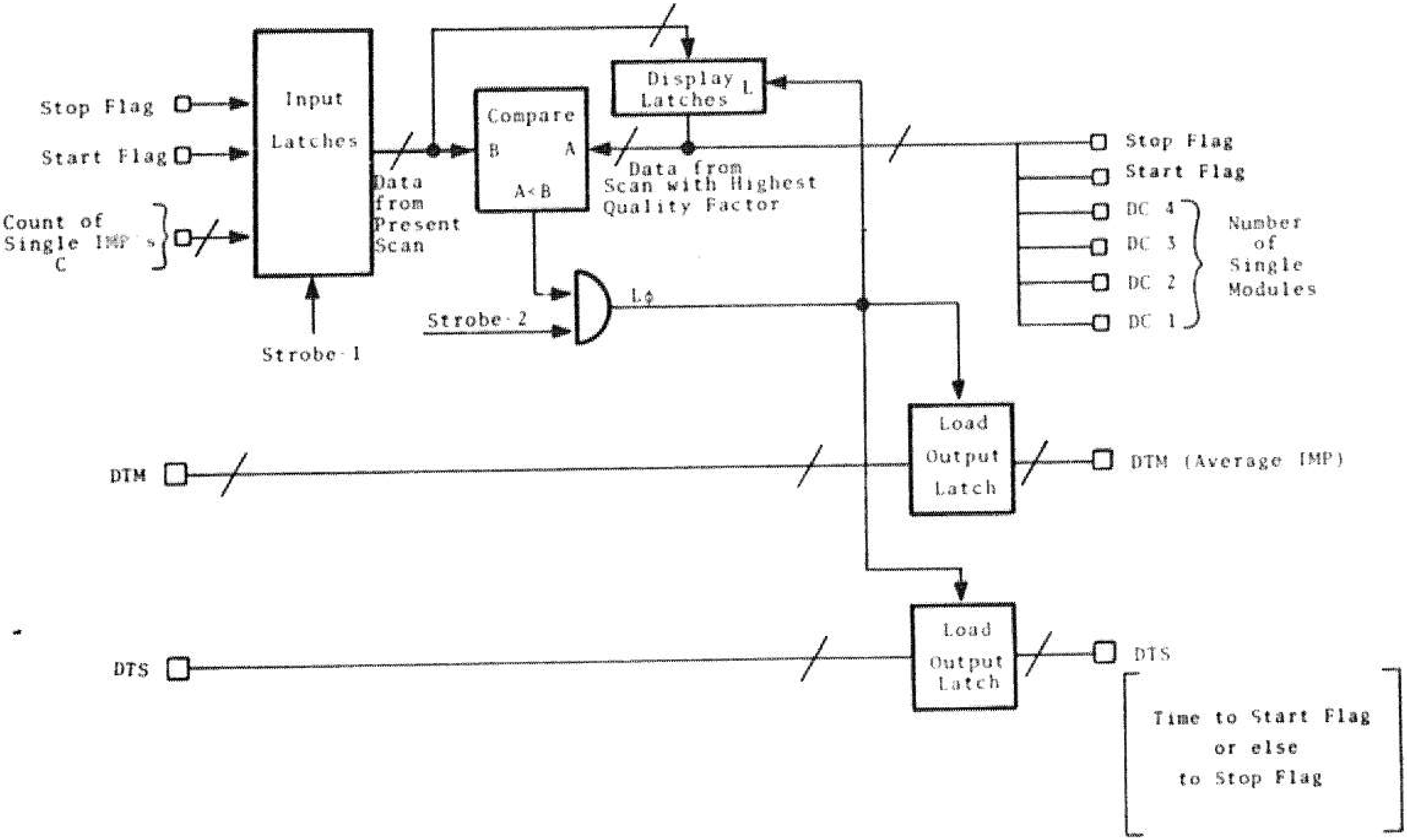

FIGURE 23. DISPLAY BUFFER

signals. The "quality factor" is simply a digital word whose first and second bits, respectively, are the Start and Stop Flags whose next four bits are the four-bit word (DM) representing the number of valid modules detected during the current scan.

The current quality factor is loaded into the Input Latches by Strobe 1 which is a pulse delayed from the occurrence of a Label Flag. This current quality factor is then compared with the previously highest quality factor residing in the Display Latch. If the present quality factor is higher - i.e., if B>A - then the output (A<B) of the compare circuit goes high and, on the occurrence of the Strobe 2 pulse, the current quality factor is strobed into the Display Latches. Simultaneously, the currently generated DM and DTS data, associated with this new highest quality factor, is strobed into the Output latches.

The output from the Digital Label Locator Subsystem consists of:

1. 2 bit STATUS where
   00 = No Start or Stop Flag
   01 = Start, no Stop Flag
   10 = Stop, no Start Flag
   11 = Start and Stop Flags
2. 4 bits - number of IMP's
3. 4 bits - average IMP
4. 14 bits - time from sync to flag as specified below:

STATUS	TIME TO
00	Label Flag
01	Start Flag
10	Stop Flag
11	Start Flag

(Last Significant Bit = 0.2 μsec)

3.5.2 Module Processor Subsystem

The two major blocks of the Module Processor Subsystem are the Gate Generator and the Buffer Register. These blocks are described below in the next two sections. Figure 24 shows an overview of the Module Processor Subsystem and its relationship to the other subsystems.

3.5.2.1 Gate Generator

A block diagram of the Gate Generator is shown in Figure 25. The sole function of this circuit block is to generate two label signal timing pulse streams, G1 and G2, as shown in Figure 26. These pulse streams are used on the next scan to time the sampling of the red and blue standardizer outputs in the first half module (G1) and in the second half module (G2) for each of the thirteen Label modules.

One principal computation performed by the Gate Generator is that required to obtain the Start-of-Label time [T(SL)]. This requires the computation of the average module width, MW, and Label Length, LL. MW is obtained by taking six-elevenths (35/64

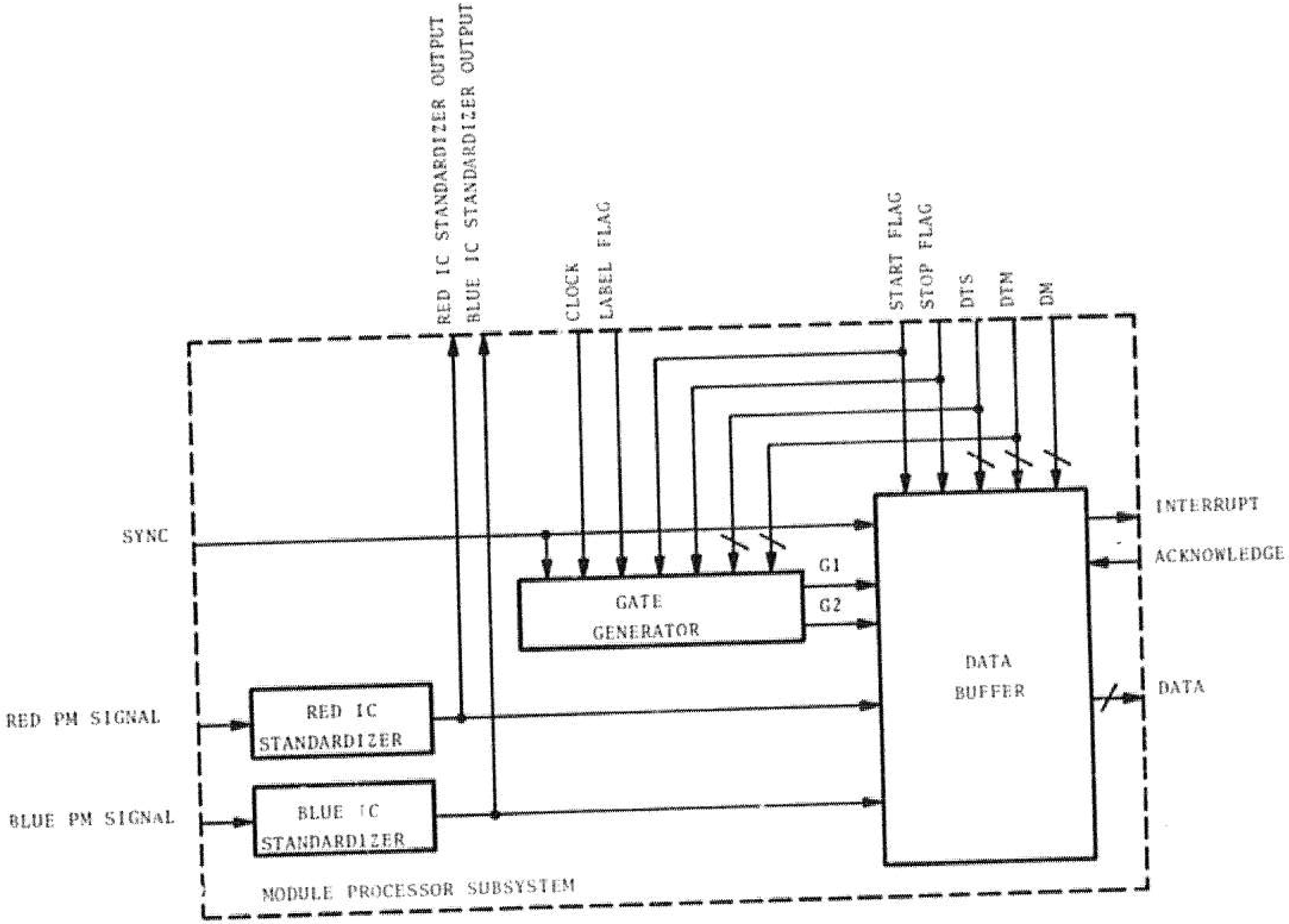

FIGURE 24. BLOCK DIAGRAM OF MODULE PROCESSOR SUBSYSTEM

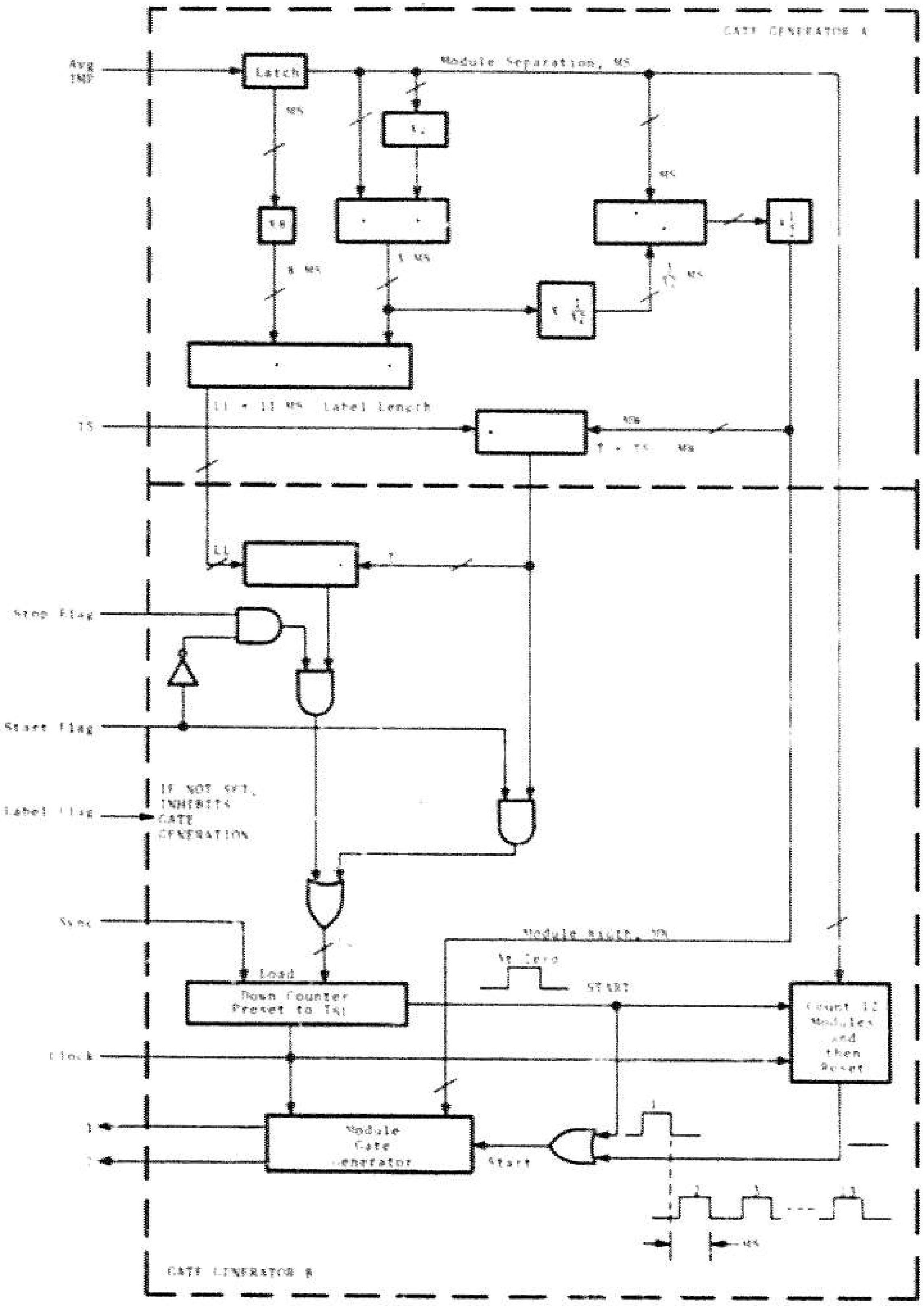

FIGURE 25. GATE GENERATOR

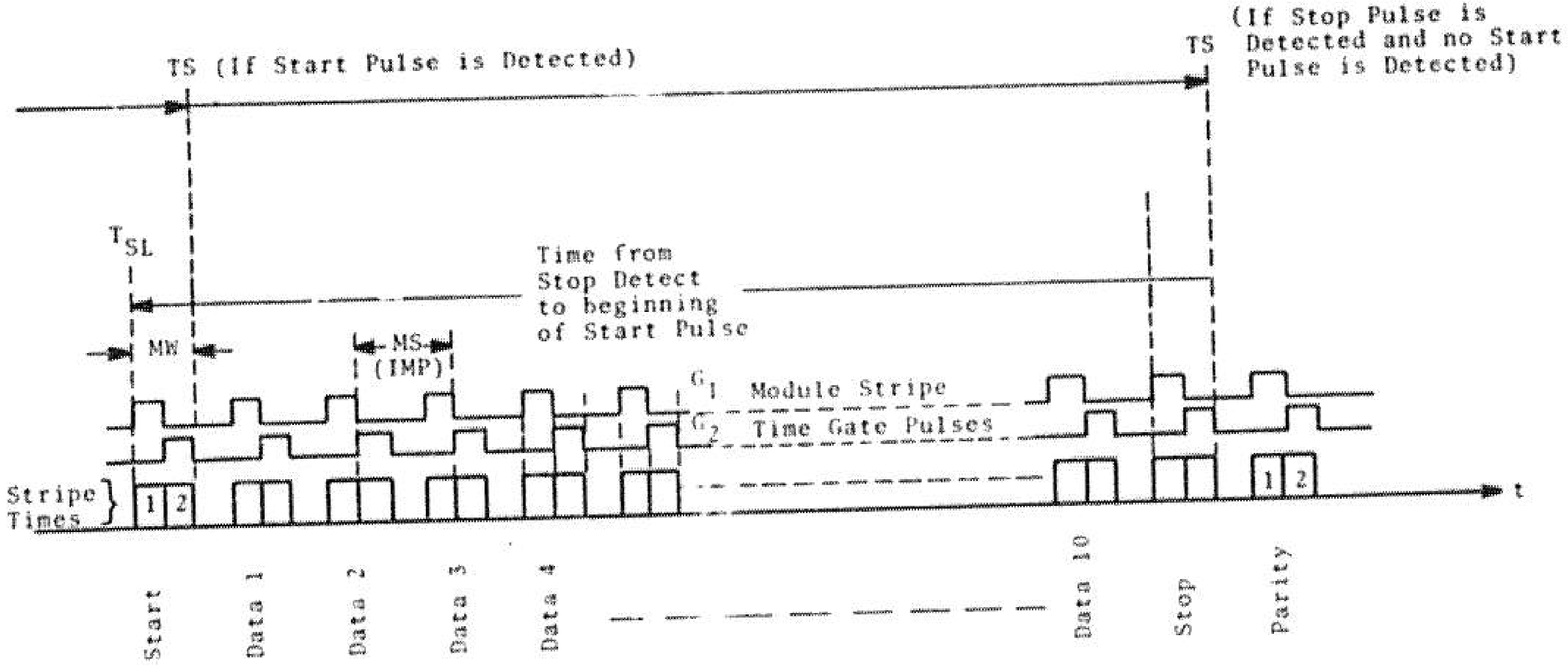

MW = Module Width
MS = Module Spacing
T_{SL} = Start Label Time
G_1 = Gate pul:e aligned with Stripe 1 Time
G_2 = " " " " " 2 "

FIGURE 26. LABEL SIGNAL TIMING

is actually used to approximate 6/11) of the average Module Spacing, MS, since this ratio is a constant. (MS is just the Average Intermodule Period, ĀTM.) If a start module is detected, T(SL)=TS-MW. If a start module is not detected but a stop module is, then to obtain the Label Start Time, T(SL), the Label Length, LL, and one module Width, MW, must both be subtracted from TS, T(SL)=TS-MW-LL. The Label Length is obtained by multiplying MS by eleven which is the number of modules from the end of the start module to the end of the stop module.

3.5.2.2 Data Buffer

The Data Buffer circuit block buffers the data generated by the Label Locator and latches the red and blue standardizer outputs into the buffer at times indicated by the G1 and G2 pulse trains. This double buffer register is shown functionally in Figure 27. This diagram shows how the standardizer outputs and the Digital Label Locator Subsystem are connected to the Post Detection Processor through the Data Buffer interface. As shown, the Data Buffer Register consists of two 16-word by 8-bit shift registers along with the data latch/formatter, one multiplexer and the buffer select control. Also shown for completeness is the interface between the PDP and the 4-bit control register which contains the wheel and block detection and motion direction information.

The PDP receives the data on an interrupt basis via two interrupt channels. The first, Interrupt 1, is generated when

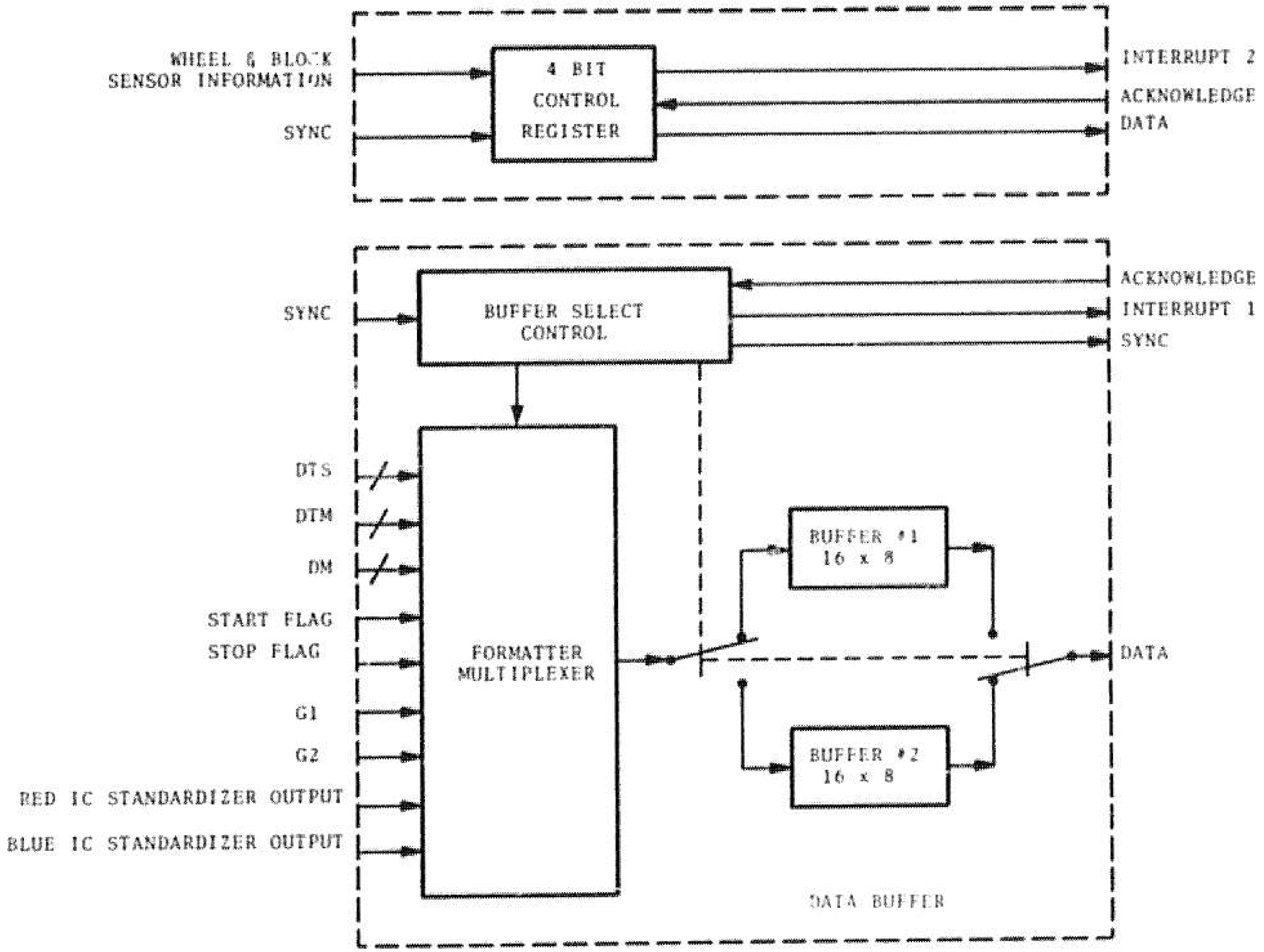

FIGURE 27. BLOCK DIAGRAM OF THE DATA BUFFER

one of the buffers has been loaded and is ready to be processed; the second, Interrupt 2, is generated by the control register whenever its status changes.

The interaction of the Data Buffer and PDP is now described. When the Digital Label Locator finds valid label data, it loads the first 3 data words into the buffer register selected for loading. Table 3 shows the data structure. If there are no data, these words are all zeros since the register previously read by the PDP is filled with zeros at this point. If there are valid data, a latch is set for the Module Decoder which loads the 13 words of module information into the buffer. When the buffer has been loaded, the INT line of the PDP is latched true (low = true) and the two flip-flop switches are activated so that the buffer that was just loaded becomes available for reading, and the buffer which was read by the PDP becomes the one available for loading.

On interrupt, the PDP returns an interrupt acknowledge (READY) and the hardware sets the INT line to false. The PDP then disables its interrupts internally and loads the buffer which is full of data into memory for processing. Interrupts are re-enabled as soon as the transfer is complete.

The four-bit control register generates an Interrupt 2 whenever its state changes, which is latched true on the PDP INT line. The PDP acknowledges, causing the latch to be reset, disables interrupts internally, reads the register, and re-enables interrupts.

TABLE 3. SHIFT REGISTER CONTENTS

<table>
<tr><td>REGISTER WORD: 1</td><td>START FLAG</td><td>STOP FLAG</td><td colspan="5">DTS (6 MSB)</td><td>MODULE</td></tr>
<tr><td>2</td><td colspan="7">DTS (8 LSB)</td><td></td></tr>
<tr><td>3</td><td colspan="3">CONFIDENCE (DM)</td><td colspan="4">MODULE WIDTH (DTM)</td><td></td></tr>
<tr><td>4</td><td colspan="3" rowspan="13">DON'T CARE</td><td>R1</td><td>B1</td><td>R2</td><td>B2</td><td>1</td></tr>
<tr><td>5</td><td>R1</td><td>B1</td><td>R2</td><td>B2</td><td>2</td></tr>
<tr><td>6</td><td>R1</td><td>B1</td><td>R2</td><td>B2</td><td>3</td></tr>
<tr><td>7</td><td>R1</td><td>B1</td><td>R2</td><td>B2</td><td>4</td></tr>
<tr><td>8</td><td>R1</td><td>B1</td><td>R2</td><td>B2</td><td>5</td></tr>
<tr><td>9</td><td>R1</td><td>B1</td><td>R2</td><td>B2</td><td>6</td></tr>
<tr><td>10</td><td>R1</td><td>B1</td><td>R2</td><td>B2</td><td>7</td></tr>
<tr><td>11</td><td>R1</td><td>B1</td><td>R2</td><td>B2</td><td>8</td></tr>
<tr><td>12</td><td>R1</td><td>B1</td><td>R2</td><td>B2</td><td>9</td></tr>
<tr><td>13</td><td>R1</td><td>B1</td><td>R2</td><td>B2</td><td>10</td></tr>
<tr><td>14</td><td>R1</td><td>B1</td><td>R2</td><td>B2</td><td>11</td></tr>
<tr><td>15</td><td>R1</td><td>B1</td><td>R2</td><td>B2</td><td>12</td></tr>
<tr><td>16</td><td>R1</td><td>B1</td><td>R2</td><td>B2</td><td>13</td></tr>
</table>

Table 3 shows the contents of the shift register that is loaded and ready for output. The first word loaded, which is also the first word read by the PDP, is at the top (first in, first out processing).

The word structure is as follows:

Word 1: Start bit, stop bit, and the high order 6 bits of the time interval, DTS.

Word 2: The low order 8 bits of the time interval, DTS.

Word 3: 4 bits of confidence, DM, and 4 bits of module width, DTM.

Word 4:
through
Word 16: 4 bits of module detect data for each of the 13 label modules; R1, B1, R2, B2, where:

R1 = red detect true for the first stripe
B1 = blue detect true for the first stripe
R2 = red detect true for the second stripe
B2 = blue detect true for the second stripe.

3.5.2.3 Detailed Circuit Diagrams

Detailed circuit diagrams for all the circuit functions described in Section 3 are included in the form of engineering sketches in Appendix IA of this report.

Referring to the System Block Diagram of Figure 18, the circuit diagram drawing numbers are listed below for the various system functions. Each drawing has a G&S Systems, Inc., drawing number as indicated below:

A. Digital Label Locator Subsystem

300255	IMP Detector and Clock
300256	Start/Stop Detector
300257	Label Recognition Logic
300258	Label Location Calculator
300259	Label Locator Display (used only for test)
300262	Display Buffer
300275	Timing Generator

B. Module Processor Subsystem

300266	Gate Generator-A
300268	Gate Generator-B
300281	Buffer

C. Other

300284	Power Distribution, Grounding, and later connect

3.6 Post Detection Processor Software

The function of the PDP is to collect the label data from up to 64 scans of a given label and to process this data to obtain a best estimate of the contents of the label. To accomplish this, the PDP must have the necessary hardware - Read Only Program Memory, Random Access Memory, Input/Output, etc. - and software.

3.6.1 Microprocessor Hardware Overview

The microcomputer board chosen for the test system is the Zilog Z80-MCB. This is a commercially available microcomputer based on the Z80-CPU microprocessor and its family of support circuits.

The product specification for this microcomputer board and for the microprocessor that is used on this board can be seen in Appendix I.D.2. A block diagram of the Z80-MCB board is shown in Figure 28. The board contains 4K bytes of PROM/ROM/EROM, 4K bytes of dynamic RAM, the Z80-CPU, a serial I/O, a parallel I/O, and a counter/timer circuit. It also contains an on-board 19 MHz clock and buffers for the data, address, and control buses.

3.6.2 Software Description

After analysis and testing on the label location and reading hardware using SOACIS and associated test bed, a label reading software algorithm was developed. The best performance was found using a multistage process to read the labels. The basic philosophy was one of "best guess" at each stage, the later ones being required as a "tie break" when several scans gave equally good best guesses at earlier stages.

The first stage takes the input data for one scan and reformats it. Using a table driven modulo arithmetic, the parity for the digits is calculated. If the calculated parity checks with that read in the confidence of the scan, the label confidence is increased accordingly.

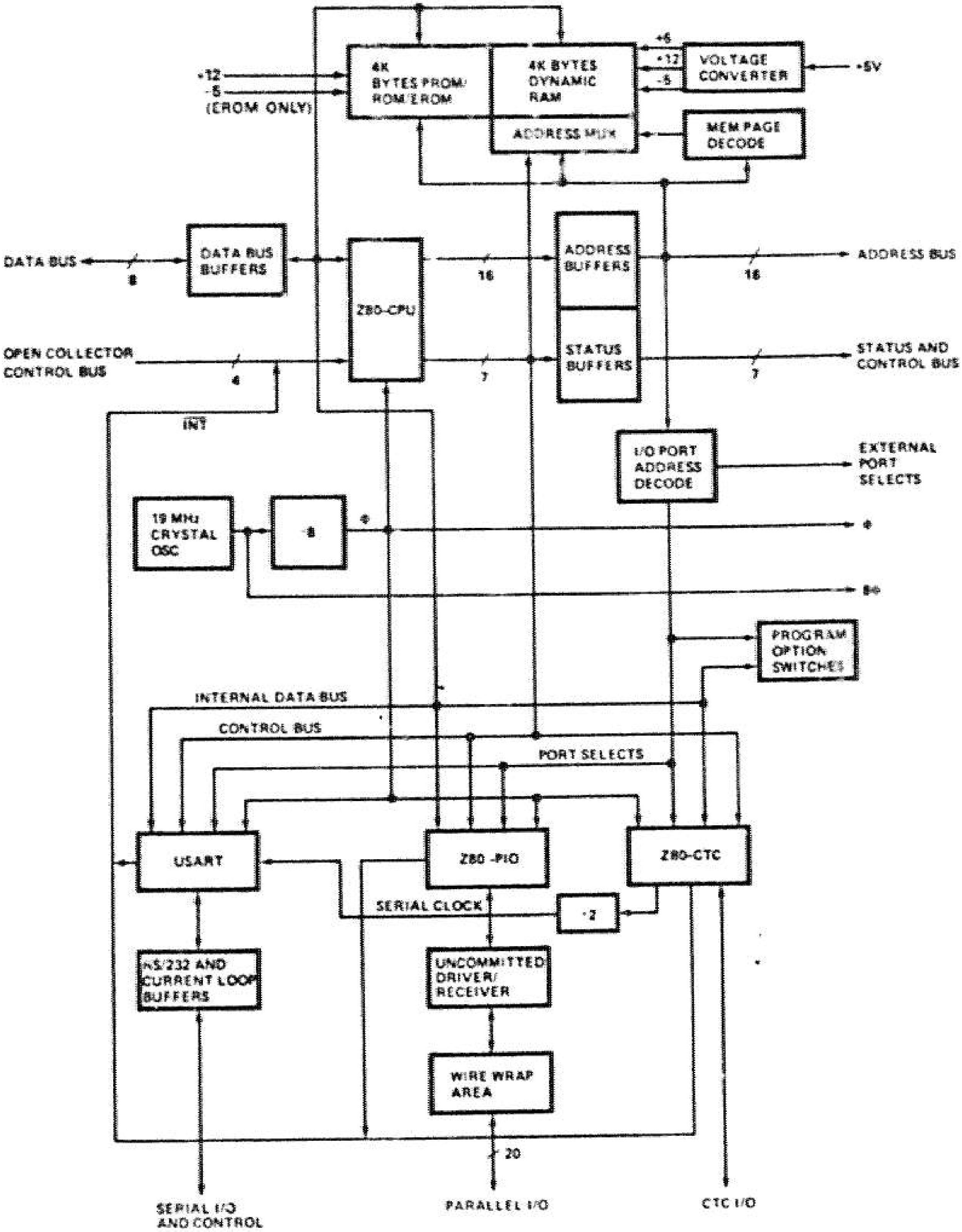

FIGURE 28. Z80-MCB BLOCK DIAGRAM

The parity calculation is done with simple shift and adds with modulo 11 tests. However, as more varied parity calculations are needed a table driver function is used. This function takes the stripe number and digit value as input and returns the change (modulo 11) in the parity value. This is similar to the nomograph used in the field.

The second stage eliminates those scans below a minimum confidence. The level chosen was determined from the background noise level and is used to eliminate processing on obvious garbage.

This is a simple thresholding. This stage and the previous one are combined into a single interrupt driven procedure. The output (if any) is a call to the procedure for the third stage.

The third stage compares successive scans with stored scans and chooses the ones with the higher confidence. In the case of equal confidence levels, all scans are saved for the next stage.

This procedure maintains a list of scans (zero or more) with the same confidence. When called with a scan, a comparison is made with the list confidence; if the list is higher, the scan is ignored, if the scan is higher, the list is thrown away and the scan is kept as the new list. If the confidences are the same, the scan is added to the list.

The fourth stage compares the time of arrival (location) and pulse spacing (distance). If these differ significantly, the readings reflect different objects and are processed separately. If the values are approximately the same then the data are to be regarded as scans of the same label and will be processed together. The output from this stage are sets of related scans giving stripe color, confidence, and location.

This procedure takes away the list (possibly empty) and sorts the scans into <u>disjoint sets</u>. It then calls the procedure for the fifth stage for each set.

The fifth stage counts the number of scans and calculates the per-stripe deviation. The individual stripe readings are compared across the scans. If all are the same color, the stripe is read; if several colors are present, a majority vote is taken. Adjustment is made for the leading start and trailing stop stripes. The resulting reading reduces the object scan data set to a single stripe digit reading and a second most likely digit (if any), for each stripe, a count of the number of scans, a per-stripe deviation, and a total average deviation for the presumed label.

This procedure processes and condenses the scan set into a proto-label and invokes the procedure for the sixth stage. The sixth stage checks the parity on the output of the fifth stage. If the parity checks, then the primary reading is taken for each stripe. If the parity does not check, then one or more stripes are in error. An attempt is made to "correct" the misreading. The stripe with the greatest deviation is the "most likely" candidate. The alternate digit for that stripe is tried. If the parity now checks, that is the correct reading. If not, then the alternate digit for the stripe with the second greatest deviation is tried. Attempts may be tried for all one-stripe digit changes. If none work, then two-stripe digit changes could be tried. This continues until parity checks or the maximum number of shifts is reached. In the latter case, the primary reading is taken. The final output of this stage is a set of stripe readings, a scan count, a parity check flag, and a label confidence. The label confidence is adjusted from the average stripe deviation, the number of scans, the parity check, and the number of digit shifts required. This procedure does the color correction and data judging. Possibly several tries on the parity check will be necessary. Using the table driver function, the parity check may be done by subtracting the function value for the current stripe number and digit then adding the value for the new digit (all modulo 11, of course). After making the correction, if any, the procedure is called for the seventh stage.

The seventh stage collects the "label" readings and correlates them with the track sensor data. For these test purposes, the best label reading for each "car" is chosen (subject to a minimum threshold). In the field case, this stage would take care of multi-label cars. This maintains a best reading. When called with a reading, a comparison is made and the best kept. In field work there might have to be a list of readings to take care of multi-label cars. By an apt choice of data formats, use of index pointers, and pure code, this procedure could be the same procedure used in stage three. There is a threshold below which the reading is kept. The eighth stage is the Hy-format and buffering. This procedure is activated by the track sensor and takes the list (zero or one element length) from the seventh stage and does the formatting and buffering for TTY output. Given that eventually all this software is in ROM, the code is written as pure code and suitable use of procedure control blocks will allow re-entrancy. This is desirable from the point of view of ease of coordination of asynchronous interrupts and software robustness. Semaphore locks are used to control the flow to the various stages. A simple monitor is used to select the various procedures with interrupts activating the 1st, 4th, and 8th. The interrupts do the minimum processing needed, the rest of the flow being done by the monitor and semiplores. A judicious choice of data formats allow "plug-in" removal of stages 4 through 7. A simple fixed block size linked list arrangement is used as a dynamic memory allocation process.

The results of this entire process are to take the best data, partition it into sets that pertain to specific objects (proto-label), make the best guess as to the value of objects as labels, and read them. Then select the reading, with corrections, with greatest consistency as a label. This yields a label reading that uses all available data with higher levels of sophistication being applied if sufficient "noisy" data is input. At each stage the most likely grouping and processing is used. This will yield meaningful results down to the system noise level. The multi-stage approach gives a maximum improvement in signal to noise.

The absolute threshold levels at the various stages allows the cutoff point to be set an an acceptable false alarm rate. The system will read the maximum number of labels for that threshold level; the choice of thresholding at the various stages allows the "fine tuning" of the system in the sense of rejecting special cases caused by particular situational problems (such as sun reflecting off a corregated building or morning glare through slatted stock cars). The successive improvement, using additional data and features of the data, allows the system to achieve maximum performance in the presence of hardware failure which increases noise and lowers sensitivity. The multi-staging allows maximum flexibility in canned software. It also allows for a significant increase in system software throughput (as would be required for multi-label car processing) by a simple use of multiple processors in a pipeline arrangement. Analysis of test runs on this approach indicate that a field improvement of 1.5 to 1.79 can be expected under normal conditions. Greater yields would be possible in special adverse circumstances.

3.7 Improved Optics

3.7.1 Background

Early in the project a study of the OACI optics system was initiated. The objectives of this study were to:

1. Determine areas and magnitude of potential improvements
2. Reduce the more promising improvements to hardware

3. Evaluate the improvements in terms of performance under controlled operating conditions.

3.7.2 Analytical Studies

In support of the optics system studies, an analytic study was conducted.* Calculations of the individual and combined transmittance of elements in the transmission and reception paths were made. Estimates were made of the potential for improvements of the total optical transmittance. Estimates of the output power expected from the detector from internal and external scattering were made. It was found that the level of internal scatter was significantly larger than would be expected from the optical surfaces alone.

3.7.3 Design Improvements

From the results of the analytic studies and from a review of available state-of-the-art optical components, a number of improvements were implemented. Some of these first stage improvements were implemented and have been discussed previously in Section 3.4.1.1. These improvements are:

1. A new arc source
2. A half-silvered mirror beam splitter
3. Flatter folding and rotating mirrors.

---

*Reference "Optical Throughput and Scattering in Optical ACI Systems," R.S. Kennedy, May 1977, Contract Working Paper, Material on File at DOT/TSC.

3.7.4 Final Modifications

In addition to these three improvements, several others have been implemented. The effects of these improvements on the optical configuration can be seen by comparing Figures 29 and 30. Figure 29 is a schematic of the present system showing the pierced mirror configuration. Figure 30 shows the modified optics system which reflect the modifications listed above and the more recent modifications listed below.

4. The light source (Arc) passes through a lens and aperture combination which shapes and defines the scanning beam. The source fields of view of the present system and the modified system are shown in Figure 31. As these graphs show, the modified system has a beam intensity which is at least as bright as that of the present system while requiring less power.
5. The half-silvered mirror beam splitter (Modification 2) allows further improvement through the use of a larger receiving aperture without sacrificing the effectiveness of the lamp (source) collimator.
6. A new receiver lens (lens 1) with a larger optical collecting area is used.
7. New baffling and light trap designs are used that have reduced the scattered light. Measurements have been made which indicate that the noise caused by scattered light in the modified system is 3 db less than the noise from the black label background.

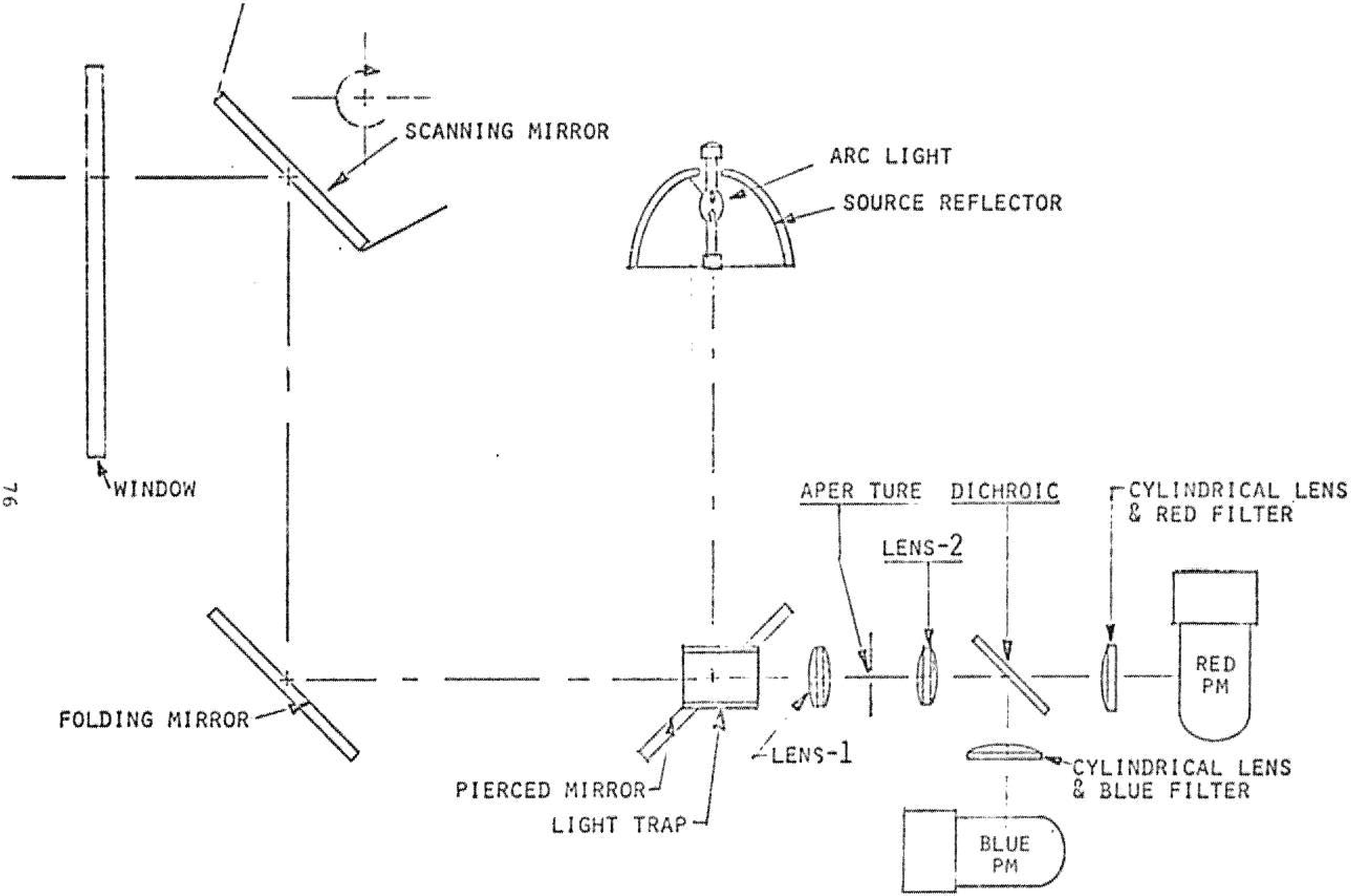

FIGURE 29. OPTICAL SCHEMATIC-PRESENT SYSTEM

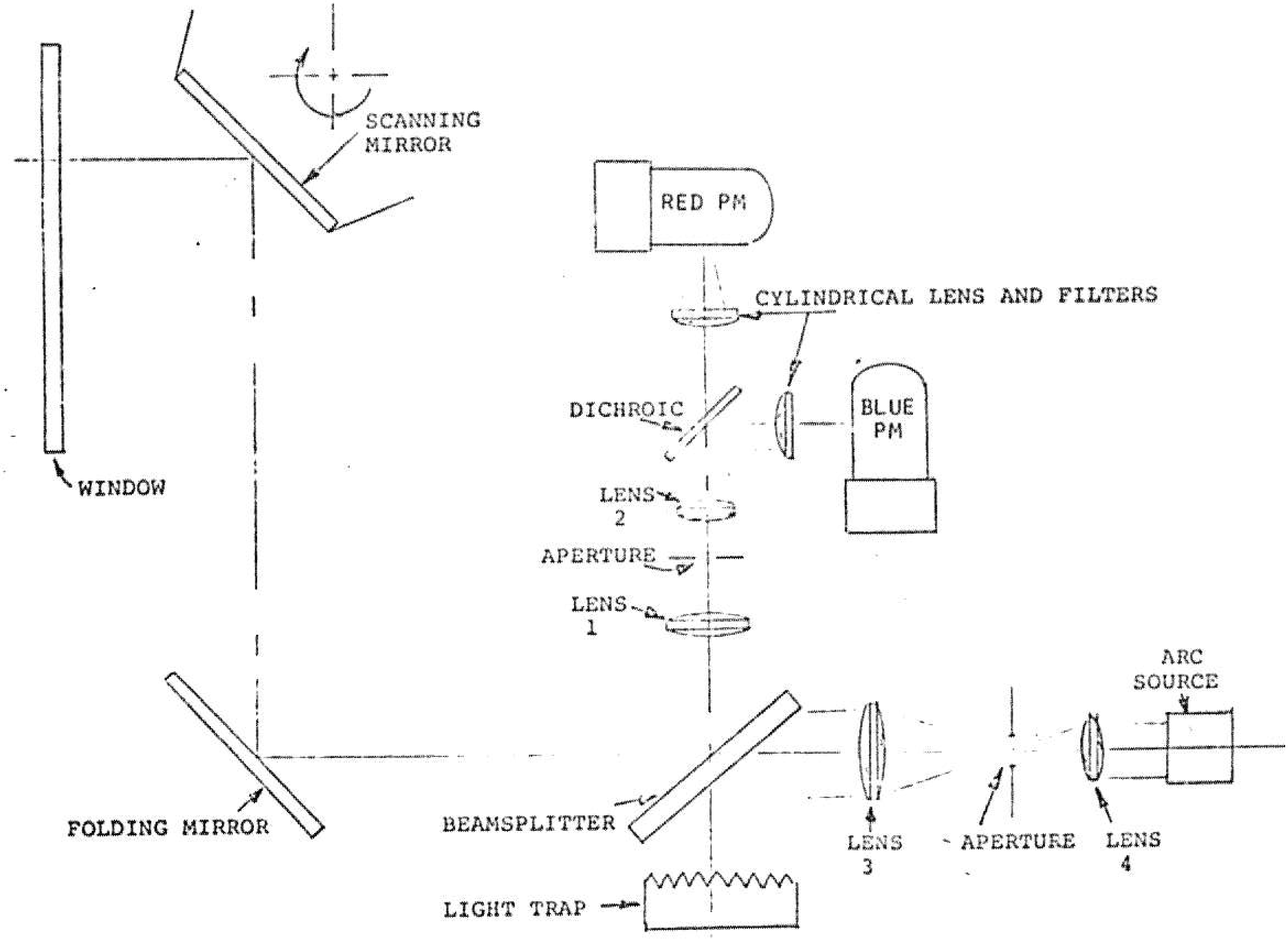

FIGURE 30. OPTICAL SCHEMATIC-MODIFIED SYSTEM

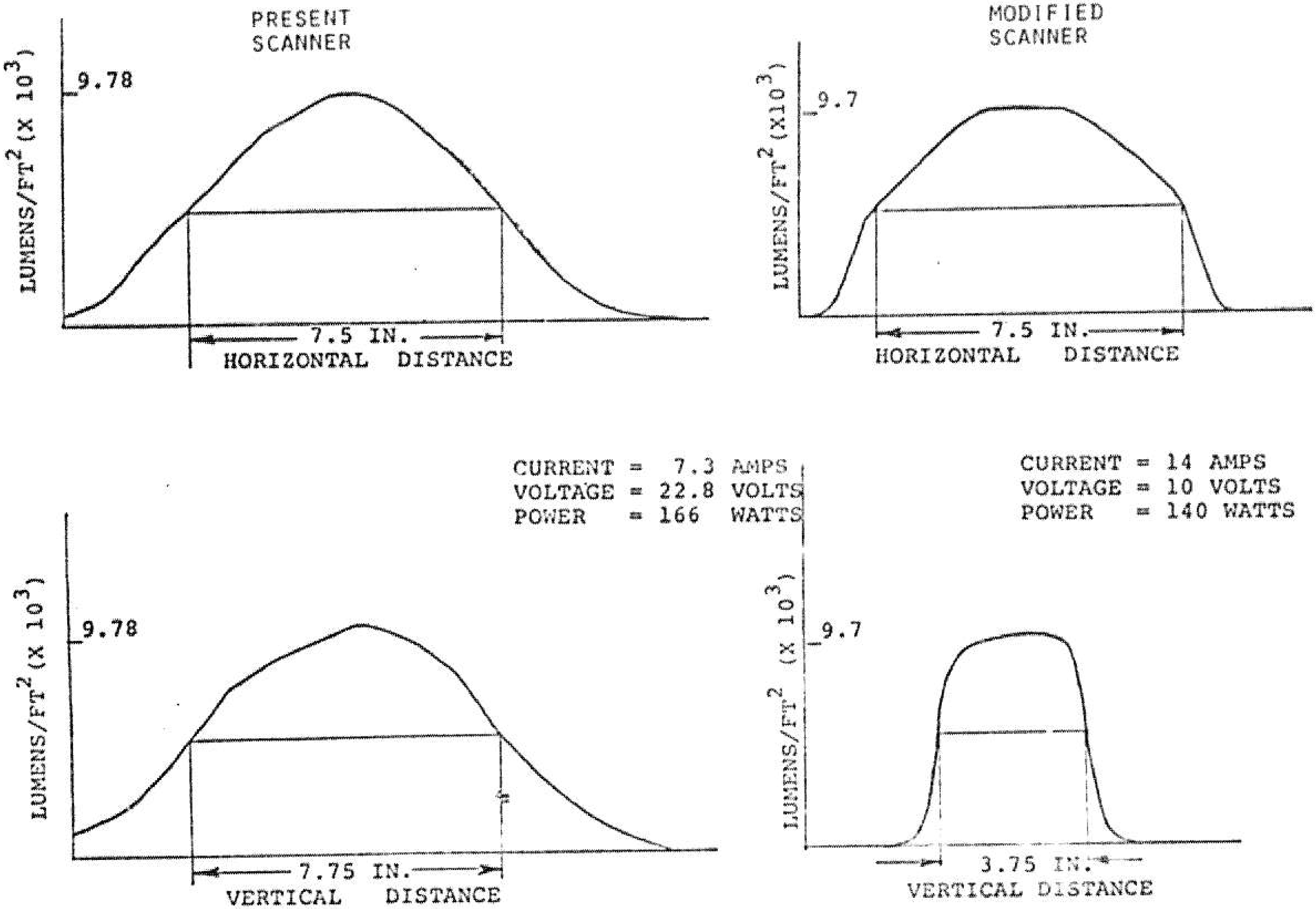

FIGURE 31. SOURCE FIELD OF VIEW

8. An infra-red filter has been placed in the red channel in front of the red PM. The addition of this filter decreases the cross talk between channels. It also allows the red PM to operate at a reduced temperature thereby reducing the noise caused by thermal effects.
9. Finally, the PM's have been replaced with units having greater sensitivity at reduced noise.

A comparison of receiver output characteristics for the present and improved system is given in Figure 32.

3.8 Other System Characteristics

The Wayside System is composed of block and wheel sensors and the Scanner System. The block signals indicate to the Scanner System that a train is coming. The presence of a car is signalled by a wheel sensor and the reflected light from the labels is read by the Scanner System which consists of a Scanner Head and a Signal Processor as shown in Figure 33. Electronically encoded label identification signals are formatted and transmitted for use by the railroads.

3.8.1 Interface Requirements

The Scanner System receives its power from the primary power distribution system on the rail wayside. The scanner system is isolated from the electrical effects of storms with a lightning protecting device. The Scanner System transmits a coded signal

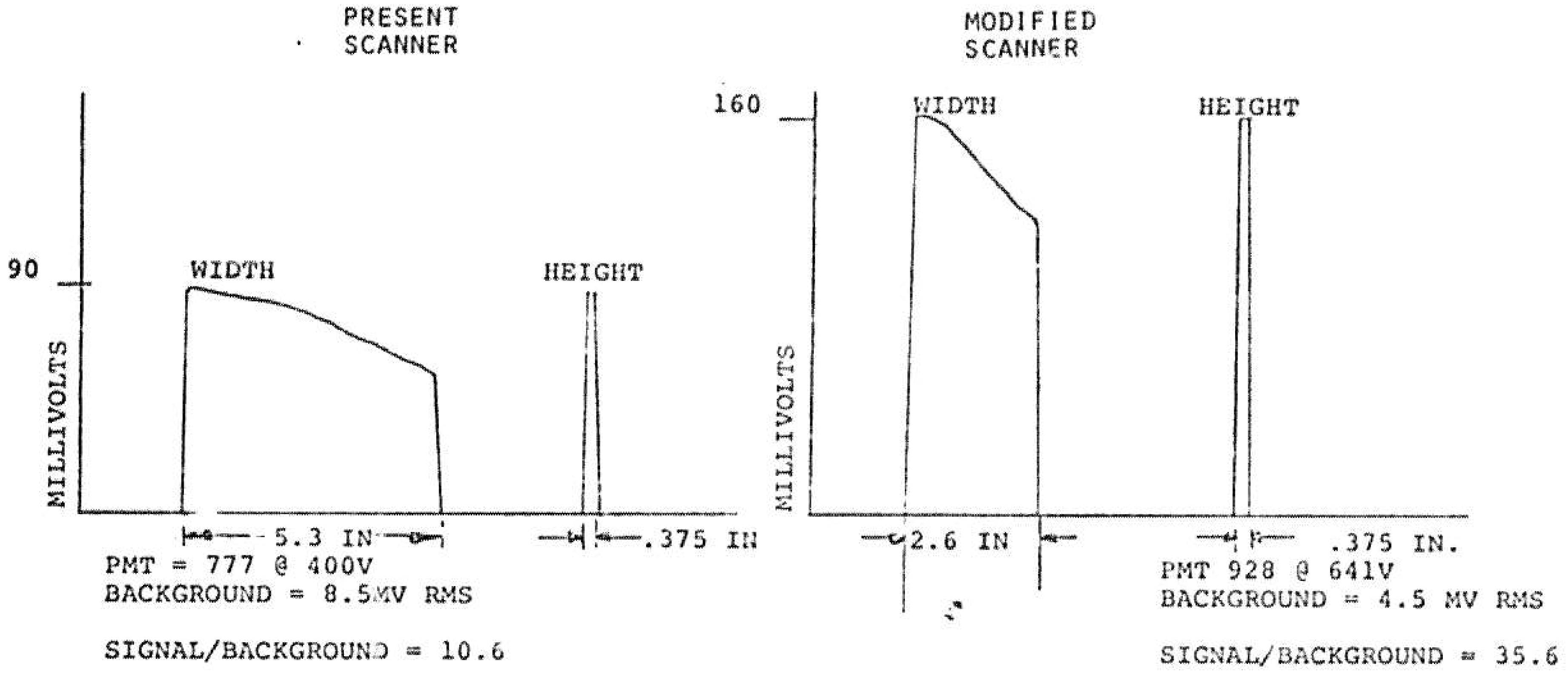

FIGURE 32, RECEIVER FIELD OF VIEW

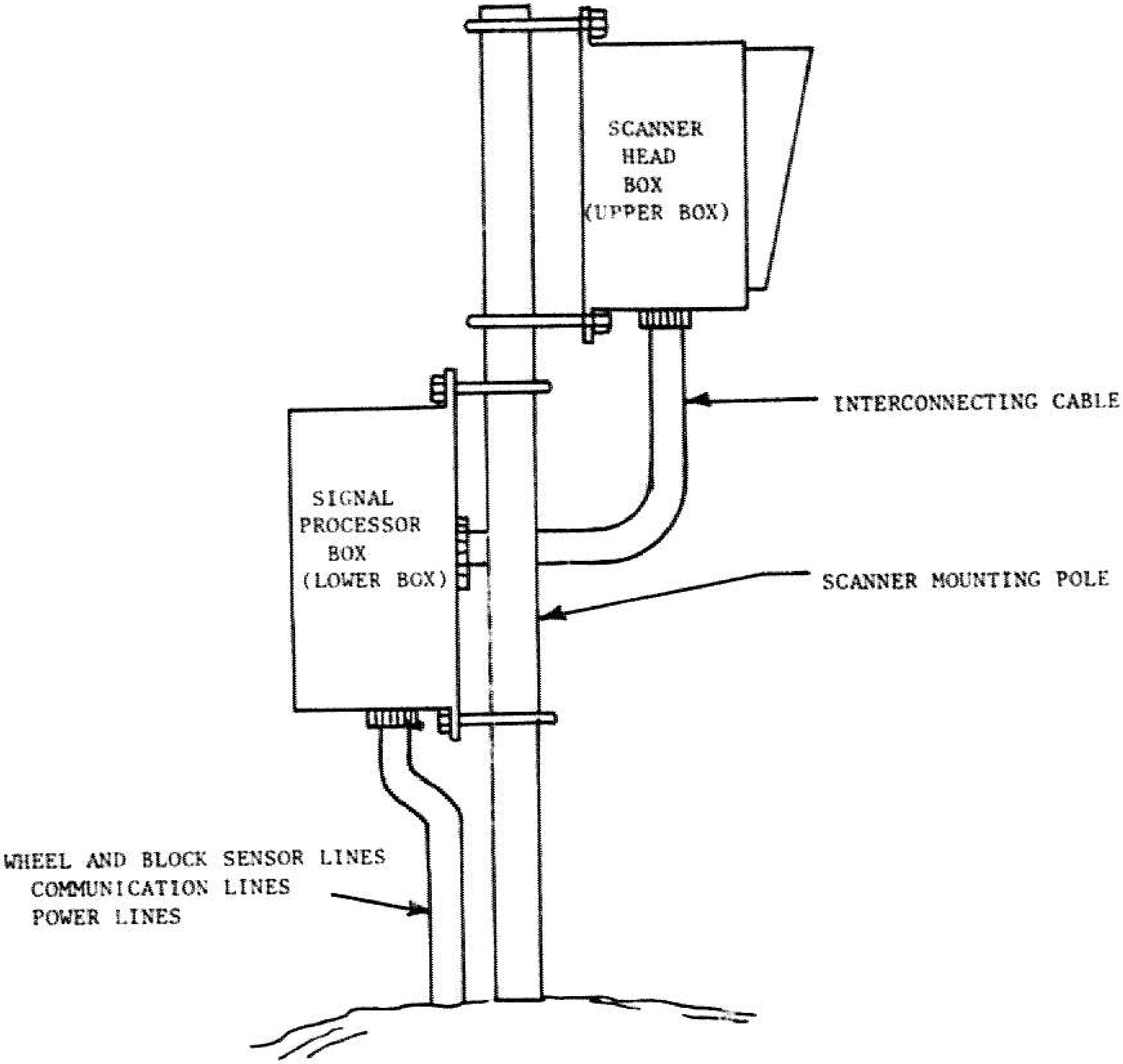

FIGURE 33. TWO-BOX (MODIFIED) SCANNER SYSTEM WAYSIDE INSTALLATION

with label identification information to a receiving station remote to the rail wayside.

3.8.2 Operating Voltage and Power Requirements

The Scanner System shall meet its performance specifications with single phase AC power at 120 VAC ±10% at a line frequency of 60 Hz ±5%. Input power will be less than 500 watts and the power factor will not be less than 0.7. The three wire input power cable to the scanner system shall contain a separate ground wire which shall be connected to the system boxes.

3.8.3 Power Outage

The software for normal operation of the two-box microprocessor scanner system shall not be destroyed if power is removed from the system. Immediately upon restoration of power, the system shall begin operation without the use of human operator assistance. The electronics shall be automatically initiated, there shall be no need to reload the programs, or reset clocks.

3.8.4 Power Conditioning

Protection from primary power variations (see Section 3.8.2) may be supplied by a single device servicing two or more Scanner Systems.

3.8.5 System Reset

The Scanner System shall be automatically turned on when a train is in the detection zone and off when the train leaves the detection zone. The detection zone is that block of track where the Scanner System is located.

3.8.6 Input Signal Characteristics

Block and Wheel Sensor inputs are normally open relay contacts which are closed only by block or wheel sensor signals. These inputs are protected from lightning and electromagnetic interference by opto-electronic signal isolators located in the Scanner System (lower box).

3.8.7 Output Signal Characteristics

The communications interface will, at user option, output information from the Scanner System in any of the following signal standards:

1. Demand Baudot or ASCII
2. Real Time Baudot or ASCII
3. Polled IBM 1050, 83B2, 83B3, 85-A, TS-15, SA-140, or TC-500.

The Scanner System output must conform to EIA Standard RS-232-C over dedicated communications facilities at a nominal transmission rate of 134.5 baud. Data transmission rates of up to 1200 baud are optional.

3.8.8 Mechanical Interface

The Scanner System shall be designed for mounting as a two box system on a wayside pole installation as shown in Figure 33.

3.8.8.1 Scanner System Compatibility

The Scanner System shall be designed to meet the performance requirements even when mounted close to other Scanner Systems.

3.8.8.2 Equipment Cabinet Electrical Interface

The lower box in the Scanner System shall include a terminal board for all electrical signal connections between the Scanner System circuitry and all external equipment. All signals including primary power signals shall be clearly marked and color coded.

3.8.9 Component Identification

The Scanner System described herein shall include two housings, one for the lower box and one for the upper box.

3.9 Design and Construction

3.9.1 General Design Features

The upper box (see Figure 33) shall not exceed the following dimensions: height 24", width 24", depth 12". The lower box shall not exceed the following dimensions: height 36", width 24", depth 12".

3.9.2 Selection of Specifications and Standards

All specifications and standards, other than those identified in Section 2.1 of this document must be approved by DOT/FRA prior to incorporation in the system.

3.9.3 Materials, Parts, and Process

The Scanner System boxes or enclosures will be made from steel. No vacuum tubes except for the photomultipliers will be included in the design. No switching relays shall be used in the electronic design.

3.9.4 Standard and Commercial Parts

The Scanner System boxes shall be constructed in a manner providing a maximum degree of standardization of parts. Non-standard parts must be approved by DOT/FRA before being incorporated into the design. Standard part is defined as any "off-the-shelf" component presently utilized in design.

3.9.5 Printed Circuit Boards

Printed circuit cards shall be made from 2 ounce copper on glass epoxy a minimum of 1/16 inch thick, have gold plated connector contacts, and shall be coated with a moisture and fungus resistance coating.

3.9.6 Corrosion of Metal Parts

Metal surfaces subject to corrosion shall be given a protective finish.

3.9.7 Interchangeability and Replaceability

The operating circuit components shall be mounted on one side of printed circuit boards only. Cord wood construction is acceptable for all but the breadboard unit. Repair will be made by replacing circuit cards.

3.9.8 Workmanship

The Scanner System shall be constructed in accordance with standard good engineering Design and fabrication shall be in accordance with the following general philosophy:

1. Test points shall be provided on the circuit boards to facilitate maintenance and trouble shooting.
2. All manual adjustments shall be made inside the Scanner System box enclosures. It is desirable that the number of these adjustments be minimized.

3.9.9 Electromagnetic Interference

The Scanner System must meet its performance requirements without degradation by the electromagnetic environment of the railroad wayside.

3.9.10 Identification and Marking

The Scanner System shall have name plates which will be marked as follows:

1. OACI Scanner System
2. Either "Scanner Box" or "Processor Box"
3. Manufacturer name
4. Serial number
5. Date of manufacturer
6. Model Number
7. Major Configuration Identification Code (updated whenever changed).

All test points shall be clearly marked.

3.10 Wayside Environmental Specification

The OACI Scanner System shall be capable of meeting its performance requirements with a minimum of environmental control. Automatic shutdown will ensue if the environment is exceeded. The required operational environment is specified in the following paragraphs:

3.10.1 Temperature Range

The free air, steady state temperature will range from -70° to +134°F. The scanner system shall withstand a thermal shock of 20°F over a ten minute period within the range stated above.

3.10.2 Relative Humidity

Five percent to 100% including condensation due to temperature changes.

3.10.3 Altitude

One thousand feet below to 10,000 feet above mean sea level.

3.10.4 Wind

Velocity 0 to 100 mph at 68°F; 0 to 52 mph at -60°F.

3.10.5 Ice Loading

The Scanner Head box may be encased in 1/2 inch radial thickness of clear ice. The optical window must be shielded from the weather to remain clear.

3.10.6 Transportability

The OACI Scanner System shall be designed and packaged so that two people can remove each of the boxes from the wayside support pole or make a new installation in one (1) hour excluding transportation time, assuming the new location does not require modifications prior to the Scanner System installation.

The OACI equipment and associated support equipment shall be designed for rail transportability. If shipping containers are used to satisfy this requirement, the OACI vendor shall furnish all necessary shipping containers. Such containers shall be reusable by the railroad for subsequent shipment of the equipment.

3.10.7 Safety

The following safety specifications include the effect on the system if a component fails, the safety of maintenance personnel, and the protection of the Scanner System from electrical disturbances. The scope of concern includes, but is not limited to, physical, chemical, electrical, and radiation hazards. Also equipment shall be protected from electrical and thermal overload for safety reasons.

3.10.7.1 Safe Failure Mode

If the Scanner System has a component malfunction, an open feedline, or loss of commercial power, it shall automatically indicate the state associated with train occupancy in the Scanner System signal block.

3.10.7.2 Personnel Safety

Personnel safety shall be paramount in the scanner system equipment design, construction, installation, testing, and maintenance of the equipment. It must not be compromised to save costs. A basic rule is that the operation of the Scanner System shall not present any hazard to personnel, either on the ground or aboard the train (crew or passengers). During maintainability design, care shall be taken that there can be no accidental contact of personnel with voltages higher than 28 Volts. It is also important that no sharp corners or curves exist which present a hazard, and that the ACI systems not interfere with any safety equipment or safety appliances. Some examples of hazard prevention as categorized above are the following:

1. High voltages shall be isolated to prevent accidental contact by personnel.
2. Sharp mechanical protrusions are prohibited.
3. Grounds shall be provided for each box to eliminate the boxes floating above ground.
4. Ground currents and loops will be minimized to prevent personnel being exposed to unsafe voltages.
5. Safety for personnel during maintenance, fabrication, installation, and operation will be insured by good design and adequate training.

3.10.7.3 Scanner System Protection and Safety

The Scanner System shall be protected against failure to meets its performance specification caused by electrical storms and lightning.

The possibility of equipment destruction shall be reduced by electrical overload sensing and overtemperature sensing. All materials used (especially electrical/electronic components) and circuit boards shall be of the non-flammable type and approved by UL and CSA.

Equipment safety shall meet U.S. and Canadian federal and also state regulations, in addition to complying with railroad industry, EPA and OSHA requirements.

3.10.8 Shock and Vibration

The shock and vibration environment for the Scanner System is a function of the proximity to the rails and depends on the installation foundation. The high frequency energy input from a passing train is absorbed by the gravel ballast while the low-frequency components of the shock and vibration are transmitted to the Scanner System (see Figures 34 and 35). The system shall survive the wayside shock and vibration environment.

3.10.9 Salt Fog

The Scanner Systems may be exposed to salt fog and shall not be affected by a repeated momentary contact with salt water, such as may occur during splashing by external causes.

Scanner Systems shall not be affected adversely by being installed near bridges over salt water bodies in an environment of salt mist.

3.10.10 Precipitation

The rate of rainfall may be one inch per hour and may fall at 45° to the vertical. Consideration shall be given to flooding in the design of the Scanner System installation. The Scanner System may be splashed by water. The rate of snow fall may be

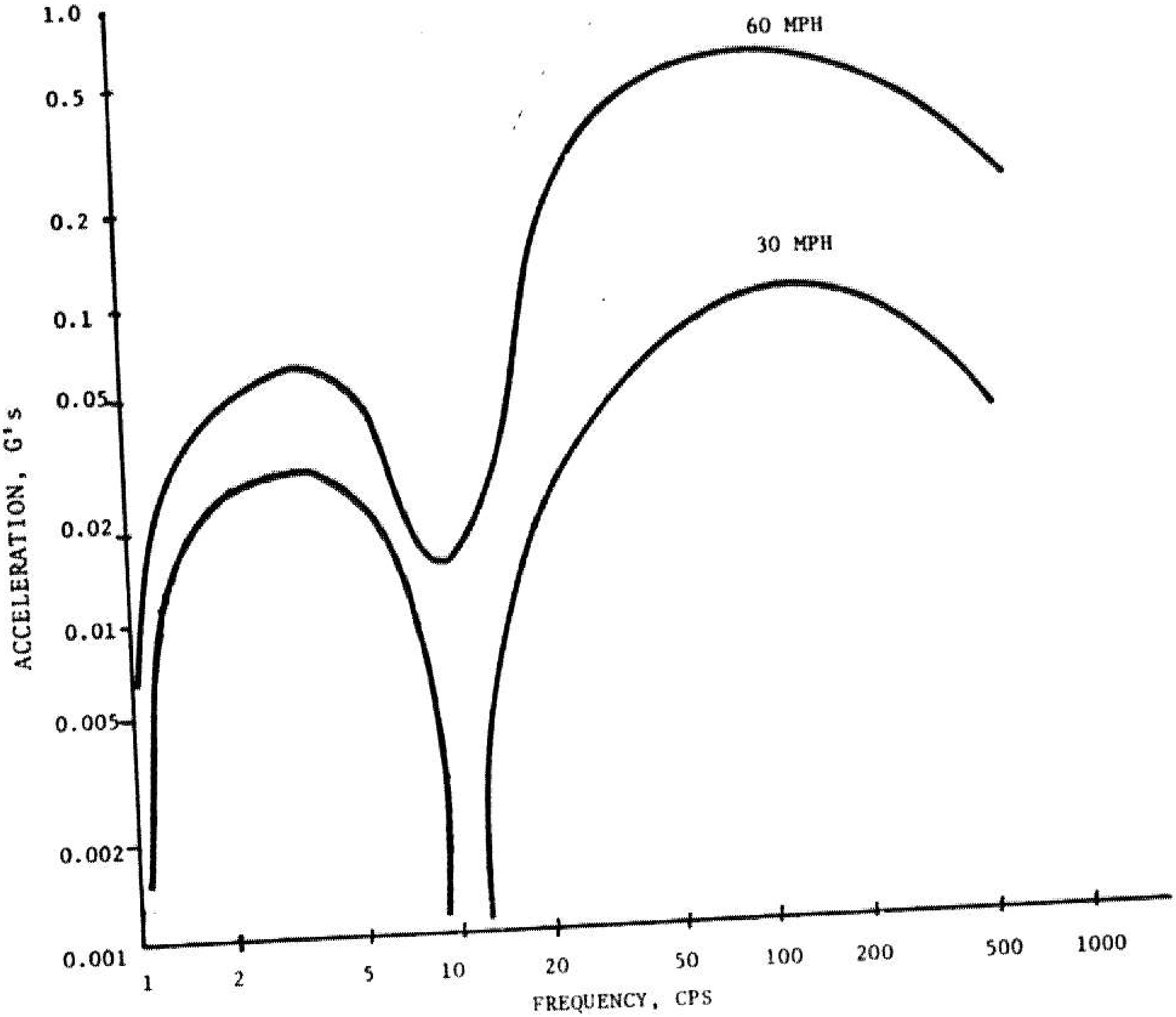

FIGURE 34. VIBRATION INDUCED VERTICAL ACCELERATION

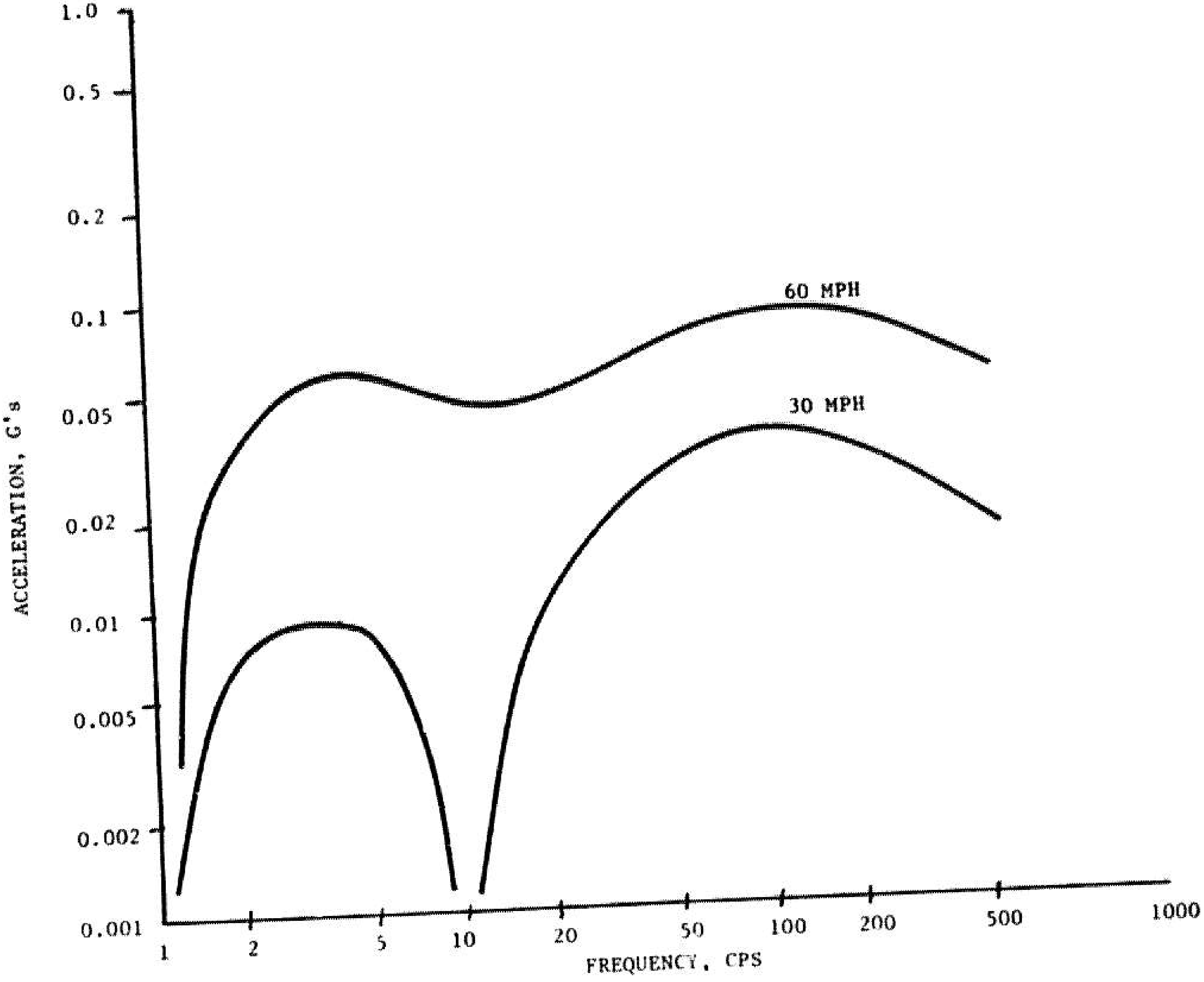

FIGURE 35. VIBRATION INDUCED LATERAL ACCELERATION

eight inches per hour and it may be in the form of blowing, wet snow. Ice or white frost may form on exposed surfaces.

The Scanner System shall not be permanently adversely affected by any of these occurrences.

3.10.11 Solar Radiation

Equipment design shall allow for the mean solar constant of 429 Btu per square foot per hour. This will result in raising the temperature of the rails, cars, and ground above the free air temperature. Ultraviolet radiation will impinge on all exposed surfaces.

3.10.12 Acoustical Noise

Equipment failure or error shall not result when the equipment is exposed to levels of acoustical noise at 140 dB above 10^{-16} watts/cm^2.

3.10.13 Spilled Lading

Since a large variety of bulk chemicals in both solid and liquid form are transported by rail, a large variety of chemical spills is possible. System performance shall not be affected by brief exposures to the common bulk chemicals. Examples of such are sulphuric acid, benzene, anhydrous ammonia, chlorine, caustic soda, liquified natural gas, bulk sugar (raw and refined), iron ore, coal, acrylonitrile, methanol, styrene, and petro-chemicals.

3.10.14 Fungus and Moisture Resistance

No materials shall be employed which support fungus growth.

3.10.15 Insects, Birds, Animals (including Rodents)

The Scanner System shall not be susceptible to failure or error due to intrusion or attack by animals, birds, or insects.

3.10.16 Electromagnetic Interference and Susceptibility

The Scanner System shall receive Federal Communications Commission (FCC) and Department of Communications (DOC) certification for operation on an unrestricted basis, including the vicinity of airports, if required.

The OACI system shall not be susceptible to electromagnetic radiation over a broad range of frequencies, particulary as used in the vicinity of airports, as used by aircraft, and as used by the railroads in microwave communication.

The railroads will supply lightning protection for prime power and for the transmission line interface. Any transient suppression required is the responsibility of the Scanner System supplier.

The fields induced by diesel traction motors or electromagnetic loaders of scrap iron shall not affect operation of the OACI system. The system shall not be susceptible to AC or DC electric locomotive operation using 50 kV power.

The system shall be usable in the vicinity of high power transmission lines carrying up to 1,000 Amperes and operating at up to 500,000 Volts above ground potential.

3.11 Power Dissipation and Environmental Control

The power dissipated in the scanner head box and signal processor box is approximately 200 watts and 350 watts, respectively. This power will be dissipated in the mid-temperature range from 0° to 40°C with conduction through the surface of the case. Ambient temperatures higher than 25°C can cause a built-in circulation fan to begin operating which will aid in carrying the heated air from the heat source of the electronics, motor, or arc lamp to the enclosure surface. Ambient temperatures lower than 0°C will be compensated for by heat from internal heat sources. The box will be sealed and no additional cooling and/or heating will be necessary.

3.12 OACI Cost and Reliability

3.12.1 Introduction

Three equipment configurations are considered with respect to cost and reliability. The first of these is the system (1976 revision levels) built by Computer Identics Corp. (CI). This is called the "present" or "commercial" system. The second, referred to as the Modified System, includes the modifications tested by TSC through May 1977. The final configuration, referred to as the Experimental System, is the set of major replacements designed and tested as of June 1978. The OACI equipment of the Servo Corporation of America was not available to TSC for performance comparison tests; however, examination of their documentation and an in-factory inspection of the equipment indicate that the modification costs and savings should be similar to those of the CI system.

Modified System modifications consist of: (1) optics improvements; (2) a front-end amplifier with a wider dynamic range; (3) improved shielding; and (4) an improved detector or digitizer (standardizer) of higher stability and larger dynamic range. The optics modifications include (1) a new Varian arc source, with integral reflector, (2) new stationary mirrors, (3) a new spin-cube with flatter, more rigid mirrors, and (4) a new photomultiplier (red channel) with an infrared blocking filter.

The Experimental System uses the Modified System optical, front-end amplifier and shielding modifications. It, however, replaces the remainder of the OACI detection and decoding subsystems with two major components: (1) a label locator and (2) a post detection processor including improved label reading from multi-scan information. The Experimental System replaces the present four-box system with its air conditioned hut with a two-box system mounted entirely on the railroad wayside pole.

3.12.2 Cost

3.12.2.1 Initial

3.12.2.1.1 Present System

An estimate of the field installed cost of the present scanner system has been prepared based on actual experience of two railroads on two installations: a two-scanner system for the Santa Fe Railroad (Table 4); and a four-scanner system for the Canadian National Railroad (Table 5). The disparity in accounting methods between these two systems necessitates a summation of costs and division among the scanners. This results in the allocation of the label data processor, hut, air conditioning, etc., to the costs of the average scanner system. Line entries are tabulated as reported in 1973 values and augmented at a 6% per year inflation rate to 1977 price levels. The 1977 cost totals are used for inter-configuration comparisons. Since all costs are in 1977 dollars, all comparisons at different dates will have to be adjusted.

Table IV details the Santa Fe installation which yields an average scanner cost of $54,498. Table 5 details the Canadian National installation which yields an average scanner cost of $40,600. The range of $40,000 to $54,000 is regarded as a reasonable range of installed costs.

TABLE 4: PRESENT SCANNER MATERIALS COSTS

(SANTA FE)

ITEM	PARTS	LABOR	TOTAL COST	
		(1973)	(1973)	(1977)
2 Scanners	66,000	1,200	67,200	83,328
Hut with Standby Power	8,500	1,100	9,600	11,904
Site Preparation	750	1,750	2,500	3,100
Fencing	600	1,000	1,600	1,984
Track Circuits	5,000	2,000	7,000	8,680
TOTAL				$108,996
Average Cost Per Scanner				$54,498

TABLE 5: PRESENT SCANNER MATERIALS COSTS

(CANADIAN NATIONAL)

ITEM	COST	
	(1973)	(1977)
Signal Materials	$13,900	$18,070
Four Scanners	$64,682	$84,078
Taxes and Fees	$ 7,115	$ 9,250
Spares, Hut, and Air Conditioning	$25,995	$33,794
Labor	$13,230	$17,199
TOTAL		$162,400
Average Cost Per Scanner		$40,600

3.12.2.1.2 Modified System

Since the modification group is a plausible candidate for retrofit to existing installations, costs by item are tabulated for retrofit and new manufacture. Retrofit costs are the estimated component purchase costs without credit for old parts (except as noted). New manufacture costs are the difference between component purchase costs and the replaced component costs. The latter are taken from Schedule A of the CI - TSC bailment agreement and the 1974 pricing information from Computer Identics to the U.S. Government, 1977.

Table 6 details these costs; the final purchased parts costs are $4,500 for the retrofit mode and $1,735 for new manufacture. The retrofit costs include parts, product development, labor, and overhead. The new manufacture label differential is negligible.

TABLE 6: MODIFIED SYSTEM RETROFIT AND NEW MODIFICATIONS COSTS

ITEM	RETROFIT[1]	NEW MFG COSTS[2]
Infrared Filter	5	5
Photomultiplier	110	100
Improved Lens	260	200
Line Driver	125	5
Standardizer Boards (2)	3440	1300
Shielding Improvement	15	5
Arc Lamp, Housing	475	105
Mirrors	20	5
Spin Cube Assembly (motor exchange)	50	10
TOTAL	$4,500	$1,735

[1] Retrofit costs include parts, product development, labor and overhead.

[2] New manufacture costs are differences between the component purchase costs and replaced component costs.

3.12.2.1.3 Experimental System

New manufacture equipment costs for the Experimental System are detailed in Table 7. Scanner subsystem costs are the parts list prices plus the modified scanner modification costs (Table 6). This totals $21,059 per scanner.

Table 8 combines this number with installation cost elements from the Santa Fe installation (Table 4) for a two scanner installation. The total cost is then divided between the two scanners giving an average scanner cost of $27,056. This figure, conservatively, includes $1984 for fencing, which may not be needed on a two-box pole mounted system. Deleting this would give a per scanner cost installed of $26,064.

Although it is not considered advisable to completely retrofit the present scanner with Experimental System modifications, the retrofit costs are estimated at $17,200. These costs, again include parts, product development, etc., but exclude site preparation, fencing, and track circuits which would remain unchanged. The costs also assume some salvagable components in the system being retrofitted (e.g., photomultipliers, motor, etc.).

3.12.2.2 Maintenance

Maintenance data, taken from the 1975 CRTIS studies, are summarized in Table IX for the present commercial system. The maintenance costs of Modified System are, conservatively, assumed to equal those of the commercial system.

TABLE 7: EXPERIMENTAL SYSTEM NEW EQUIPMENT COSTS

ITEM	COST[1]
Post-Detection Processor (Microprocessor) System	$ 4,851
Scanner Subsystem	$15,734
Interface Unit	$191
Signal Input Nest	$133
Tape Unit and Interface	$100
Software Kit	$50
TOTAL	$21,059

[1] Includes parts, labor, product development, and overhead.

TABLE 8: EXPERIMENTAL SYSTEM INSTALLATION COSTS

DESCRIPTION	PARTS	LABOR	COST
2 Scanners	$41,248	$1,200	$42,448
Site Prep			$ 1,000
Fencing			$ 1,984
Track Circuits			$ 8,680
		TOTAL	$54,112
	Average Scanner Cost =		$27,056

TABLE 9: MAINTENANCE COSTS - PRESENT SYSTEM

Number of Calls	Type	Completion Time	Cost[1]	Annual Cost[2]
6	45 day	4 hrs.	120	720
3	Quarterly	8 hrs.	240	720
1	Annual	12 hrs.	360	360
11	On-Call	5 hrs.	150	1650
	Parts			1650
	Preventive Maintenance Subtotal			1800
	TOTAL.............			$5090

---

[1] Labor Rate $30/hr.

[2] Note: Cost assignments are 60% scanner and 40% wheel detector.

The Experimental System reductions in maintenance costs are itemized in Table 10. These reductions are due to the increased Mean-Time-Between-Failures (MTBF) from 35 to 114 days (see Table XI) and to a reduced Mean-Time-To-Repair (MTTR). This permits cost savings in five areas. First, the 45 day service call may be reduced to 135 day calls, interspersed with the quarterly and annual service calls. Second, assuming that one-third of the on-call maintenance and parts costs are related to MTBF failure predictions, these elements may be reduced by at least 25%. Third, the use of an arc lamp with integral reflector may be expected to remove at least 2 hours of alignment time (MYYR) from the quarterly and annual maintenance schedules. Fourth, a simpler annual lamp alignment, plug-in modularity of the system elements. And, fifth, less frequent replacement of major parts may be expected to remove another 4 hours from the annual maintenance load.

TABLE 10: EXPERIMENTAL SYSTEM MAINTENANCE COST SAVINGS

ITEM (See Table IX)	RATIONALE FOR SAVINGS	SAVINGS
45 day	MTBF increase; replace by 135 day .67 x $720	$480
Quarterly	MTTR decrease 2 hrs. x 3 x $30	$180
On call	MTBF weighted for failure model .25 x $1650	$412
Annual	MTTR decrease 6 hr. x $30/hr.	$180
Spare parts	MTBF increase weighted for failure model .25 x $1640	$418
	TOTAL	$1670
	Commercial, Modified System costs	$5090
	Experimental System savings	$3420

TABLE 11: RELIAPILITY FIGURES

TASK NO.	DESCRIPTION	MTBF (HOURS) CONFIGURATION PRESENT	I	II
5	Clean Window	450	450	450
6	Retime Clock	185A	185A	B
8	Reload Program	455A	455A	C
9	Replace Wheel Sensor Board	998	998	D
10	Replace HVPS	628	628	1500E
7	Replace Computer	802	802	3000F
20	Replace Arc Lamp Power Supply	263	263	500G
25	Adjust Channel Gains	744	744	1000
29	CI - 108 Board	739	739	D
34	Replace Lamp Power Supply Fuse	1416	1416	3000G
39	Replace Optical Box	1119	1119	1119
40	CI - 103 Board	1049	1049	D
42	CI - 102 Board	896	896	D
43	Replace Scanner	793	1400	1400
49	Replace Lamp	952	2000H	2000H
	COMBINED MTBF	35	36	114

NOTES:

A. Corrected for the fact that 1 out of 5 calls for this service required actual repair.

B. Function accomplished by microcomputer; item eliminated from MTBF calculation.

C. Program resides in non-volatile memory; item eliminated from MTBF calculation.

D. Deleted assembly.

E. Upgraded power supply - C.I., 1976.

F. Reduced component count of microprocessor.

G. New Arc lamp power supply.

H. Longer life lamp.

3.12.2.3 Power Costs

For the present system, for a Label Data Processor (LDP) servicing 2 scanners, electric power costs are dominated by two items: heating/air conditioning and computer power. Heating/air conditioning may be estimated as 1500 watts at an annual duty cycle of 0.4. At $0.03 per KHW, this gives an annual cost of $79 per scanner. The PDP-8 used in the Computer Identics System, with attached peripherals, consumes approximately ten amperes, or 1200 watts. At $0.03 per KWH, this is a cost of $157 per year per scanner.

The microprocessor replacement may be expected to consume less than 100 watts, or $26 per year. The total of these savings is $210 per year per scanner. These costs were not identified in the cost savings for a 1000 unit 20 year use of OACI Experimental System improvements. In the aggregate, a savings of $4,200,000 (1977 dollars) results.

3.12.3 Reliability

For practical purposes, the reliability of a system may be obtained from the Mean-Time-Between-Failures (MTBF) of its critical components, i.e., those with an MTBF of less than 5000 days, per the 1975 CRTIS report. Critical reliability figures are tabulated in Table XI. The following comments are included to explain various changes in MTBF's for the advanced configurations. The computer program resides in fixed, non-volatile memory, eliminating reloading requirements. The associated clock is protected by power supply isolation and filtering. Note that the real time clock maintenance calls were exaggerated in the CRTIS report because only one out of every five calls actually required a repair.

The system MTBF is calculated from the component MTBF's as follows:

$$MTBF = [\ \Sigma[\ (MTBF)i\ ]^{-1}\ ]^{-}\ ]$$

where (MTBF)i is the MTBF for component i.

3.13 Other Data - Experimental System

3.13.1 Packaging Data

The side view of the two-box scanner system appears in Figure 33. The box which is mounted on the highest portion of the support pole, the scanner head box, includes the following subsystems:

1. Front end line driver assembly
2. Front end signal filter assembly
3. Scanner head power supply assembly
4. Optics assembly
5. Automatic voltage control system.

The lower box, the signal processor box, houses the following subsystems:

1. Digital Label Locator Subsystem
2. Post Detection Processor Subsystem

3. Module Processor Subsystem

4. Power Supply Subsystem

The contents of the two boxes are listed in Tables 12 and 13.

TABLE 12: SCANNER HEAD BOX CONTENTS

Scanner Head Box (Box 1)

- Front End Line Driver Assembly
  - Red Photomultiplier (PM)
  - Red Dynode Assembly
  - Red Line Driver
  - Blue Photomultiplier (PM)
  - Blue Dynode Assembly
  - Blue Line Driver
- Front End Signal Filter Assembly
  - Red Bandpass Filter
  - Blue Bandpass Filter
- Scanner Head Power Supply Assembly
  - High Voltage PM Power Supply
  - Line Driver Power Supply
  - Arc Source Power Supply
- Optics Assembly
  - Lens Assembly
  - Mirror Assembly
  - Motor Assembly
- Automatic Voltage Control System
  - High Voltage Power Supply Control Assembly
  - Optical Sync Assembly
  - Variable Gain Amplifier Gain Control

TABLE 13: SIGNAL PROCESSOR BOX CONTENTS

Signal Processor Box (Box 2)

- Digital Label Locator Subsystem
  - Start/Stop Detector
  - Intermodule Pulse Detector
  - Label Recognition Logic
  - Start/Stop/Time Calculator
- Post-Detection Processor Subsystem
  - Z80-MCB
- Module Processor Subsystem
  - IC Standardizer
  - Gate Generator
  - Data Buffer
- Power Supply Subsystem

3.13.2 Environmental Control

The power dissipated in the scanner head box is approximately 200 watts. This power is easily dissipated in the mid-temperature range from 0° to 40°C with conduction through the surface of the case (see Figure 36). Ambient temperatures higher than 25°C cause a built-in circulation fan to begin operating which aid in carrying the heated air from the heat source of the electronics, motor, or arc lamp to the enclosure surface. Ambient temperatures lower than 0°C are compensated for by the heat from the internal heat sources. The box is sealed and no additional cooling and/or heating are necessary. (The existing industry scanner has an internal power dissipation of 150 watts and it easily survives the wayside environment of the railroad. The new configuration includes about fifty watts more power.)

The signal processor box is shown in Figure 37. The maximum dissipation inside this box is 350 watts. Most of this heat is carried away through the sides of the box.

3.13.3 Exterior Connections

Any electrical connection between the two boxes is made via the interconnecting cable as shown in Figure 33. Signals which are included in this tube are as follows:

1. The blue photomultiplier signal.
2. The red photomultiplier signal.
3. Line power and control signals to the scanner head power supply assembly.

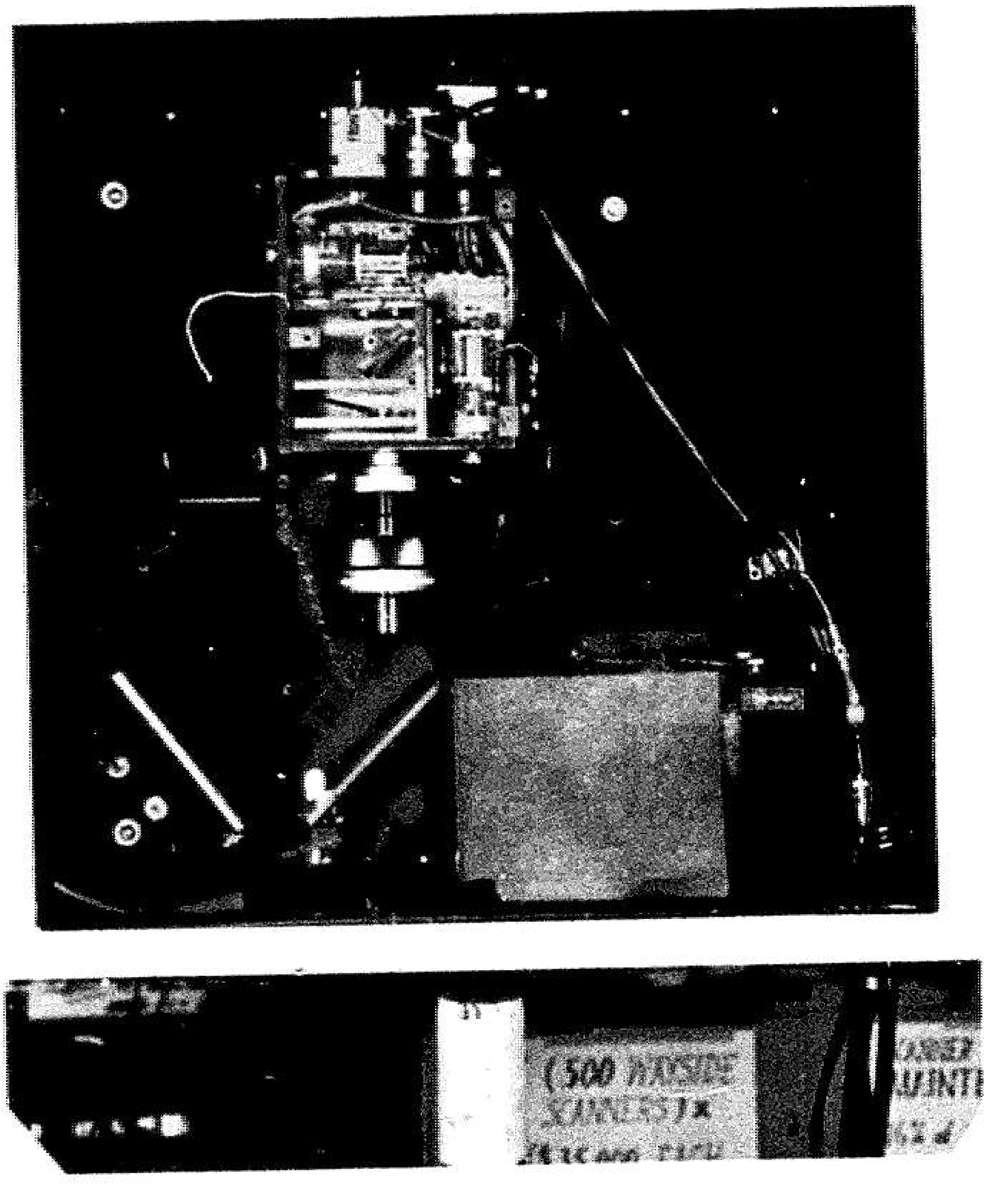

FIGURE 36. SCANNER HEAD BOX

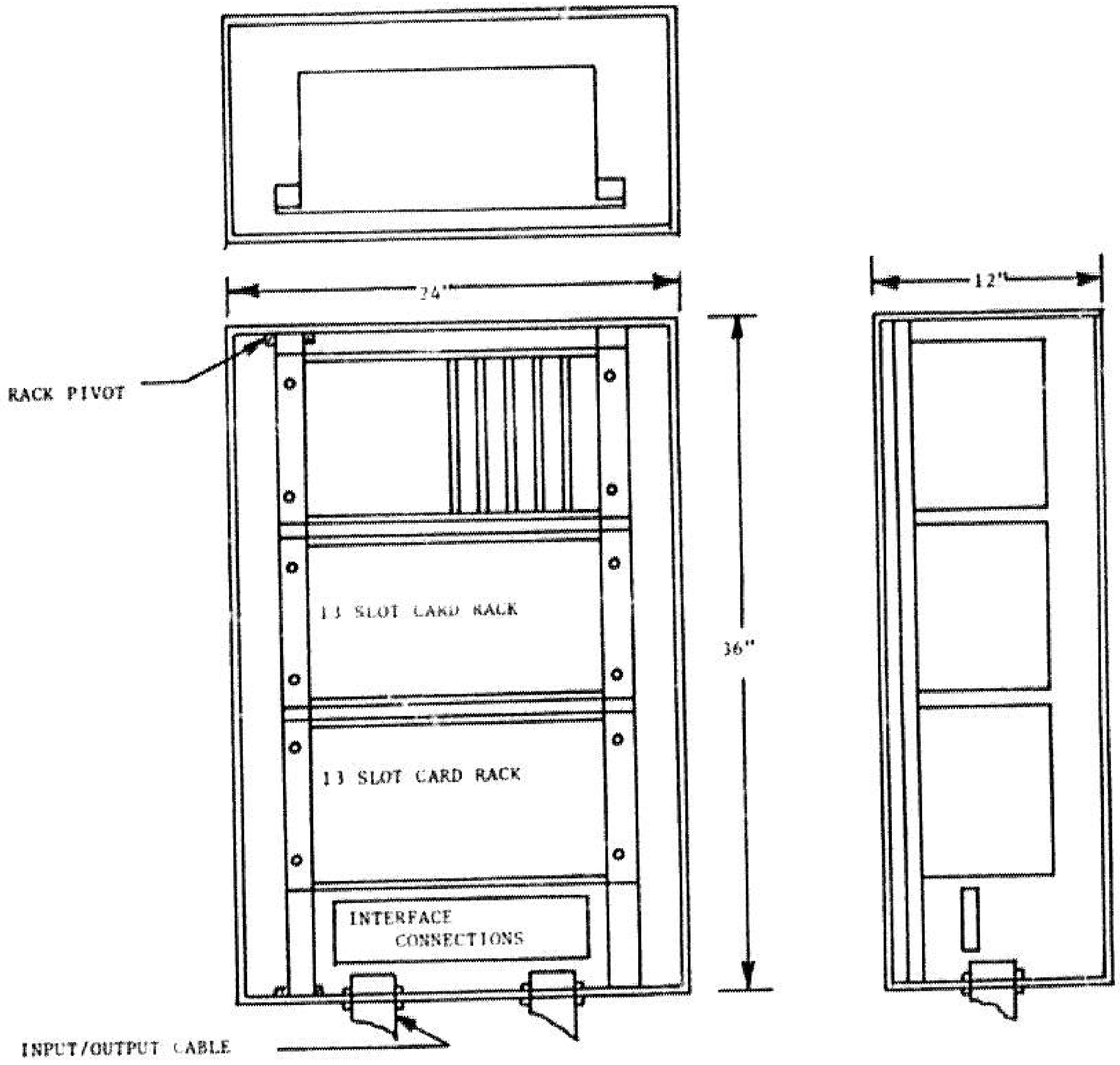

FIGURE 37. SIGNAL PROCESSOR BOX

4. Motor power to the Motor Assembly in the Optics Assembly.
5. Synchronization signals.

Input and Output (I/O) signals (such as the IBM1050, the 60 ma teletype current loop, modem signals, or customer required interface) travel via a conduit to the scanner mounting pole into a trench in the earth. This conduit connects to a telephone or data communications line. Wheel and block sensor signals, line power, and control signals are also fed in through the underground cable.

4. QUALITY ASSURANCE PROVISIONS

This section reviews the TSC Dynamic Test Facility and describes the test method used in the readability tests which indicate overall readability improvements achieved with the improved scanner system.

4.1 Dynamic Test Facility

Figure 38 is a photograph of the DOT/TSC laboratory test facility where the readability improvement tests were conducted. One of the major tasks in the Phase II OACI program was the construction of an OACI test facility at TSC which would simulate the actual railroad wayside motion of the labels past the scanners. The motion would enable the scanners to look over the entire label at the car distances and speeds encountered in the field. The facility, illustrated in Figure 38, is made up of the following:

1. A Label Motion Generator holding up to ten labels which provides horizontal motion of the labels past the scanner at speeds up to five miles per hour from a chain-driven carrier. A winch drive motor is included to move the entire ten-label carrier vertically so that, with a corresponding adjustment in the scanner horizontal distance, all possible label locations for the various car types can be tested.
2. A test station which includes a microcomputer, a display and keyboard, a printer, an extensive hardware

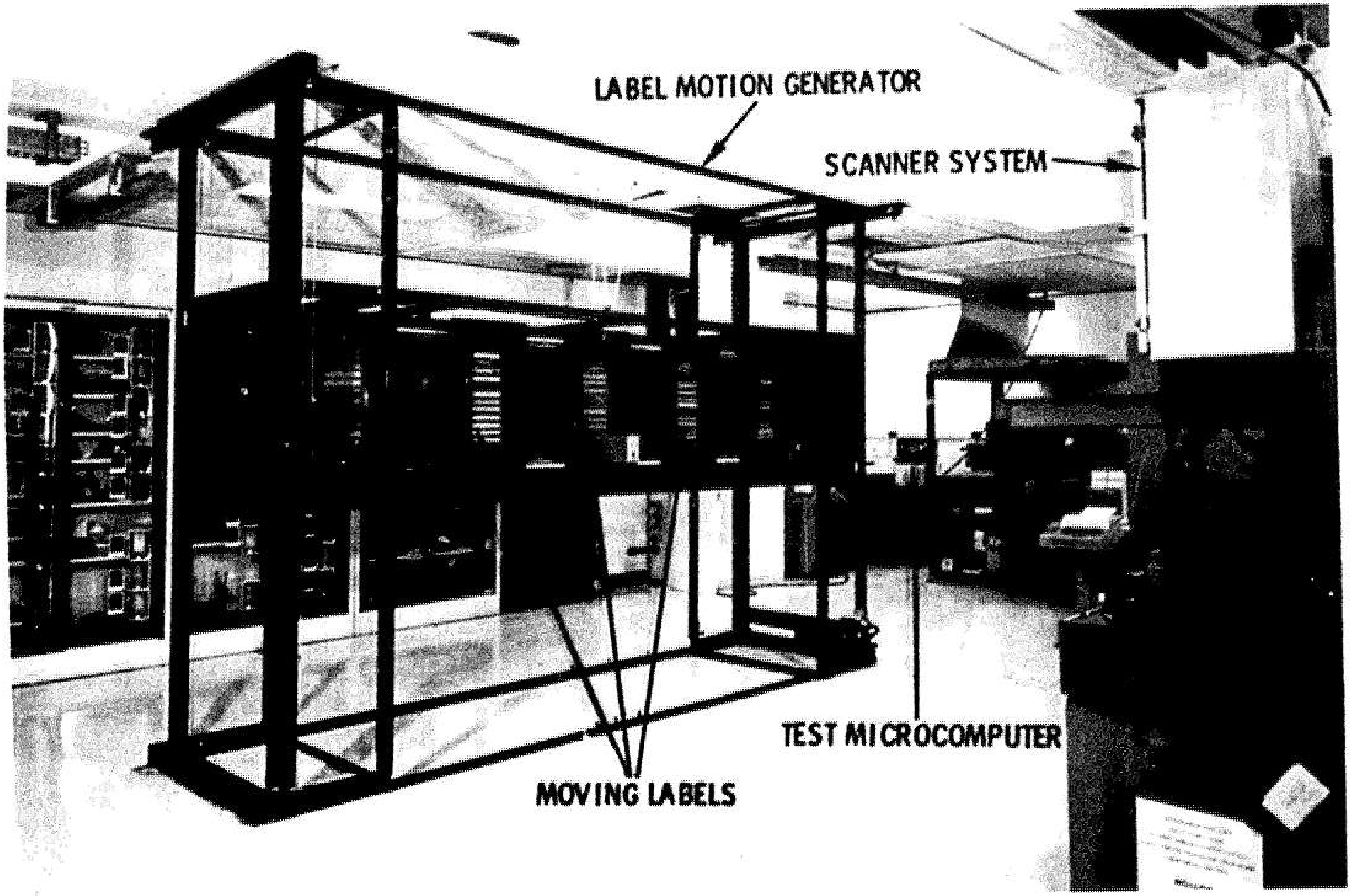

FIGURE 38. LABEL TESTER

interface to both of the scanner systems, and the Label Motion Generator. Microcomputer software was developed to provide automatic control of the label motion, printout of the label read status, data logging on cassette tape, and to simulate speeds higher than five miles an hour.

3. An off-line communication link to a computer facility for test data analysis.

The operation of the test facility started with the horizontal positioning of the two scanners (TSC experimental scanner and manufacturer's present scanner) in parallel with respect to the labels. A selected group of nine labels and a new label were then mounted on the Label Motion Generator with the carrier positioned at a fixed height. The test conditions (true label identification, speed, position, and number of read attempts of each label) were then entered on the keyboard and verified on the display. After this, the tests were conducted automatically in the following sequence: The horizontal motion begins, block signals are generated to simulate a train of cars, and each label's presence was read from a wheel sensor signal initiated by an optical pick-off at the edge of the label mounting plates. The scanner teletype outputs (representing its identification of the labels) are monitored by the microcomputer and the label read or non-read status was output to the printer and cassette tape. A sample printout is shown in Figure 39; the

```
* RUN #768-761 1100 15- JULY-77 SCANNER #2
* SPEED=3 DIST=MEDIAN HGT=MEDIAN
*STANDARD SCANNER

                                                                      1
   1    8103079091-9    NO LABEL        43                            2
   2    7103346002-0    NO LABEL        44
                        NO LABEL                                      3
   3    0022042514-1    1573198699?5    45                            4
   4    0308375308-5    NO LABEL        46                            5
   5    0550133489-0    04333173437 0   47
                        NO LABEL                                      6
   6    0713008023-6    0103346057-5    48                            7
   7    0103639079-0    NO LABEL        49
                        NO LABEL                                      8
   8    0308516649-3    NO LABEL        50                            9
   9    0028111654-1    NO LABEL        51                            0
  10    0123456789-*    0123456789-*
                        NO LABEL
                        NO LABEL
                        NO LABEL
                        END
```

FIGURE 39. SAMPLE TEST FACILITY PRINTOUT

true label number appears in the left-hand column, while the actual value read is on the right.

Speeds up to five miles per hour were obtained from the chain-driven carrier. The freight car wheel sensor signals and speeds higher than 5 miles per hour were simulated. Off-line data analysis, comparing the scanner read values with the actual label identification, was performed using a time-shared computer facility.

4.2 Test Methodology

The OACI system is an ensemble of four individual systems, each of which contribute to OACI system performance. These four systems are:

1. Labels
2. Scanner System
3. Wheel Sensor
4. Block Sensor

The wheel sensor and block sensor systems are functionally quite simple and if they do their job, then overall OACI quality depends on two factors:

1. Quality of Label Population
2. Performance of Scanner System

This report deals primarily with the Scanner System. Its performance cannot be dealt with, however, without considering the quality of the label population and the joint impact of these two factors on OACI.

In the final analysis, the measure of effectiveness of the OACI system from the railroad's point of view is the ability of the system in its wayside environment to correctly read an acceptable percentage of car labels. In the next section, the question of relating laboratory test results to this effectiveness measure is addressed.

4.2.1 Laboratory Test Significance

The baseline for measuring the scanner hardware improvements was obtained by using current model OACI scanners which were calibrated and tested by the manufacturer to meet current production scanner performance criteria. Modified scanners were directly compared to these baseline scanners under laboratory conditions to simulate the key aspects of the field conditions.

In order to relate laboratory test results to OACI effectiveness, it is necessary to first introduce several key concepts. These are:

1. Individual Label Readability
2. Label Population Readability Distribution
3. Scanner System Capability (as a function of Label Readability)
4. Relationship of Field Label Population to Laboratory Label Population

These concepts are discussed in the next sections.

4.2.1.1 Individual Label Readability Index

There are many ways in which the individual label Readability Index (R) can be defined. Before choosing a definition, several criteria that the definition should satisfy can be identified:

1. For a new label, $R = 1$
2. For a blank label, $R = 0$
3. Readability should be measurable

To satisfy the measurability criteria, the Readability Index is defined as a function of measurable voltage levels at the output of the red and blue photomultipliers for the existing scanner head. Clearly, this definition depends on the linearity of the existing scanner head and on the balance of the red and blue channel gains. The way the measure is constructed, however, it is independent of the actual gain value.

We are now ready to define the Readability Index, R, as:

$$R = K\,[\,1-\exp(-FM/V_0)\,] \tag{1}$$

where

K is chosen such that R(New Label) = 1

FM is the label Figure of Merit and is a function of measurable voltage levels

V_0 is red (or blue) channel voltage level for a new label.

Note that if FM is defined such that FM(Blank Label)=0, then from equation 1, it is seen that R(Blank Label)=0. Thus, criterion 2 is satisfied. Next choose K to be

$$K = [\,1-\exp(-FM(\text{New Label})/V_0\,]^{-1} \tag{2}$$

With this choice of K, criterion 1 is also satisfied.

Criterion 3 is satisfied if the label Figure of Merit is defined in terms of the voltage peaks that occur in the red and blue channel photomultiplier output signals where a red or a blue stripe, respectively, is scanned. Let

$$FM = \frac{V_{R,avg} + V_{B,avg}}{\frac{V_{R,largest}}{V_{R,smallest}} + \frac{V_{B,largest}}{V_{B,smallest}}} \qquad (3)$$

where

$V_{R,avg}$ is the average of the red channel red or white stripe voltage peaks

$V_{R,largest}$ is the largest of the red or white stripe voltage peaks

$V_{R,smallest}$ is the smallest of the red channel red or white stripe voltage peaks

and the blue channel voltages are similarly defined.

The Figure of Merit (FM) was developed because the visual method of ranking unreadable labels was unreliable. The development proceeded from the following experimental evidence:

1. At a fixed distance from the scanner head, a label's signal return at the central detector (standardizer) of the scanner did not vary significantly from one scanner the scanner to the other and over extended periods of time.
2. The detector will read all 13 digits of a label as long as every module return is above a voltage threshold and no modules have returns much larger than those of adjacent modules. This latter constraint is imposed by

reflections in the standardizer delay line which interfere with the detection of the small signal returns from weaker modules.

3. A successful read of a label requires the detection of all digits in both the blue and red channels of the scanner. Figure 40 shows the red and blue outputs for a new label at the close and distant scanner ranges.

The Readability Index measurement process can be summarized as follows:

1. Measure the photomultiplier voltage peaks that occur at the appropriate stripes on a New Label.
2. Calculate FM (New Label) using equation 3.
3. Calculate the K factor (new label normalization factor) using equation 2.
4. Measure photomultiplier voltages for test label and compute FM using equation 3.
5. Calculate Readability using equation 1.

4.2.1.2 Cumulative Field Readability Distribution

The actual field readability distribution of the entire label population could only be known by measuring the readability of each label as described in the preceding section. This distribution could be approximated quite well, however, by measuring the readability of a much smaller, statistically valid sample. Figure 41 is a hypothetical plot of a very useful

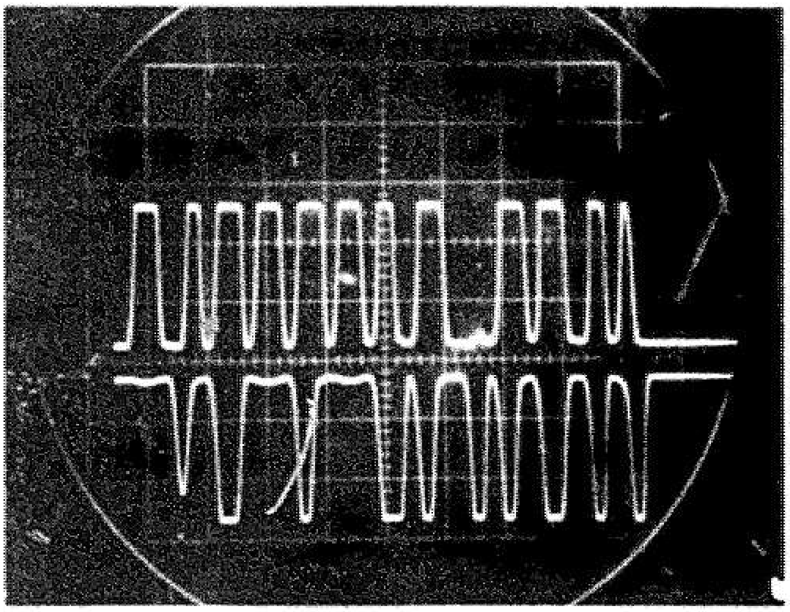

NEW LABEL AT CLOSE SCANNING RANGE

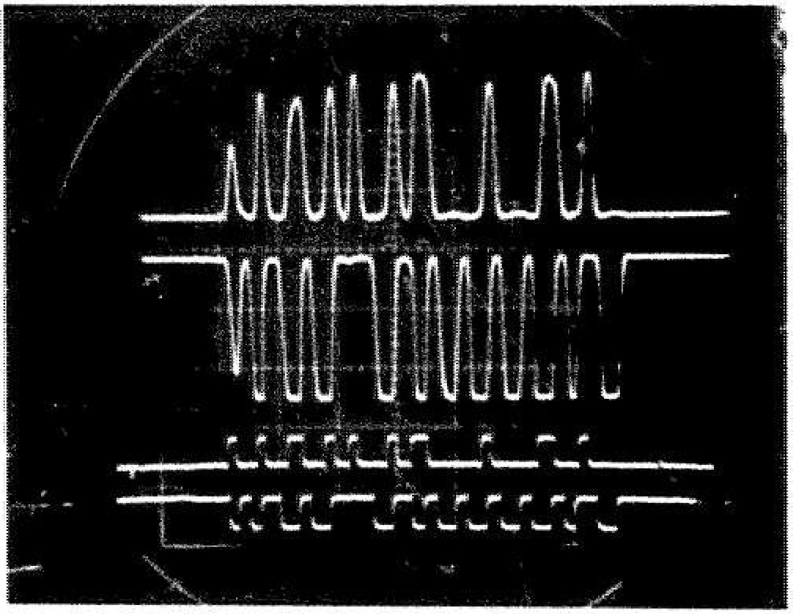

NEW LABEL AT DISTANT SCANNING RANGE

FIGURE 40. LABEL PHOTOGRAPHS OF ANALOG PM DATA

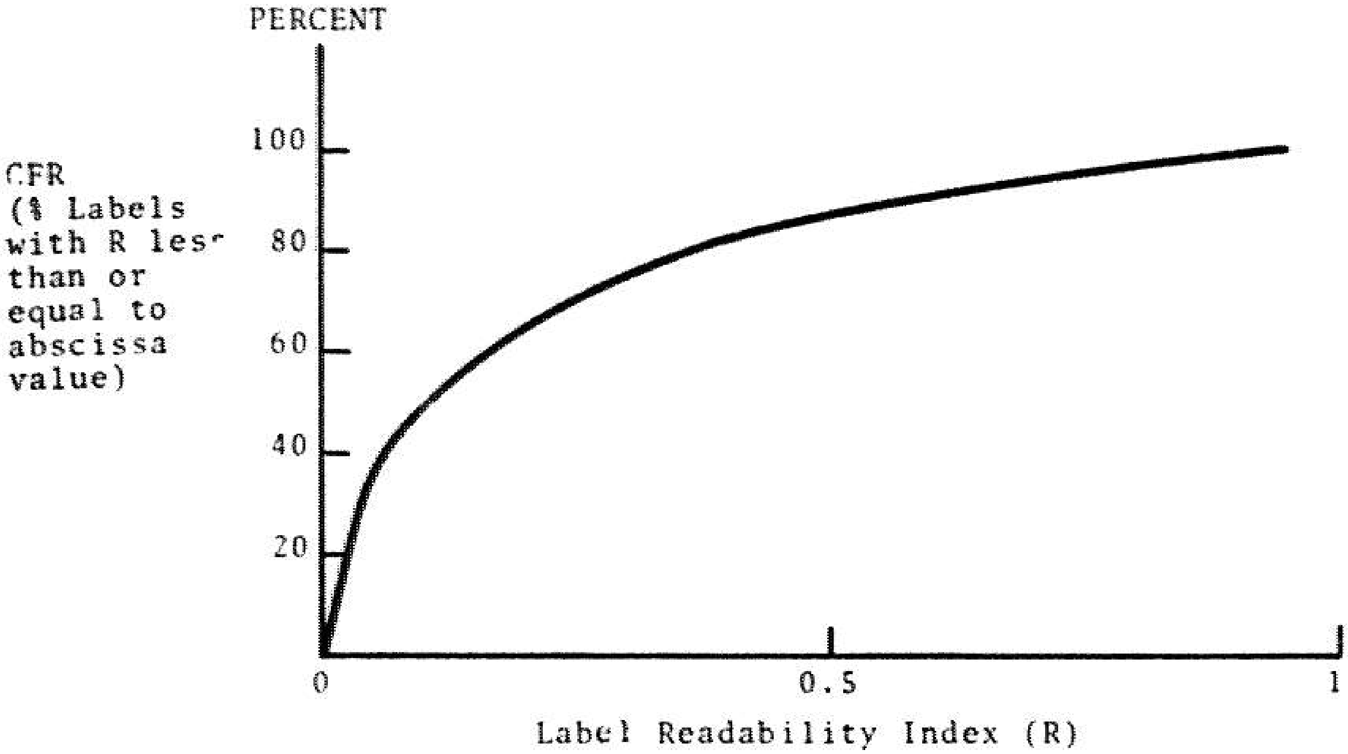

FIGURE 41. HYPOTHETICAL CUMULATIVE FIELD READABILITY DISTRIBUTION

measure of label population readability, the Cumulative Field Readability CFR vs individual Label Readability Index (R).

4.2.1.3 Scanner Percentage System Read Capability

It has been observed, both for the existing scanner system and the modified experimental system that, in general, a label Figure of Merit can be found for each system which shall be called the system's Critical Figure of Merit (CFM) such that:

1. The system can read correctly most labels with FM>CFM.
2. The system cannot read correctly most labels with FM<CFM.

Now, using FM=CFM for the particular system under consideration, evaluate the associated Readability Index using equation 1. This value of R will be referred to as the system Lower Limit, L. Thus,

$$L = K[1-\exp(-(CFM/V_0)] \qquad (4)$$

where K and V_0 depend only on new label characteristics and are evaluated as described in the previous section. This value can be now plotted on the label population readability distribution graph to find the percentage of labels that the system can read. This is illustrated in Figure 42 for two lower limit values L(A) and L(B) which are the system Lower Limits for Scanner System A and B, respectively. Note that as plotted in this sample, L(A) is less than L(B). Accordingly, Scanner System A has a greater read capability than Scanner System B since as shown on the vertical axis, there is a smaller percentage of the label

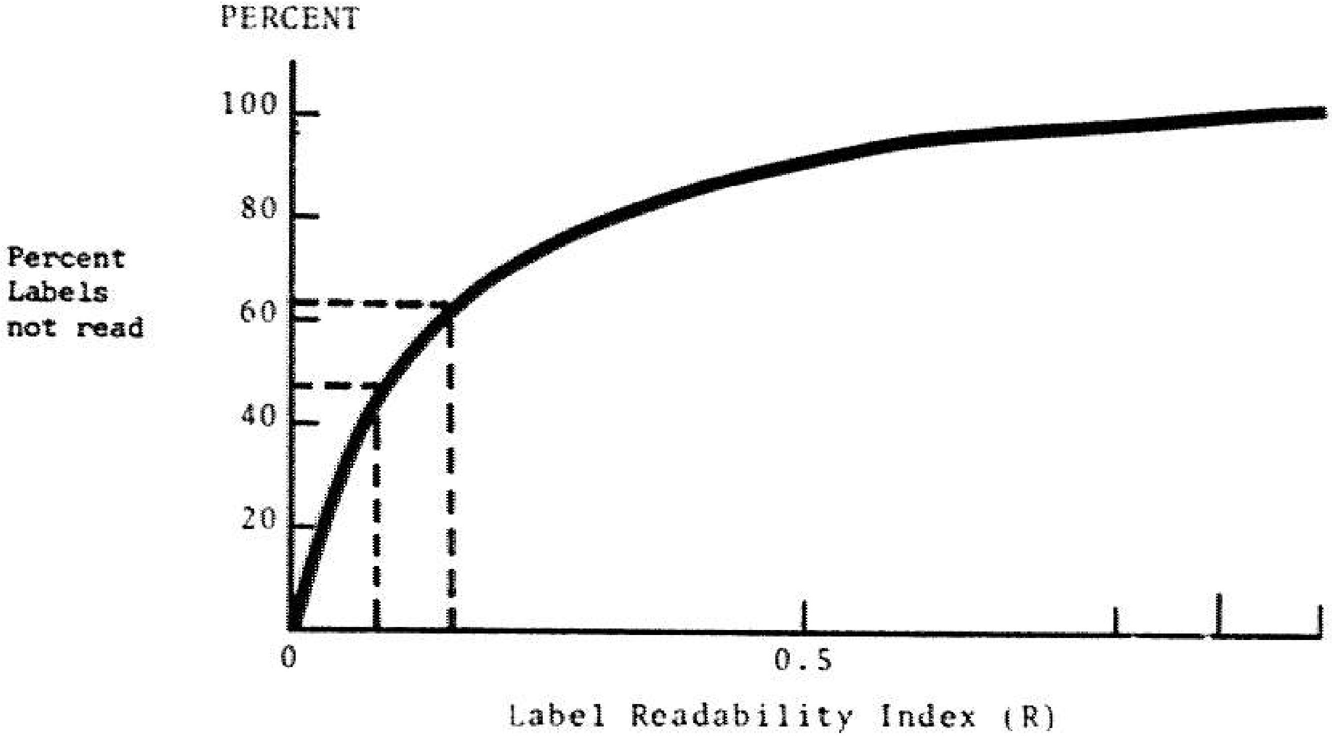

FIGURE 42. SAMPLE SYSTEM CAPABILITY PLOT

population that cannot be read by Scanner System A as compared with those that cannot be read by Scanner System B.

For the discussion which follows, the Scanner System Percentage Read Capability, PRC, is defined as:

$$PRC = 1 - L \tag{5}$$

4.2.1.4 Relationship to Laboratory Label Population

The important observation can now be made that the wayside capability of any Scanner System to correctly read labels can be evaluated in the laboratory if the following two primary conditions are met:

1. A set of labels is available for evaluation purposes adequately covering the entire range of label readability from new labels to labels so degraded as to be, for practical purposes, blank.
2. A graph of the Cumulative Field Readability (CFR) function can be constructed that is in acceptably close agreement with the actual label population's CFR.

(The environmental effects of rain, snow, etc., are not considered in the above conditions.) The laboratory determination of the percentage of actual labels that a system under test can read is a two-step process. First, the Capability, C, of the system under test is calculated using the lowest Figure of Merit (the CFM) of all the labels the test system can read. Then C is plotted on the CFR graph and the percentage of labels read is taken from the vertical axis. To compare this against the Capability of the existing scanner system, the percent change in population readability of the test scanner system is evaluated relative to the existing scanner system.

4.2.1.5 Observation

It is important to recognize that the Cumulative Field Readability function for the actual label population changes with time since the readability of each label tends to degrade as it is exposed to the wayside environment. Conversely, new label replacements or label washing can enhance readability. Label enhancement was not investigated in this study.

4.2.1.6 Test Label Population Selection

A test label population of 54 labels was carefully selected* from 129 degraded labels supplied by the railroads. The selection process involved the identification of the non-read and marginal read labels and of the percent of non-read error causes (damage, dirt, bent backing plate, etc.) with the distribution of error causes in the field¹. An analysis did not reveal any dependence of the error causes on car type (box car, hopper, etc.). Thus, the tests were performed at a fixed distance which was representative of the car types in the national fleet. Representative speeds were also obtained from field data.*

4.3 Pretest Setup

The next essential step was to establish a functional relationship between the Figure of Merit and changes in the Percent Read Capability of the scanners. Three inferences were drawn to estimate this function. The first two were end points which related 100% and 0% scanner readabilities to the very highest and lowest values of the Figures of Merit (respectively, the very best and worst labels). The third inference yielded a data point based on a comparison of actual reads of the 54 labels to their FM values. Drawing on the 1975 experience reported by railroad personnel, it was found that the manufacturer's original scanner could read labels when the FM was greater than 0.17. This value could coincidentally be matched to the 83% Cumulative Field Readability at that time.

These observations led to the experimental conclusion that the Percentage Read Capability for the present scanner is

$$PRC = (1 - CFM) \times 100 \tag{6}$$

where CFM is the Critical FM for the present scanner.

It is intuitively obvious that the Cumulative Field Readability function can be represented, for small changes in FM, as a linear function of FM. This can be formally verified if it is assumed that the CFR function is smooth about the point of linearization. It is important here to emphasize that in the test, this observation is not used to specify absolute readability values. Rather, it was used to estimate readability changes from the current known field readability of 83%. The following approximate relationship is employed

$$\text{Change in PRC} = -\text{Change in CFM} \qquad (7)$$

Figure 43 is a sample test computer output showing the Figure of Merit for the 54 selected test labels. Other information is provided about the condition of the labels, the photomultiplier signal levels, and the label identifications. The test results are used to derive a difference of Critical Figures of Merit values between the two systems for use in equation 7. The difference was obtained by subtracting the CFM of the manufacturer's scanner from the CFM of the modified scanner.

The tests were conducted as follows:

1. At least four test runs were made with all labels moving past both scanners at five miles per hour and at median range (10.1 feet).
2. The tests were repeated at 30 miles per hour and at close (9 feet) and distant (12 feet) ranges.
3. All twelve digits and the parity digit had to agree with the actual label values before a read was declared.

Upon completion of the test runs, the average difference in CFM between the labels read by the modified scanner and the

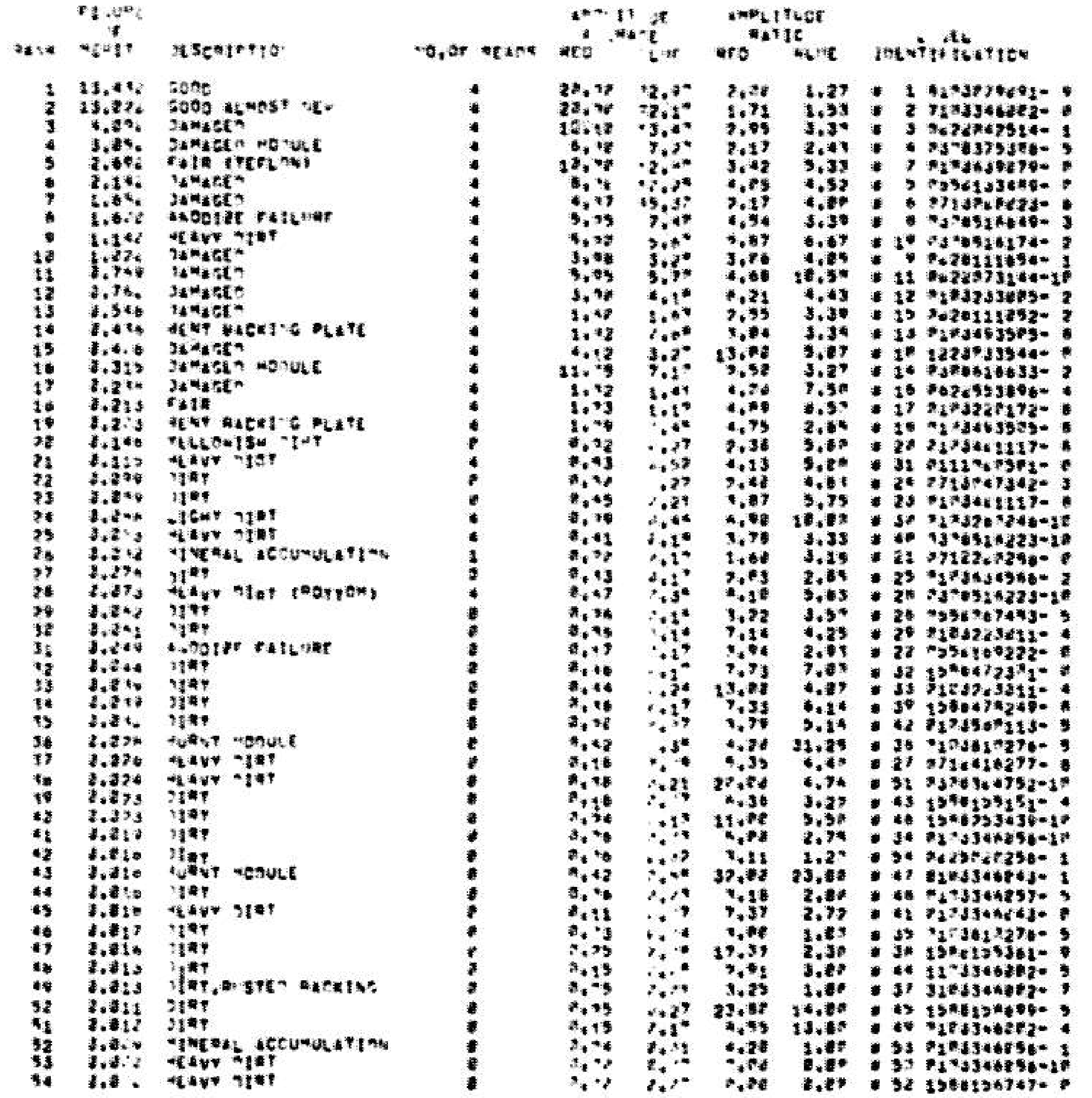

FIGURE 43. FIGURE OF MERIT COMPUTER OUTPUT

manufacturer's scanner was calculated. This difference was then used to estimate the percent readability increase.

Prior to the test, the Figure of Merit was measured for each label in the test population. Figure 43 shows a sample computer printout from the measurement process.

The labels were than each assigned a number (rank) according to their Figure of Merit with the label with the highest Figure of Merit being assigned Rank 1 and so on. Figure 44 is a compilation of test labels by number (rank) with a notation for each label indicating the probable cause of label degradation.

4.4 Test Results

Four attempts were made to read each test label with both the modified and the present scanner system. The results of the test are shown in Table 14.

FIGURE OF MERIT RANK ORDER	LABEL ERROR CAUSE	FM MEDIAN FIELD	NUMBER OF READS (4 MAX.)
1	Good	17.93	4
2	Good-Almost New	17.18	4
3	Damaged	4.23	4
4	Fair (Teflon)	3.65	4
5	Damaged Module	3.27	4
6	Damaged	2.78	4
7	Damaged	1.936	4
8	Anodize Failure	1.82	4
9	Damaged	1.73	4
10	Heavy Dirt	1.36	4
11	Damaged	1.23	4
12	Damaged	0.986	4
13	Damaged	0.807	4
14	Damaged	0.734	4
15	Bent Backing Plate	0.647	4
16	Damaged Modules	0.514	4
17	Damaged	0.343	4
18	Fair	0.312	4
19	Yellowish Dirt	0.239	4
20	Bent Backing Plate	0.202	4
21	Dirt	0.175	4
22	Dirt	0.155	4
23	Mineral Accumulation	0.149	4
24	Heavy Dirt	0.149	4
25	Heavy Dirt	0.149	4
26	Dirt	0.145	4
27	Light Dirt	0.138	4
28	Heavy Dirt (BOTTOM)	0.105	4
29	Dirt	0.095	4
30	Dirt	0.085	4
31	Dirt	0.0747	0
32	Burnt Module	0.0737	0
33	Dirt	0.070	0
34	Dirt	0.062	0
35	Heavy Dirt	0.056	0
36	Dirt	0.054	0
37	Dirt	0.048	0
38	Anodize Failure	0.040	2
39	Dirt	0.037	0
40	Dirt	0.034	0
41	Heavy Dirt	0.032	2
42	Dirt	0.028	0
43	Dirt	0.026	0
44	Dirt	0.025	0
45	Dirt	0.0205	0
46	Dirt	0.020	0
47	Heavy Dirt	0.019	0
48	Dirt, Rusted Backing	0.017	0
49	Heavy Dirt	0.015	0
50	Dirt	0.013	3
51	Burnt Modules	0.012	0
52	Dirt	0.011	0
53	Mineral Accumulation	0.008	0
54	Heavy Dirt	0.007	0

FIGURE 44. FIGURE OF MERIT RANK ORDER

TABLE 14. SCANNER TEST RESULTS

Label	Present Scanner				Modified Scanner			
	Run No.				Run No.			
No.	1	2	3	4	1	2	3	4
1-19	G	G	G	G	G	G	G	G
20	G	G	E	E	G	P	G	G
21	G	G	G	G	G	G	G	G
22	-	-	-	-	G	G	G	G
23	G	G	G	G	G	G	G	G
24	G	G	G	G	G	G	G	G
25	G	G	G	G	G	G	G	G
26	G	G	G	G	G	G	G	G
27	-	E	-	-	G	G	G	G
28	G	G	G	G	G	G	G	G
29	-	-	-	-	G	G	G	G
30	G	G	G	G	G	G	G	G
31	G	G	G	G	G	G	G	G
32	E	E	E	E	G	G	G	G
33	-	-	-	-	G	G	G	G
34	-	-	-	-	-	-	-	-
35	-	-	-	-	-	-	-	-
36	-	-	-	-	-	-	P	-
37	-	-	-	-	G	G	G	G
38	-	-	-	-	G	G	G	G
39	-	-	-	-	G	G	G	G
40	G	G	G	G	G	G	G	G
41	-	-	-	-	-	-	-	-
42	-	-	-	-	-	-	G	G
43	-	-	-	-	G	G	G	G
44	-	-	-	-	-	-	-	-
45	-	-	-	-	G	G	G	G
46	-	-	-	-	G	G	G	G
47	-	-	-	-	-	-	-	-
48	-	-	-	-	G	G	G	G
49-53	-	-	-	-	-	-	-	-
54	-	-	-	-	-	-	-	P

Legend: G = Good Read
P = Partial Read
- = No Read
E = Present Scanner Read but Parity Error

The readability increase observed using the modified scanner over the manufacturer's present scanner is derived from considering the number of labels in the test population correctly read by each scanner. (The method of test evaluation used here and in the results in Appendix II is one of several reasonable approaches to scanner evaluation. Other methods are discussed briefly later in this section.)

From the sample results shown in Table 14, the following results summary can be derived.

	Present Scanner		Modified Scanner
Number Labels Read	28		40
Corresponding FM	0.095		0.032
Readability Value	90.5%		96.8%
Readability Improvement		6.3%	

The "corresponding FM" is obtained by entering Figure 44 with 28 and 50 in the Figure of Merit Rank Order column and extracting the FM (Median Field) value. The readability value is obtained as

$$\text{Readability Value } (\%) = (1-\text{FM}) \times 100$$

The improvement is, of course, the difference in readability value.

From Table XIV, it can also be observed that several other Percentage Read Capability, or readability, difference comparisons can be made.

- Readability Difference at First "No-Reads"
- Readability Difference after Last 2 Consecutive Good-Reads
- Readability Difference after N No-Reads

The Percentage Read Capability Differences are computed using equation 7.

Using the No-Read and Good-Read data in Table XIV to derive a label number and then using Figure 44 to obtain Figure of Merit, the following Readability Improvements are determined:

At First No-Read

FM (Present) = 0.155
FM (Experimental) = 0.062

Readability Improvement = 9.3%

At Second No-Read

FM (Present) = 0.145
FM (Experimental) = 0.062

Readability Improvement = 8.3%

After Last 2 Consecutive Good-Reads

FM (Present) = 0.075
FM (Experimental) = 0.034

Readability Improvement = 4.1%

Further test results are presented in Appendix II. A field comparison of the two systems is, of course, the only conclusive way to demonstrate readability improvement. The laboratory tests cited here do, however, indicate a readability improvement potential in the range of from 4% to 9%.

4.5 Concluding Remarks

The history of OACI scanner development is traced in Figure 45. The laboratory tests compared the read capabilities of Scanner 2 and Scanner 10.

The test results presented in Section 4.4 and in Appendix II show that there is a definite potential for OACI improvement. This improvement potential is estimated at from 4% to 9% over the capabilities of the present scanner system (Scanner 2 in Figure 45). These improvements are achieved through the use of recent technology advances and through the insight derived from operational experience with the present scanner system.

It is observed that the Figure of Merit (which can be automatically calculated for each label as it is scanned) could be used as a field indication of label quality. Thus, labels that need maintenance (e.g., washing) could readily be identified. A minimal maintenance program, coupled with the advances achieved in label identification (as reported herein), could result in a highly satisfactory operational OACI capability for the nation's railroads.

SCANNER MODIFICATIONS

SCANNER #1	SCANNER #2	SCANNER #4	SCANNER #5	SCANNER #5^1	SCANNER #6	SCANNER #7	SCANNER #8	SCANNER #9	SCANNER #10
MANUFACTURERS OLD STYLE STANDARD SCANNER	MANUFACTURERS LATEST MOD STANDARD SCANNER	MODIFIED OPTICS NEW LINE DRIVER STANDARD STANDARDIZER	2nd MODIFICATION OPTICS NEW LINE DRIVER STANDARD STANDARDIZER	3rd MODIFICATION OPTICS NEW LINE DRIVER STANDARD STANDARDIZER	4th OPTICS MODIFICATION NEW LINE DRIVER IC STANDARDIZER WITH OLD DELAY LINE	4th OPTICS MODIFICATION NEW LINE DRIVER IC STANDARDIZER NEW DELAY LINE MOD I	4th OPTICS MODIFICATION NEW LINE DRIVER IC STANDARDIZER NEW DELAY LINE MOD II	5th OPTICS MODIFICATION NEW LINE DRIVER IC STANDARDIZER NEW DELAY LINE MOD II	6th OPTICS MODIFICATION NEW LINE DRIVER IC STANDARDIZER NEW DELAY LINE MOD II MICROPROCESSOR BASED ELECTRONICS

1st OPTICS MODIFICATION - NEW BLUE - RED PHOTOMULTIPLIERS
NEW ARC SOURCE - BEAM SPLITTER
NEW OPTICAL LAYOUT EXTERNAL PMT PWR SUPPLY

2nd OPTICS MODIFICATION - ALL OF 1st PLUS NEW SPIN CUBE

3rd OPTICS MODIFICATION - ALL OF 2nd PLUS CHECKERBOARD BEAMSPLITTER
NOT FILTER IN BOTH CHANNELS NEW SLIT

4th OPTICS MODIFICATION - ALL OF THIRD EXCEPT OLD PHOTOMULTIPLIER
REPLACED IN BLUE CHANNEL, NOT FILTER IN
RED CHANNEL ONLY

5th OPTICS MODIFICATION - ALL OF FOURTH EXCEPT EXTERNAL POWER SUPPLY
REPLACED WITH MANUFACTURERS ORIGINAL

6th Optics Modification - ALL OF THE FIFTH OPTICS
PLUS INTERNAL STABILIZED
SYCHRONIZATION SUBSYSTEM

FIGURE 45. SCANNER MODIFICATIONS

APPENDIX A

SCANNER SYSTEM

A.1 ELECTRONIC SCHEMATIC DIAGRAMS

A.1.1 CCD Label Decoder A-3/A-4

A.1.2 Start/Stop Detector Board A-5/A-6

A.1.3 Post Detection Processor Auxiliary Board A-7/A-8

A.1.4 Buffer Register A-9/A-10

A.1.5 Gate Generator-A A-11/A-12

A.1.6 IMP Detector Board A-13/A-14

A.1.7 Label Locator Display Board A-15/A-16

A.1.8 Display Buffer A-17/A-18

A.1.9 Power Distribution, Grounding and Interconnection A-19/A-20

A.1.10 Label Location Calculator A-21/A-22

A.1.11 Adaptive Threshold Color Channel A-23/A-24

A.1.12 Label Recognition Logic A-25/A-26

A.1.13 Gate Generator-B A-27/A-28

A.1.14 DOT-CCD Label Decoder A A-29/A-30

A.1.15 CCD Decoder-Timing Generator A-31/A-32

A.1.16 IMP Corrector Board A-33/A-34

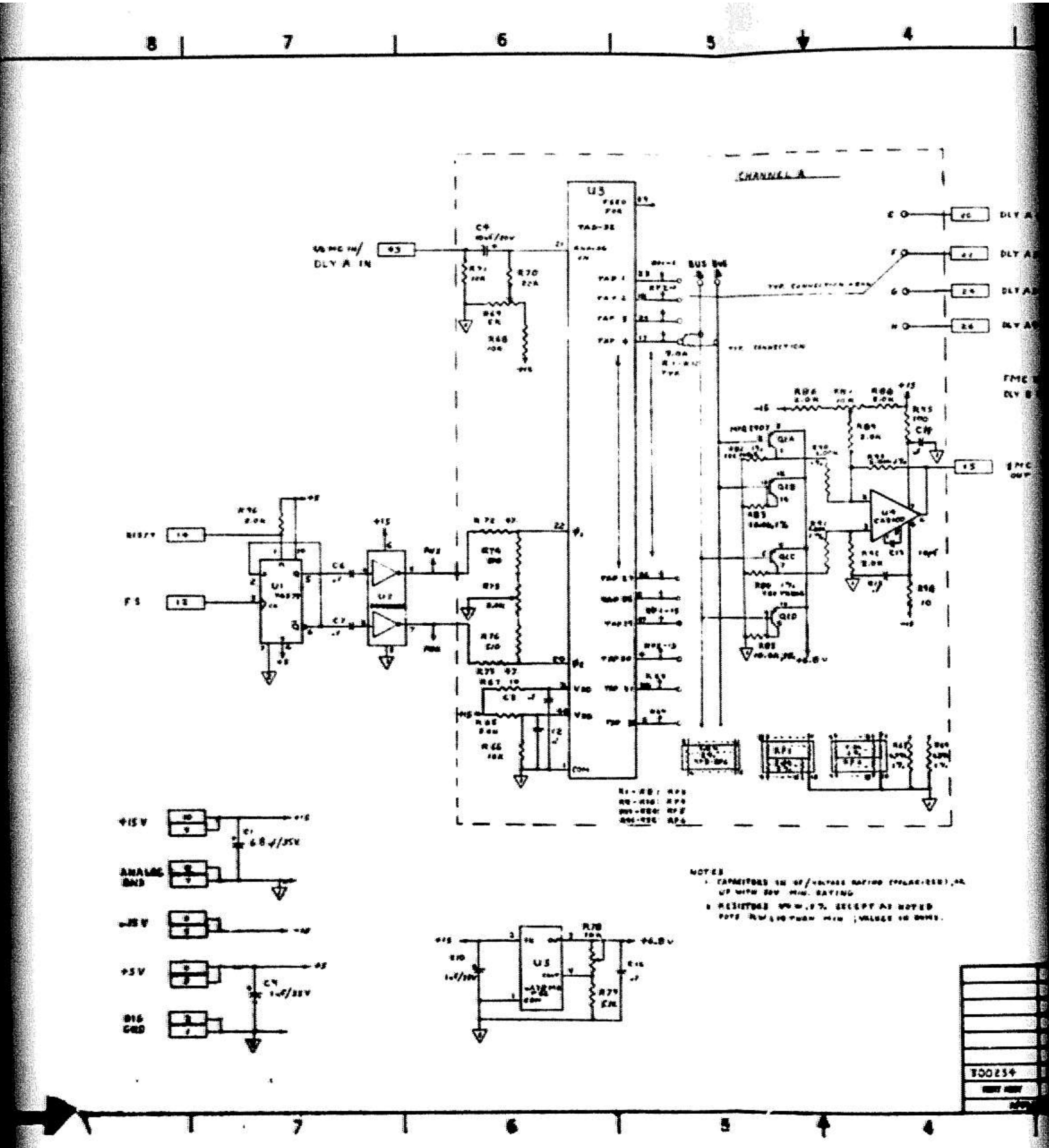
8
7
6
5
4
CHANNEL A
U3
TAD-32
ANALOG IN
DLY A IN
C4
R70
22K
R69
5K
R68
10K
TAP 1
TAP 2
TAP 3
TAP 4
TAP 29
TAP 30
TAP 31
TAP 32
BUS
DLY A
U1
U2
U4
Q1A
Q1B
Q1C
Q1D
R72
R73
R74
R75
R76
R67
R65
R66
C3
C2
+15V
ANALOG GND
-15V
+5V
DIG GND
C1
6.8uF/35V
U5
R78
10K
R79
5K
+6.8V
NOTES
300254

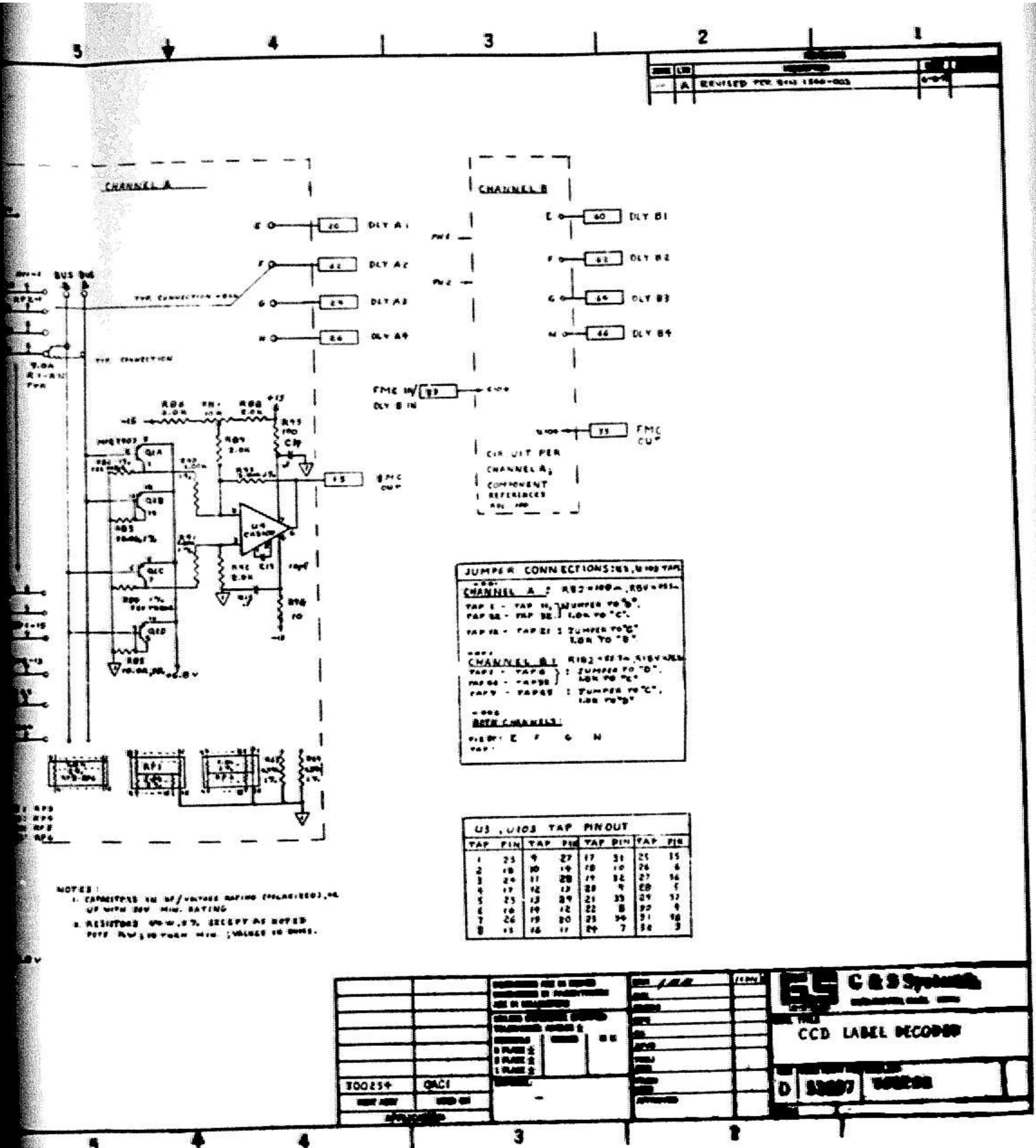

U3 ,U103 TAP PINOUT							
TAP	PIN	TAP	PIN	TAP	PIN	TAP	PIN
1	23	9	27	17	31	25	35
2	18	10	14	18	10	26	6
3	24	11	28	19	32	27	36
4	17	12	13	20	9	28	5
5	25	13	29	21	33	29	37
6	16	14	12	22	8	30	4
7	26	15	30	23	34	31	38
8	15	16	11	24	7	32	3

NOTES:
1. CAPACITORS IN uF/VOLTAGE RATING (POLARIZED),OR uF WITH 20V MIN. RATING
2. RESISTORS 1/4W,5% EXCEPT AS NOTED POTS [illegible] W;10-TURN MIN.;VALUES IN OHMS.

A.1.1 CCD Label Decoder

NOTES
1. DENOTES OUT PUT PINS ☐
2. DENOTES BOARD LOCATION ( )
3. [illegible] A18

DEVICE	REF. DES.	+5V	GND
[illegible]	U1, U35	14	7
[illegible]	U3, U8, U18, U21, U31	16	8
[illegible]	[illegible]	16	8
[illegible]	U6, U26, U?6, U30, U34	14	7
[illegible]	U7, U?, U29	14	7
[illegible]	U11, U24	14	7
[illegible]	U13, U17	14	7
[illegible]	U15, U27	14	7
[illegible]	U14, U16, U?, U28, U33	14	7
[illegible]	RP1, RP2	16	—
[illegible]	SW1, SW2	—	16
[illegible]	U32	16	8

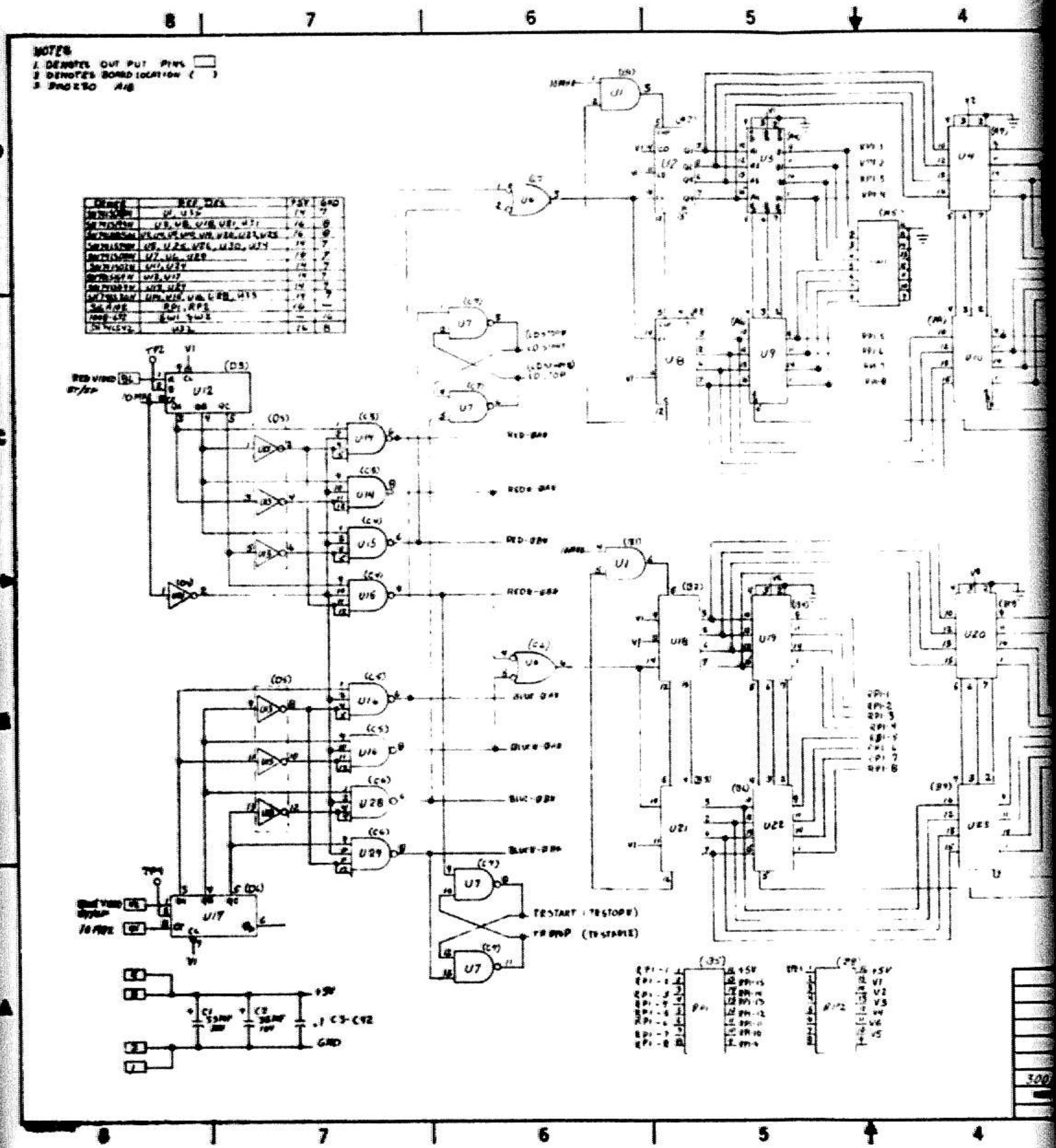

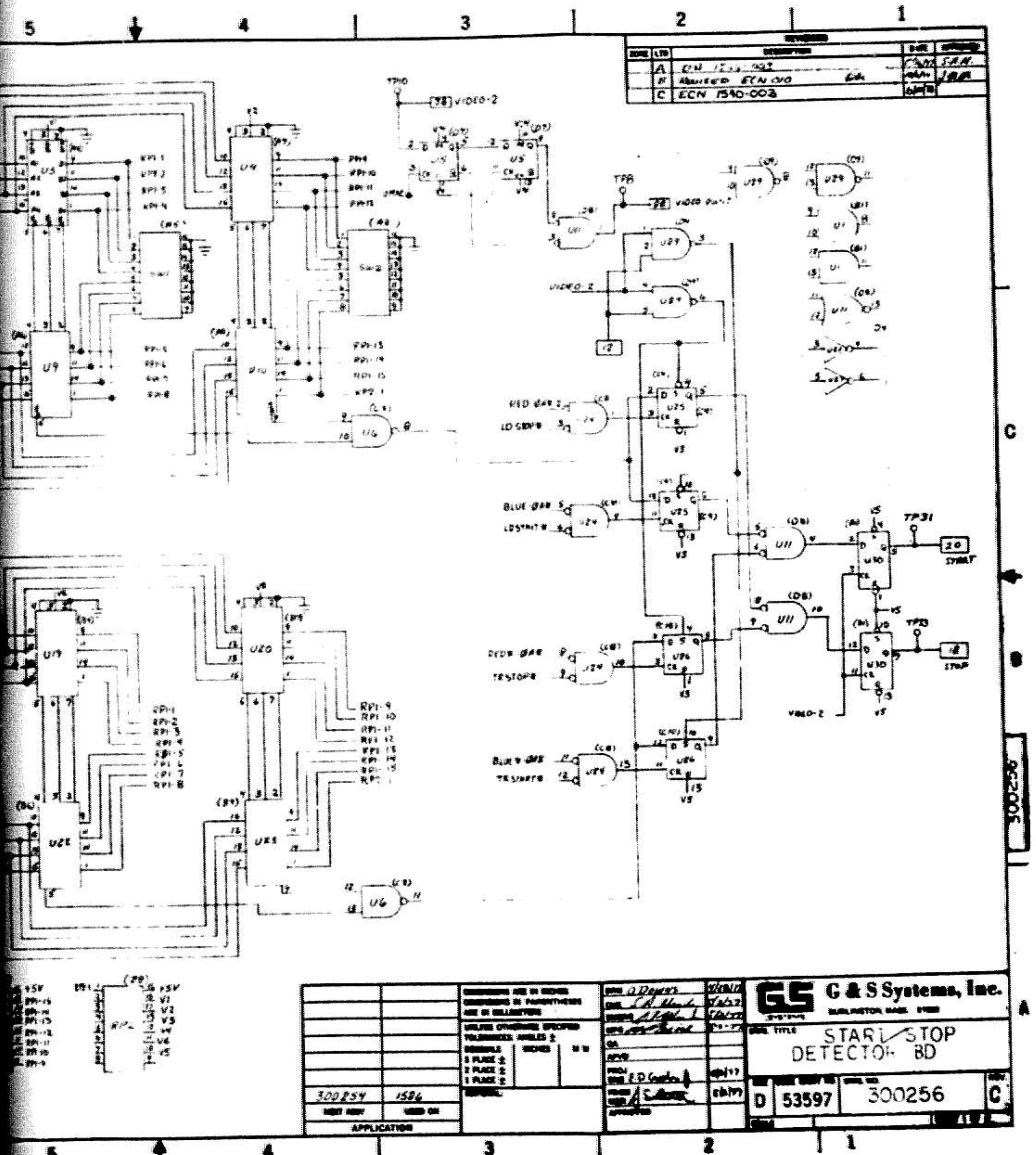

A.1.2 Start/Stop Detector Board

LABEL LOCATOR TEST CIRCUIT

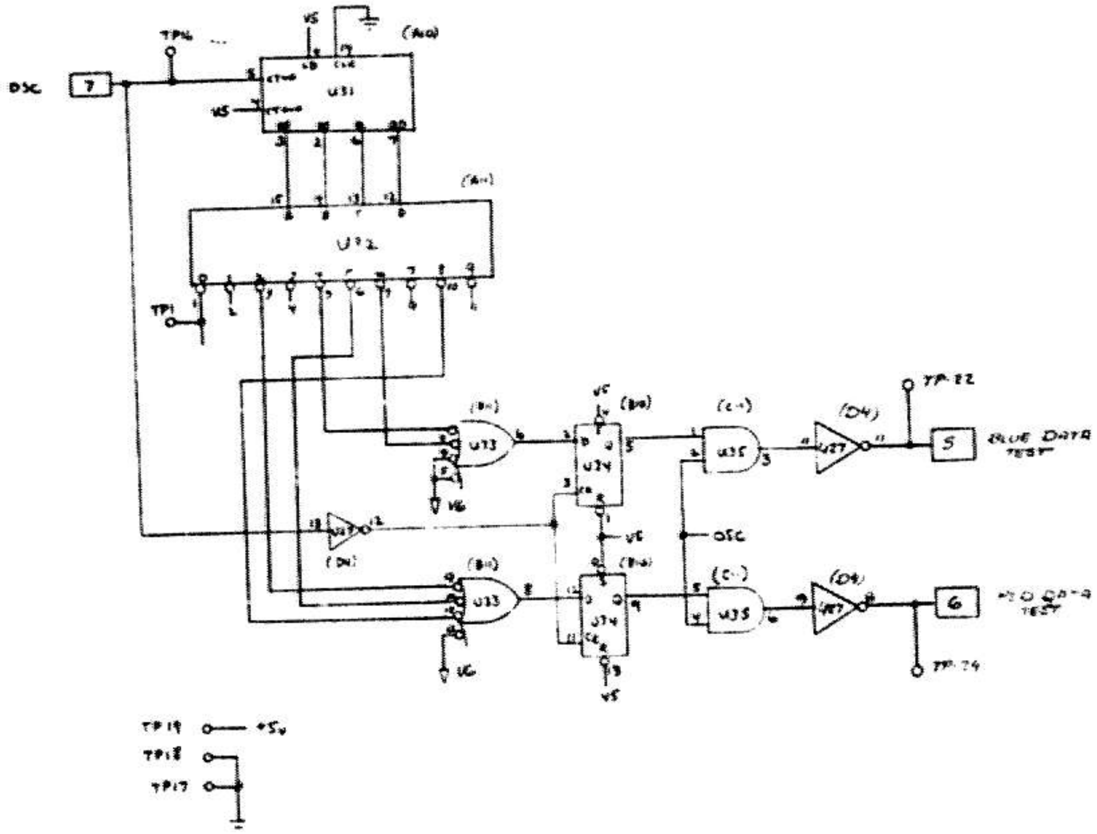

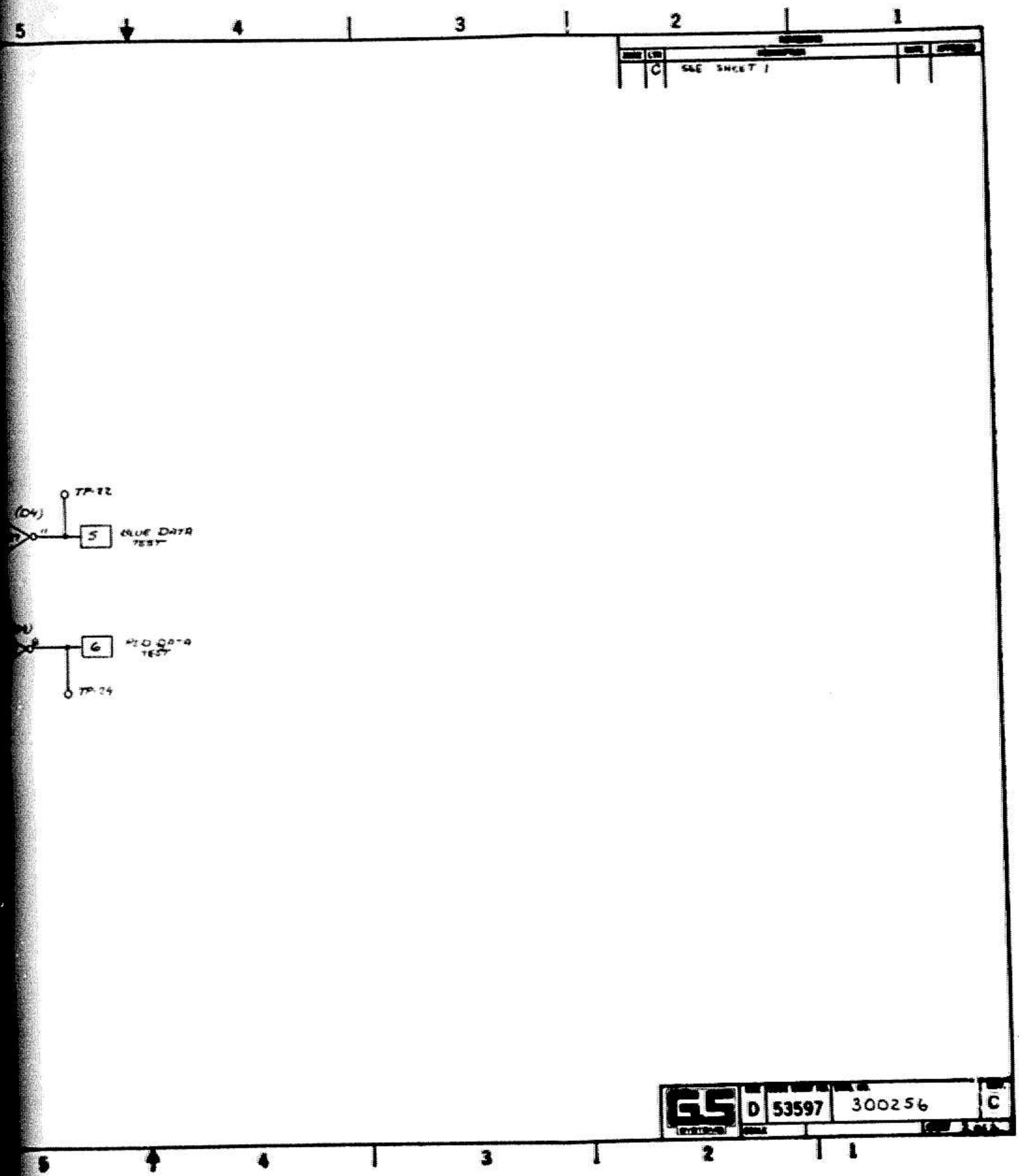

A.1.2 Start/Stop Detector Board

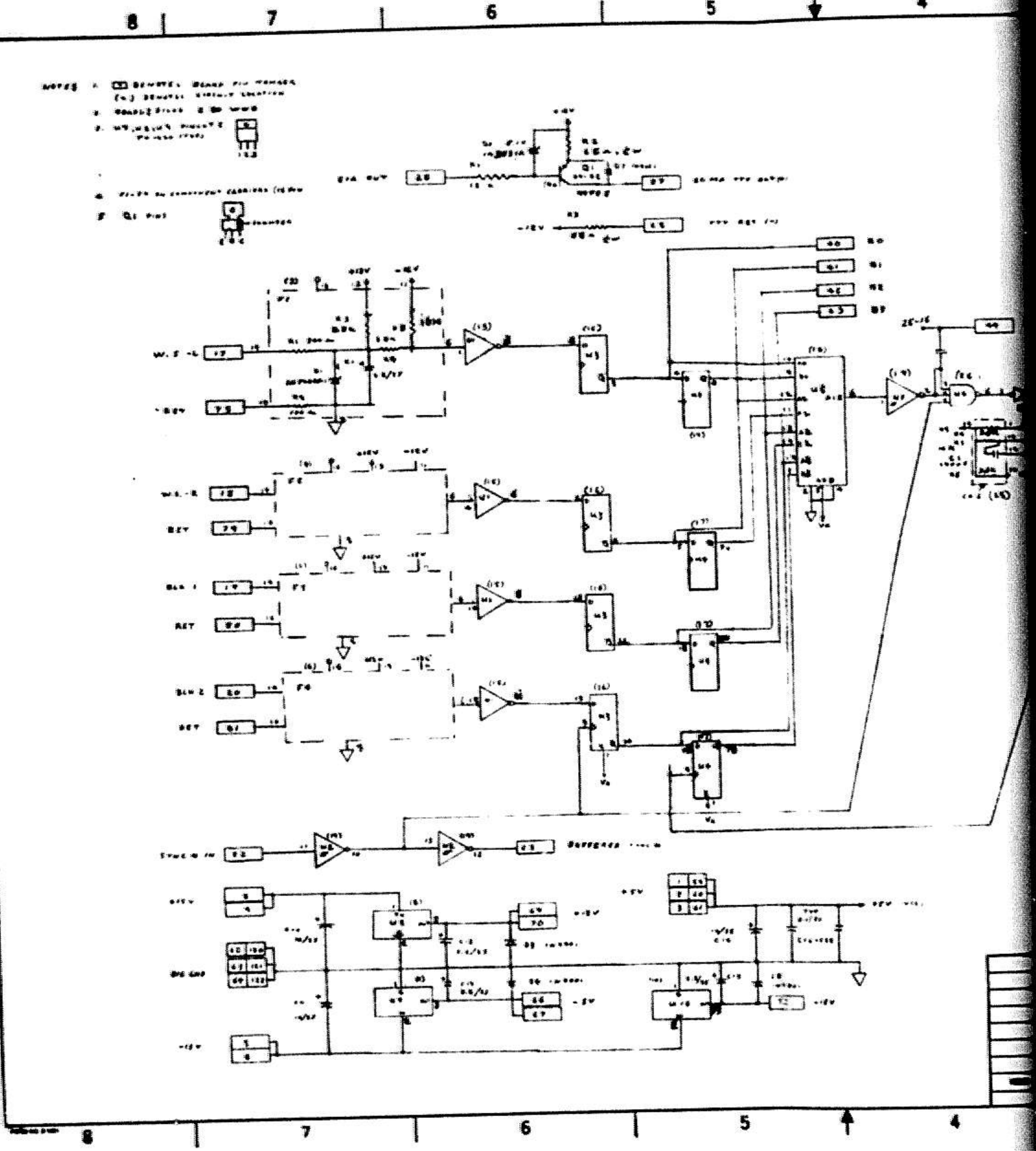
8
7
6
5
4
U5
U4
U3
U8
U7
U6
F1
F2
F3
F4
Q1
40
41
42
43
44
8
7
6
5
4

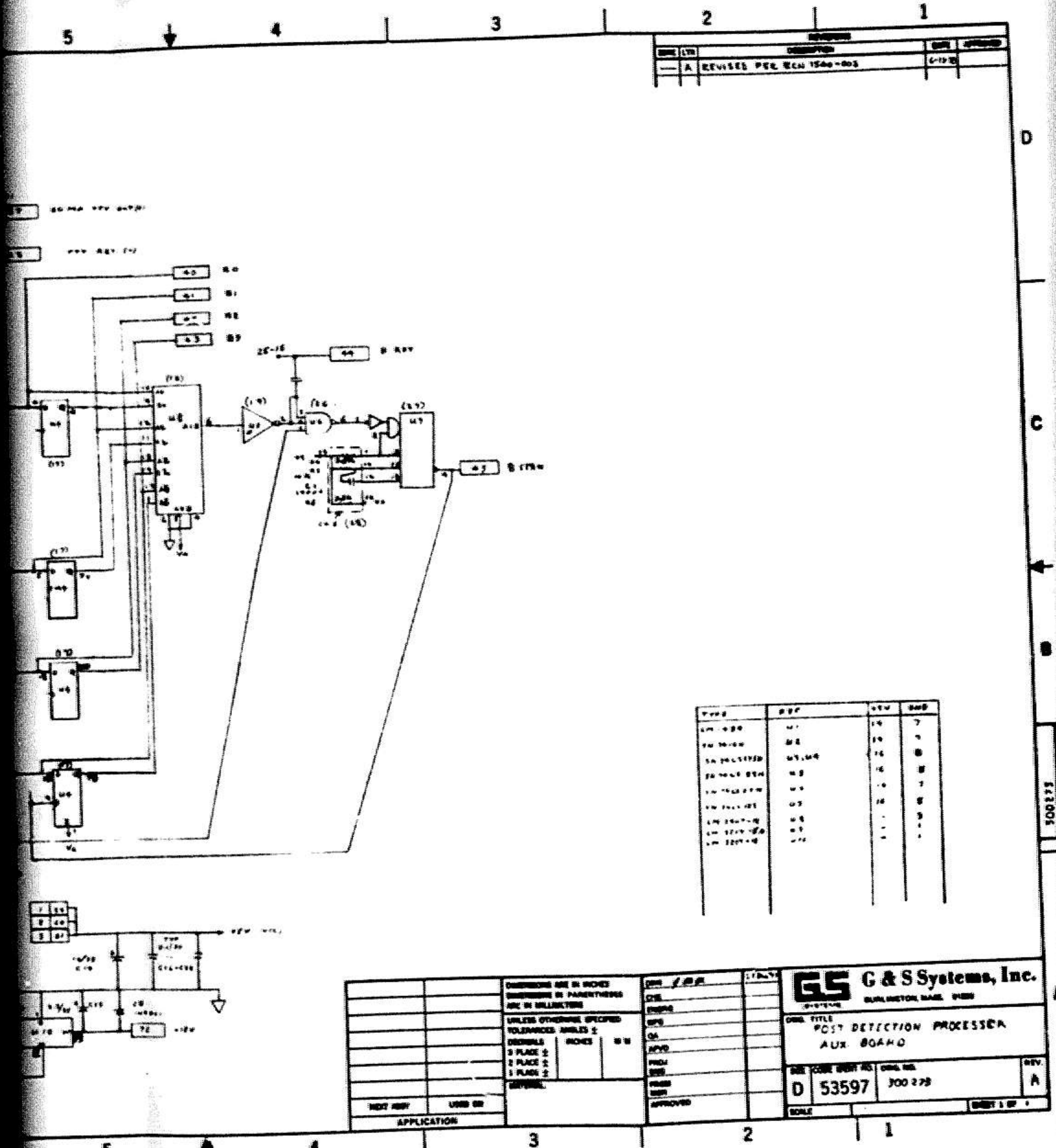

A.1.3 Post Detection Processor Auxiliary Board

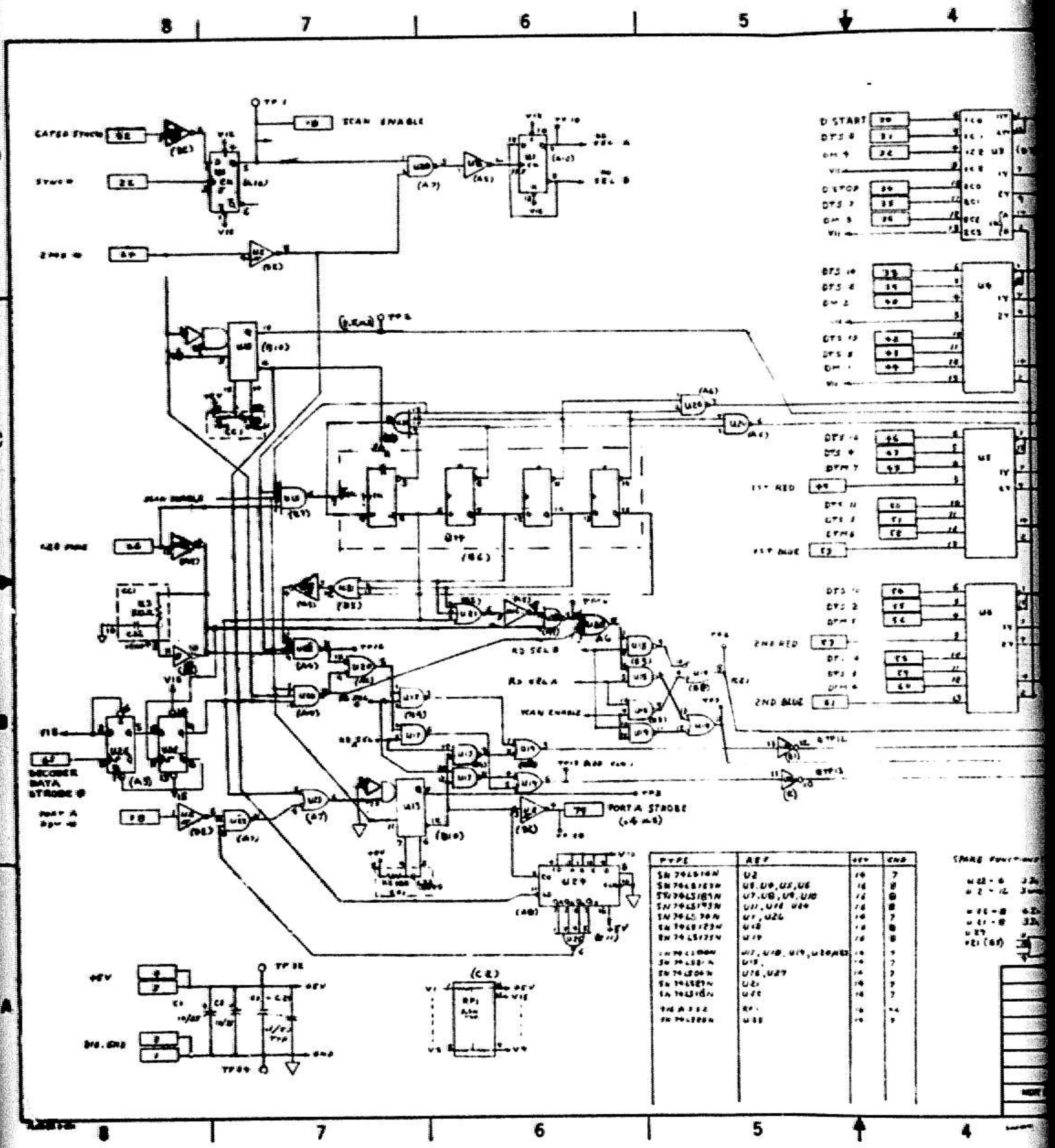
8
7
6
5
4
D
C
B
A
TP 1
SCAN ENABLE
GATED STROBE
STROBE
(A7)
SEL A
SEL B
TP 2
D START
DTS 8
DTS 7
D STOP
U3
U4
U5
U6
1Y
2Y
1ST RED
1ST BLUE
2ND RED
2ND BLUE
U19
(B6)
SCAN ENABLE
RD SEL B
RD SEL A
DECODER DATA STROBE
PORT A STROBE
U13
U24
TP 3
(CE)
RP1
+5V
GND
TYPE
REF
+5V
GND
SN 74LS14N
U2
U11, U12, U24
U7, U26
U16, U27
SPARE FUNCTIONS

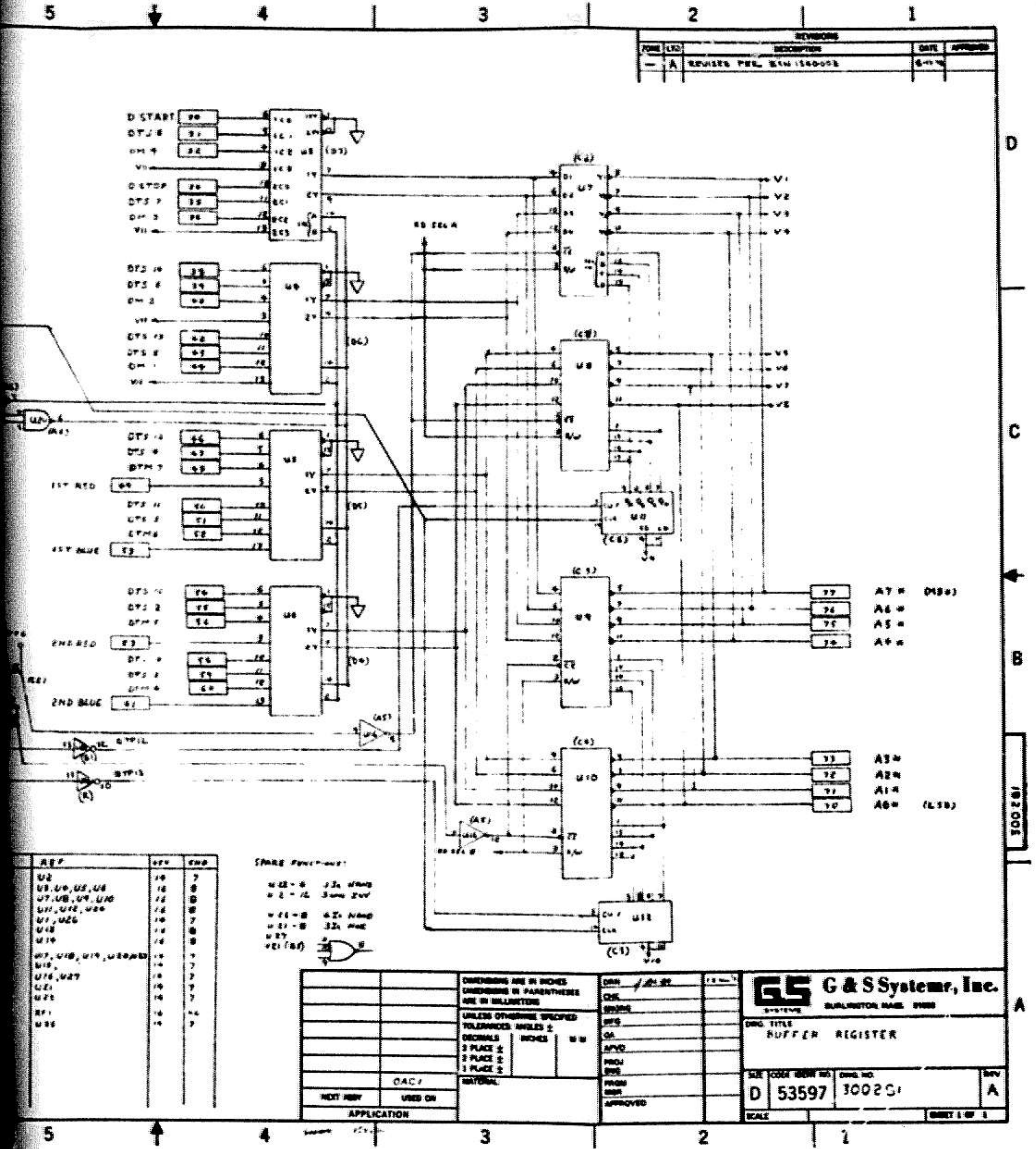

A.1.4 Buffer Register

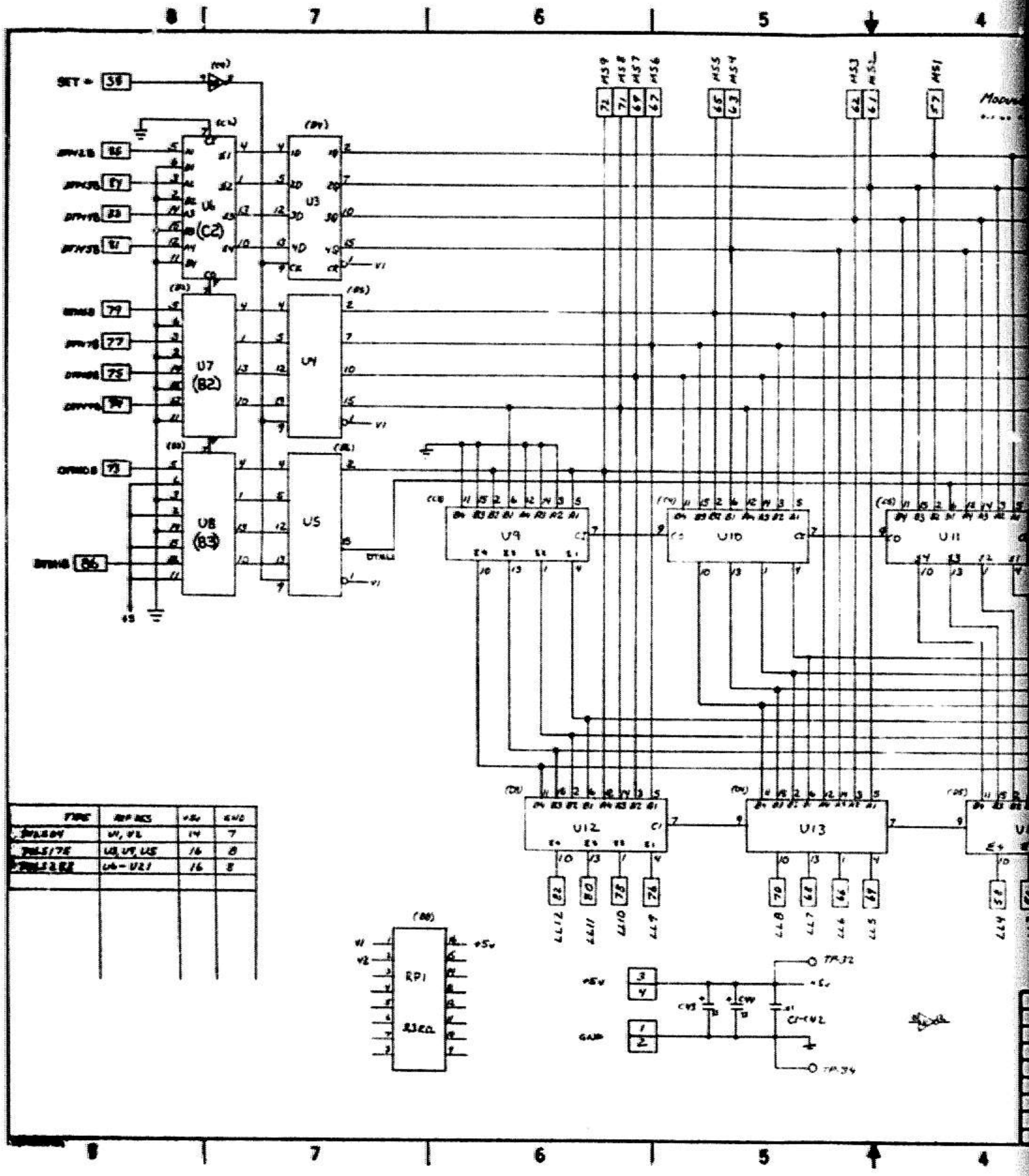

TYPE	REF DES	+5v	GND
[illegible]	U1, U2	14	7
[illegible]	U3, U4, U5	16	8
[illegible]	U6 - U21	16	8

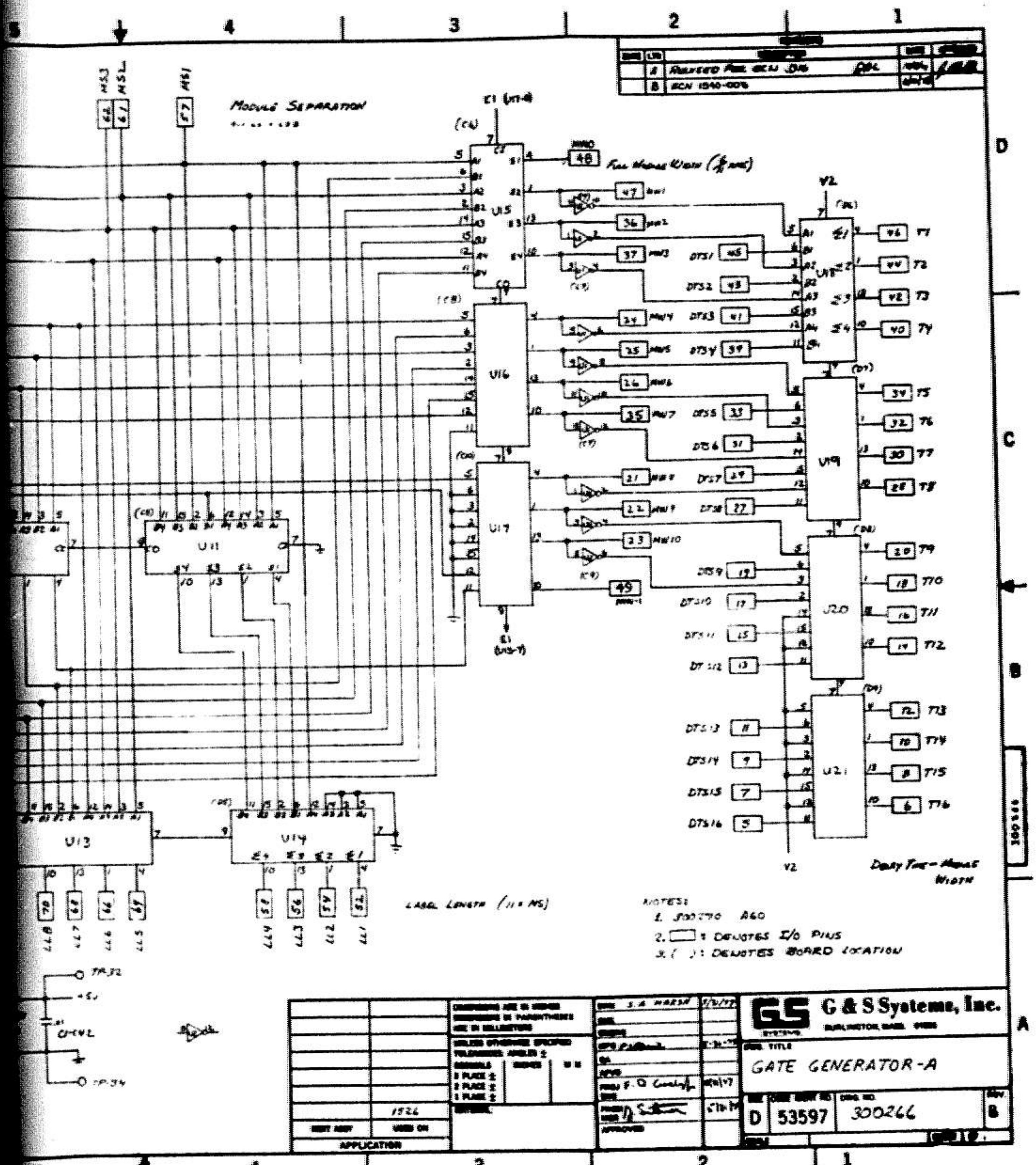

A.1.5 Gate Generator-A

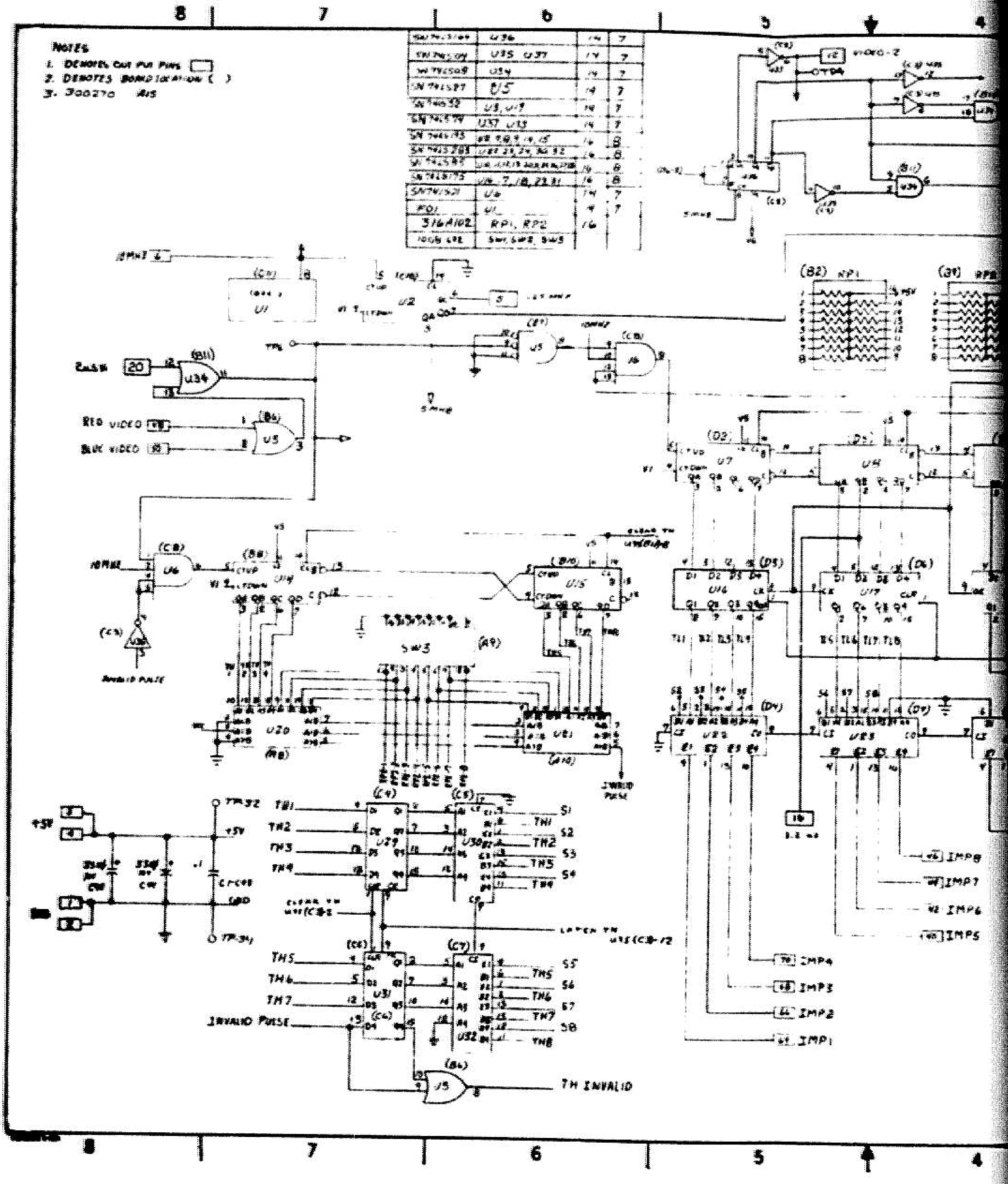

NOTES
1. DENOTES CUT PIN PINS ☐
2. DENOTES BOARD LOCATION ( )
3. 300270 A15

SN74LS164	U36	14	7
SN74LS04	U35 U37	14	7
SN74LS08	U34	14	7
SN74LS27	U5	14	7
SN74LS32	U3, U-?	14	7
SN74LS74	U37 U13	14	7
SN74LS193	U2 7,8,9,14,15	16	8
SN74LS283	U22 23,24,30 32	16	8
SN74LS[illegible]	[illegible]	16	8
SN74LS175	U16, 7, 18, 22 31	16	8
SN74LS21	U6	14	7
F01	U1	14	7
316A102	RP1, RP2	16	
100G 6??	SW1, SW2, SW3		

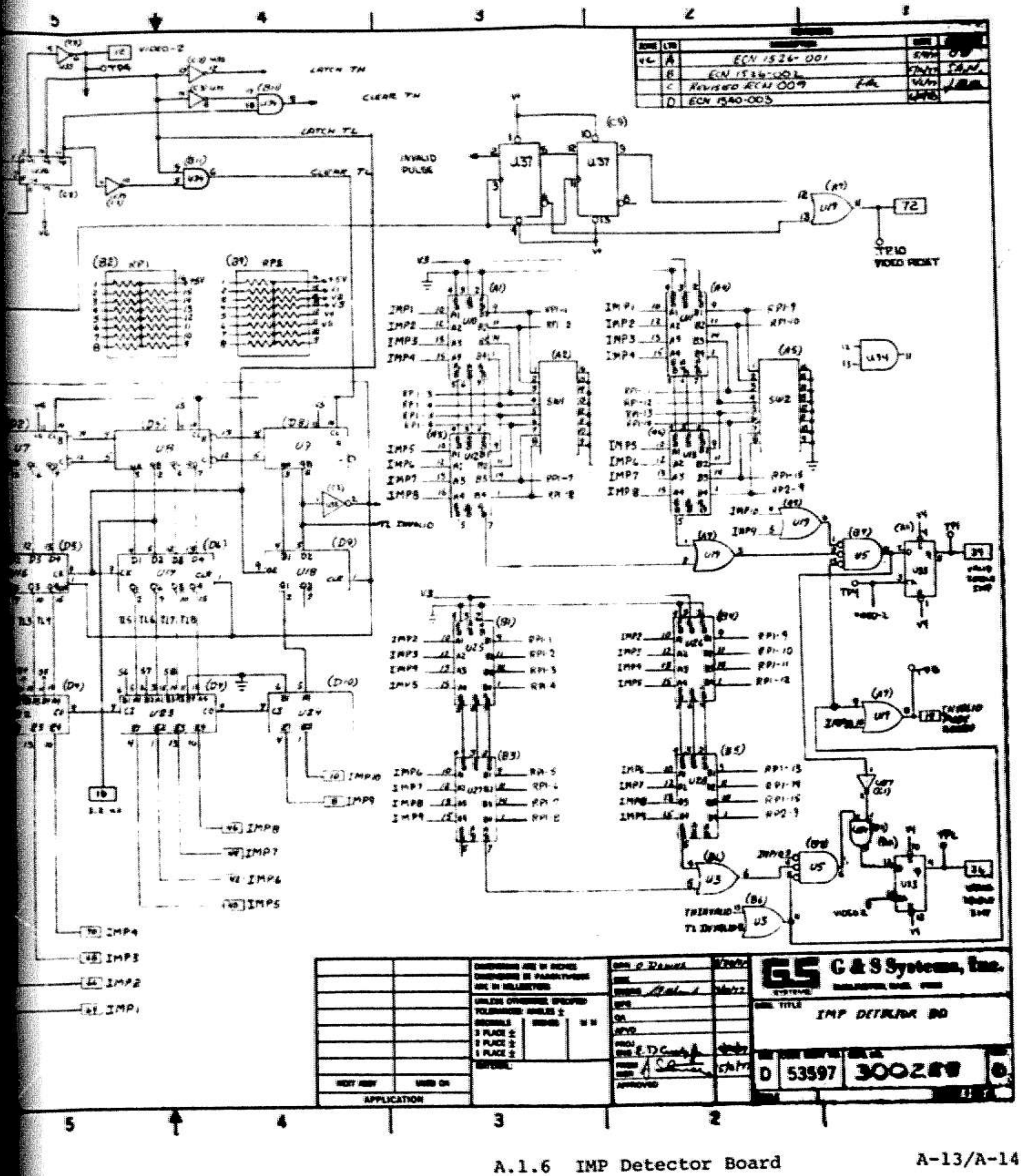

A.1.6 IMP Detector Board

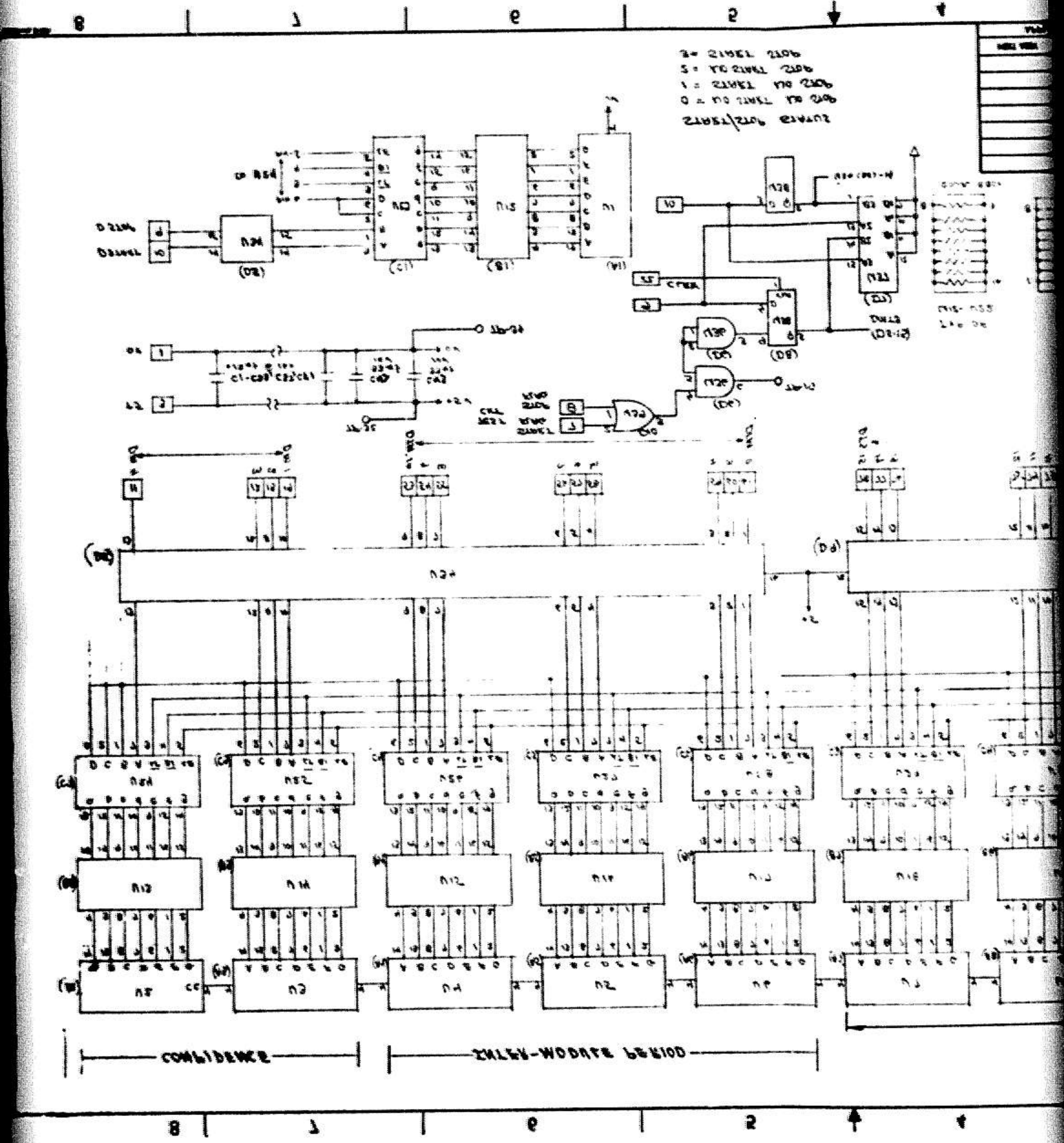
8
7
6
5
4
START/STOP STATUS
0 = NO START NO STOP
1 = START NO STOP
2 = NO START STOP
3 = START STOP
CONFIDENCE
PERIOD

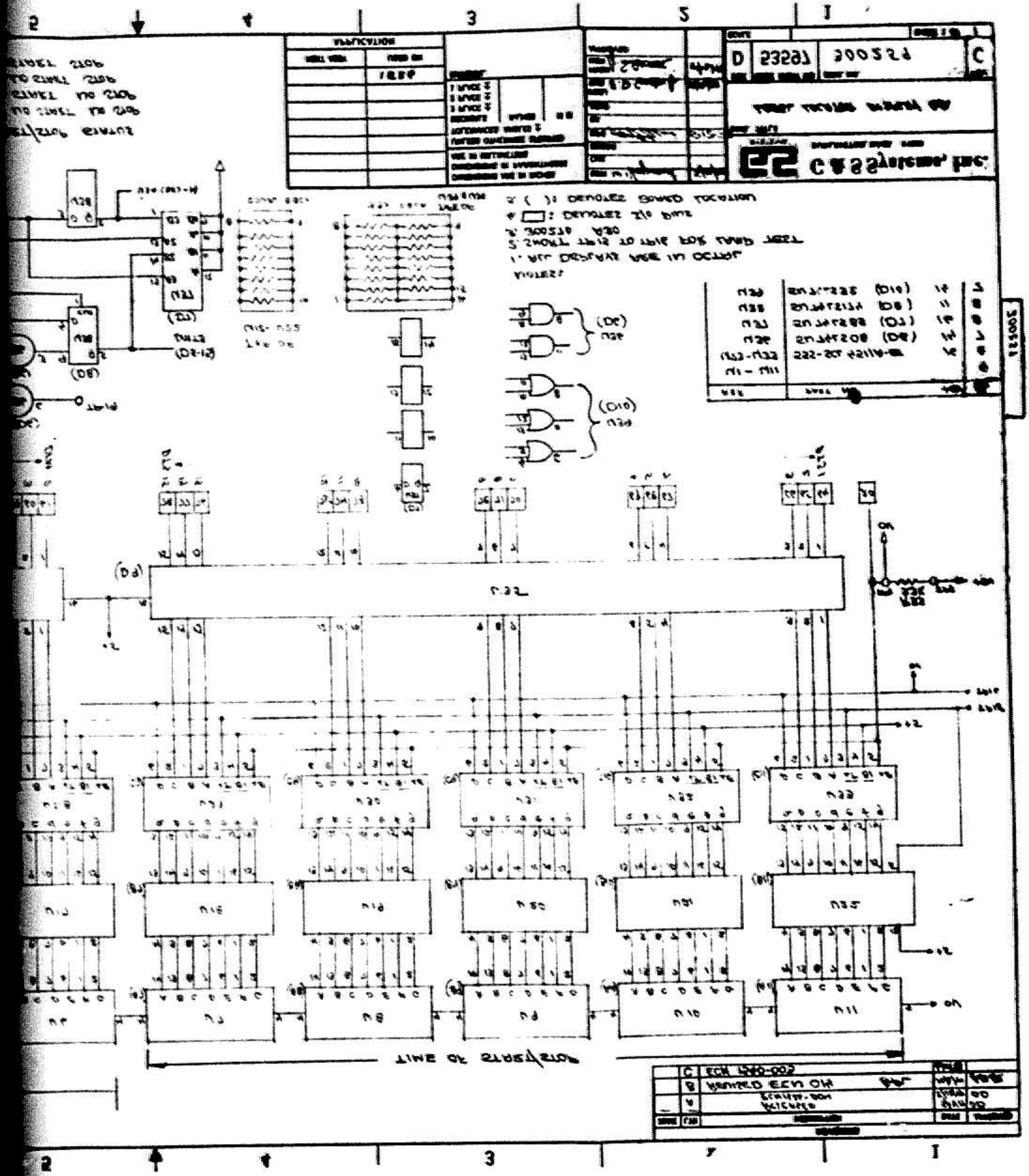

A.1.7 Label Locator Display Board

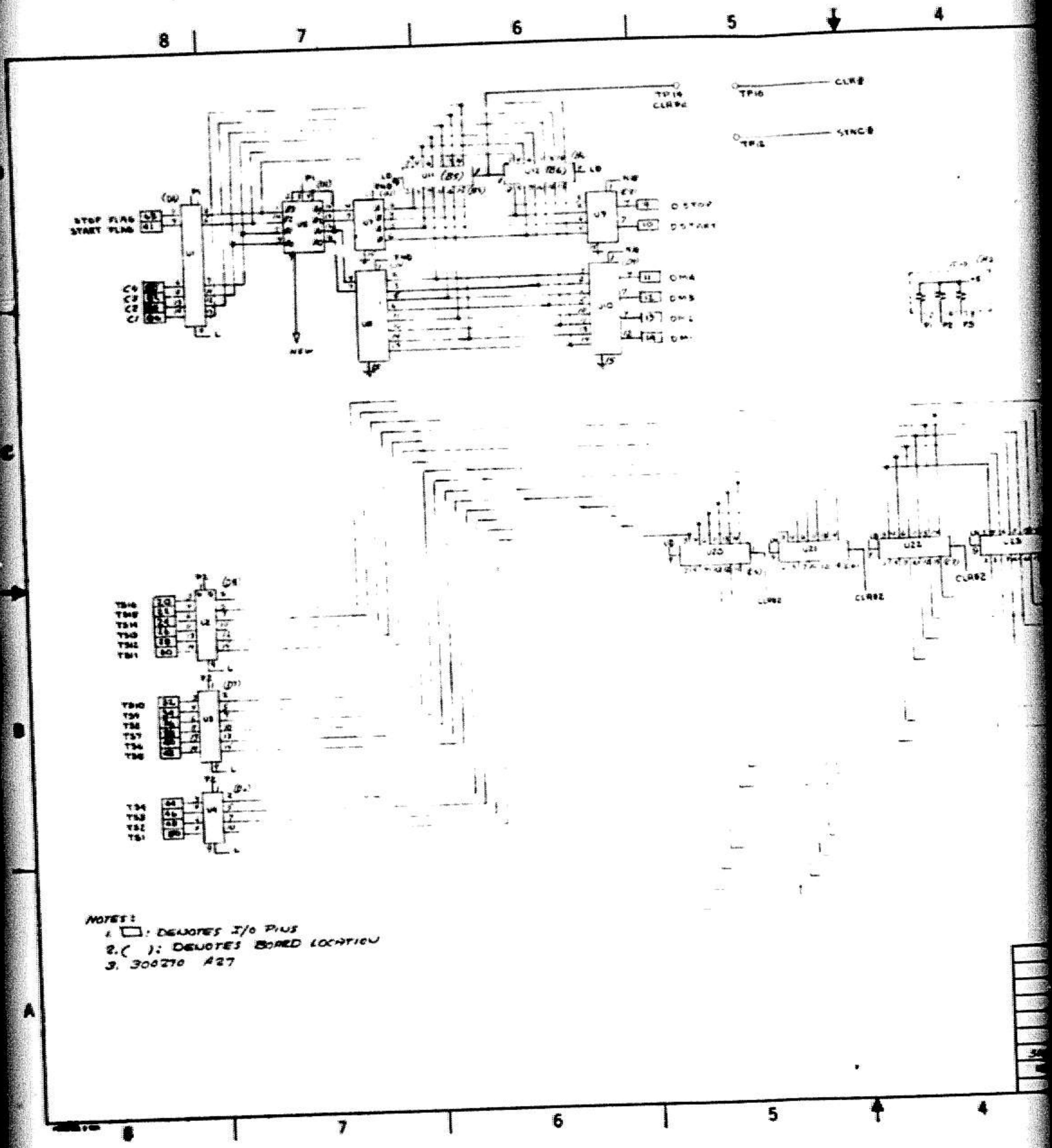

NOTES:
1. ☐: DENOTES I/O PINS
2. ( ): DENOTES BOARD LOCATION
3. 300270 A27

ZONE	LTR	DESCRIPTION	DATE	APPROVED
—	—	RELEASED	[illegible]	[illegible]
	A	REVISED ECN 013	[illegible]	[illegible]
	B	REVISED ECN 1540-003	6/19/78	

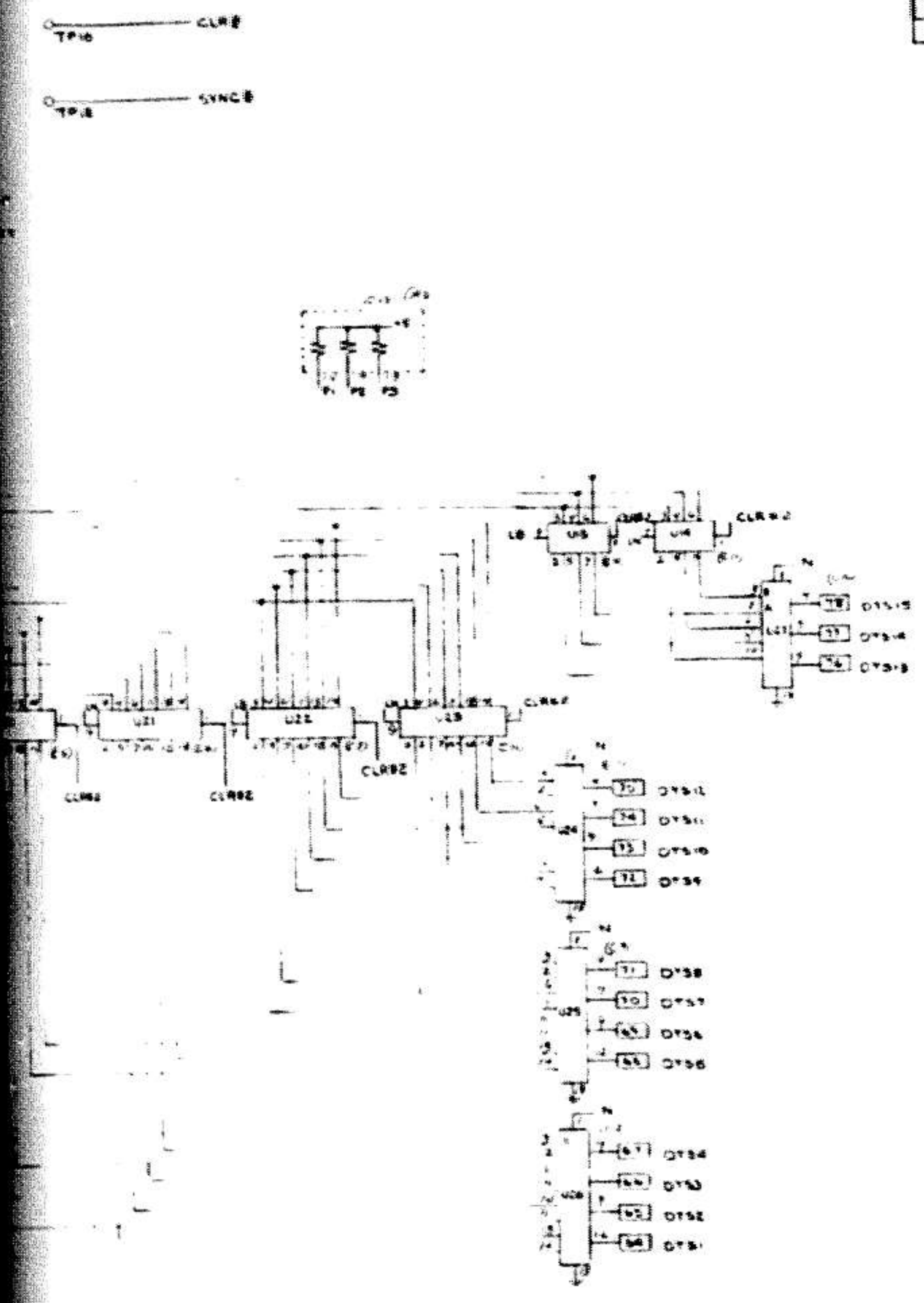

NOTES:

1. FOR CONTINUOUS READS (EACH SCAN) JUMPER TP14 TO TP12 AND JUMPER TP23 TO +5V (TP1).
2. FOR ONE READ JUMPER TP14 TO TP16 AND JUMPER TP22 TO TP23. MOMENTARILY DEPRESS RESET SWITCH.
3. FOR EXTERNAL CONTROL OF READ'S JUMPER TP14 TO TP12 AND JUMPER TP21 TO TP23 PROVIDE A 5 VOLT PULSE (800 µ SEC MIN) PRIOR TO SYNC PULSE OF SCAN TO BE READ.

NEXT ASSY	USED ON
300159	576

APPLICATION

DIMENSIONS ARE IN INCHES
DIMENSIONS IN PARENTHESES ARE IN MILLIMETERS
UNLESS OTHERWISE SPECIFIED
TOLERANCES: ANGLES ±
DECIMALS INCHES MM
3 PLACE ±
2 PLACE ±
1 PLACE ±

DWN E D C[illegible] 5/9/77
CHK D Downs [illegible]
ENGRG
MFG
QA
APVD
PROJ ENG E D C[illegible] 5/9/77
PRGM MGR [illegible]
APPROVED

G & S Systems, Inc.
BURLINGTON, MASS. 01803

DWG TITLE DISPLAY BUFFER

SIZE	CODE IDENT NO	DWG NO	REV
D	53597	300262	B

SCALE
SHEET 1 OF 2

300262

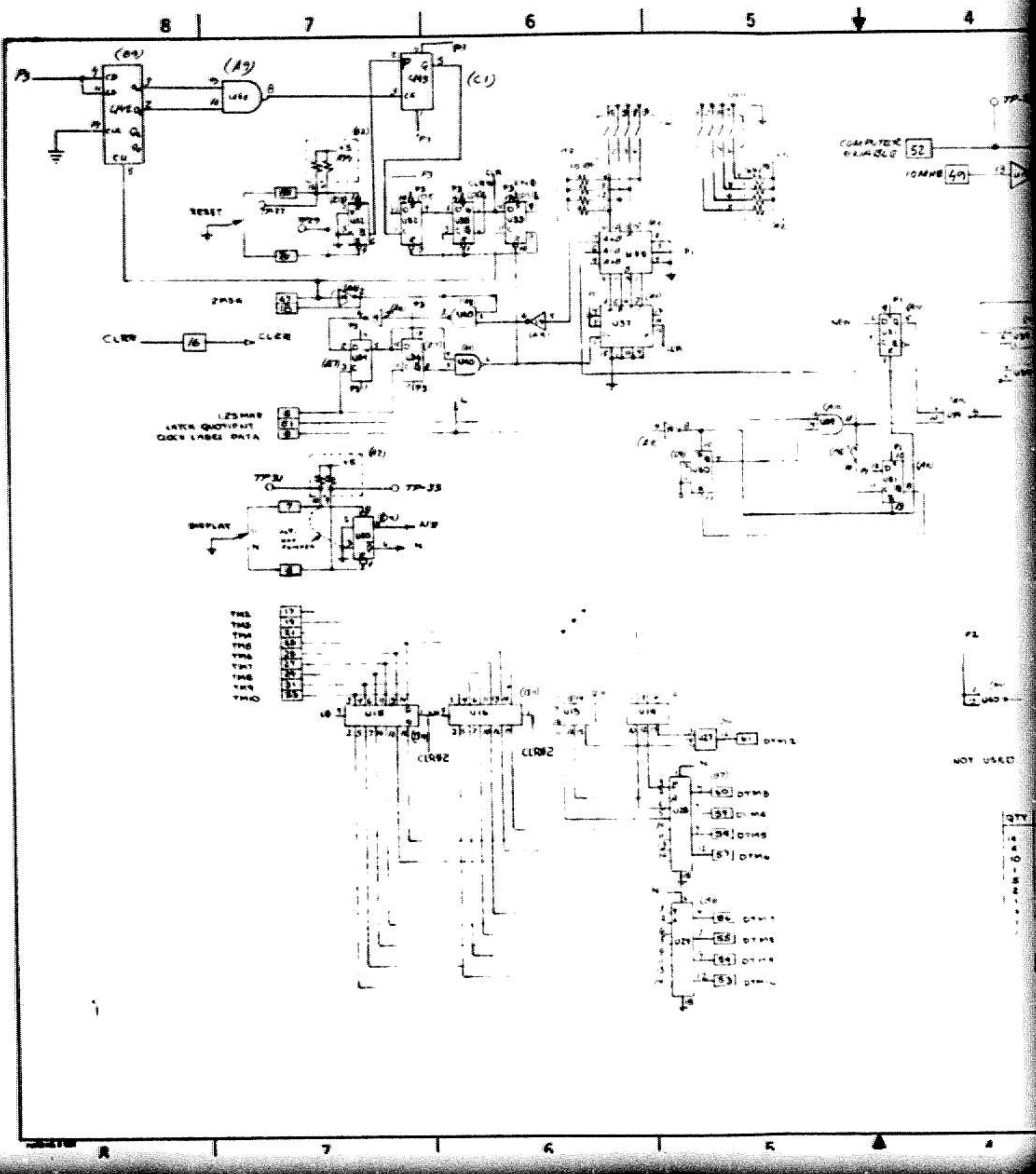
8
7
6
5
4
P3
(B9)
(A9)
U44
U43
(C1)
P1
RESET
TP17
TP29
U51
U50
U33
ZMS4
42
CLRR
16
CLRR
(A8)
U37
U35
COMPUTER ENABLE
52
10MHZ
49
LZSMHZ
LATCH QUOTIENT
CLOCK LABEL DATA
TP31
TP-33
DISPLAY
ALT. DOT POWER
A/B
U20
TM10
35
U18
U16
CLR82
CLR82
U15
U14
U27
U28
50
DTM8
51
DTM4
58
DTM5
57
DTM6
55
54
53
NOT USED
QTY
P2
NEW
8
7
6
5

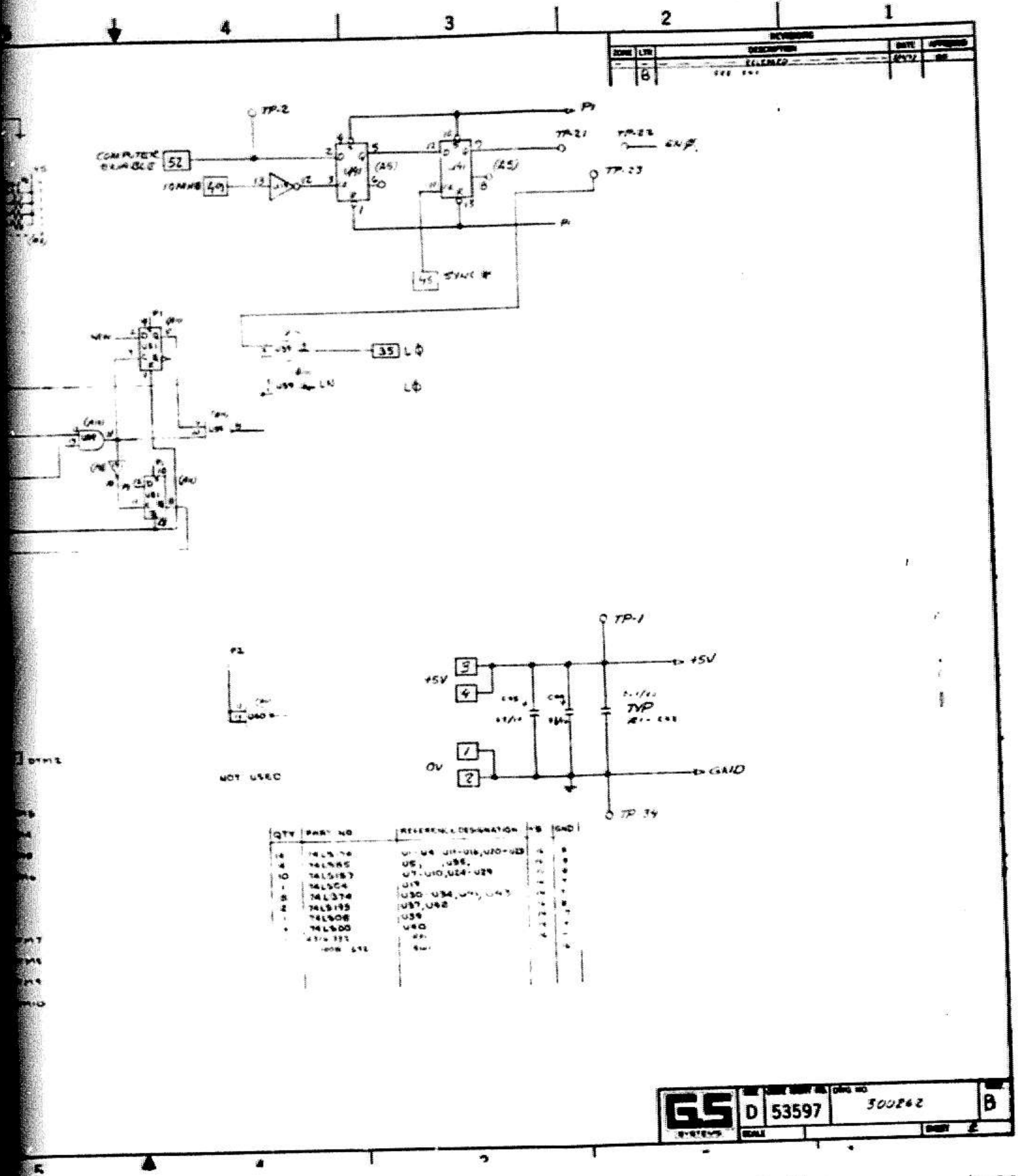

A.1.8 Display Buffer

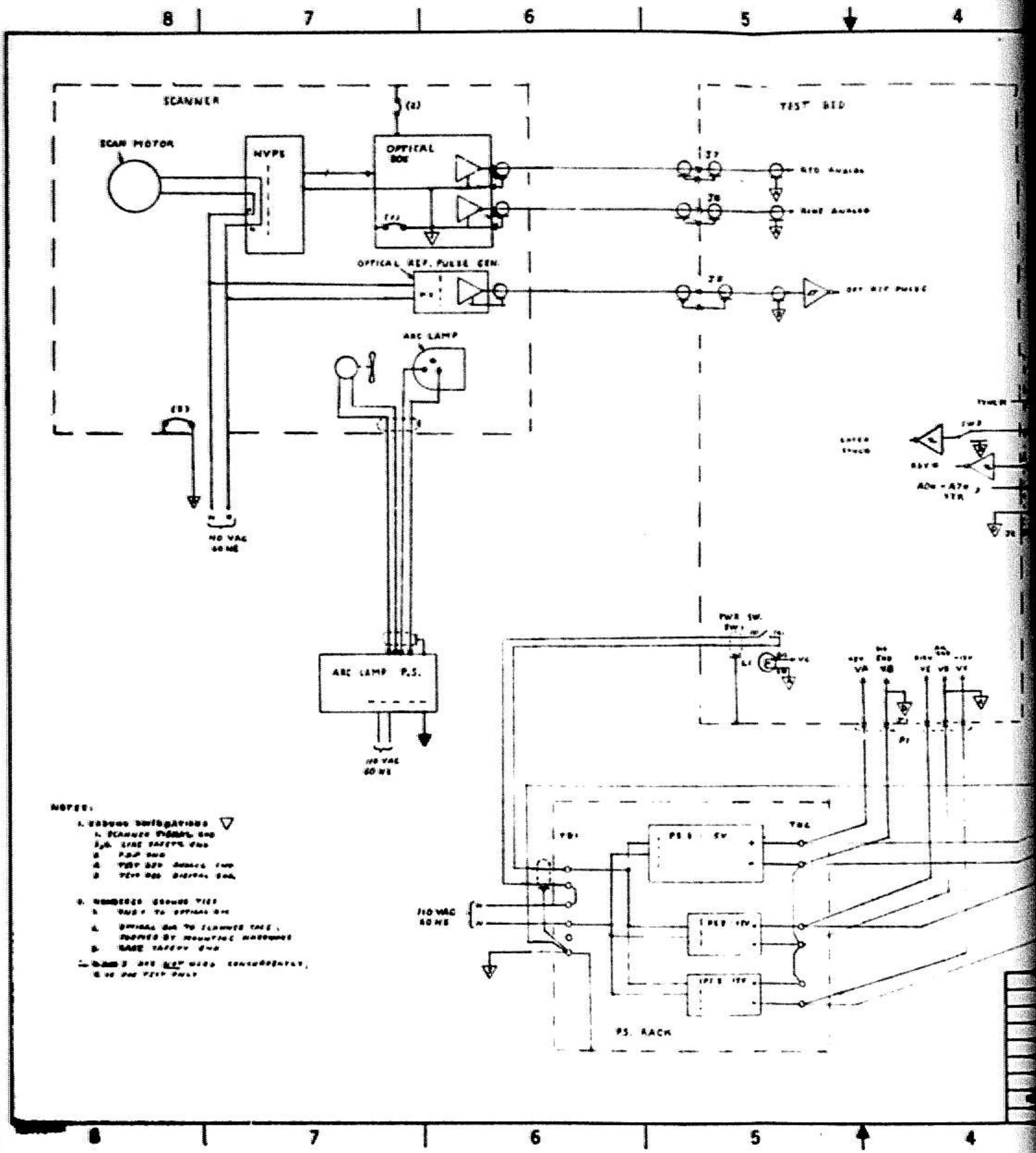

NOTES:

1. GROUND DESIGNATIONS ▽
   1. SCANNER [illegible] GND
   2,6. LINE SAFETY GND
   3. P.S.P GND
   4. TEST BED ANALOG GND
   5. TEST BED DIGITAL GND
2. NUMBERED GROUND TIES
   1. [illegible] TO OPTICAL BOX
   2. OPTICAL BOX TO SCANNER FACE, FORMED BY MOUNTING HARDWARE
   3. BASE SAFETY GND
3. [illegible] 3 ARE NOT USED CONCURRENTLY, 6 IS FOR TEST ONLY

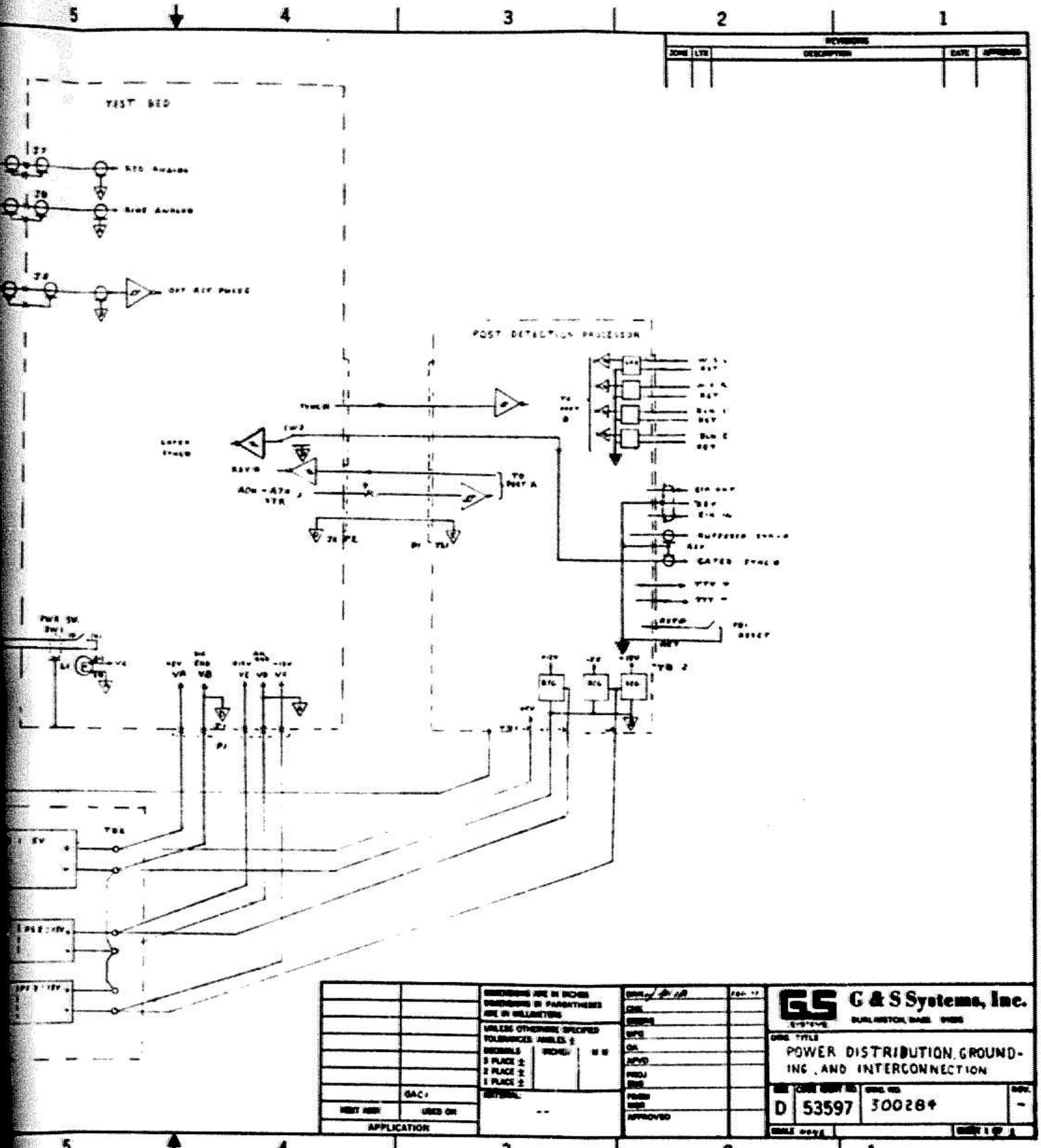

A.1.9 Power Distribution, Grounding and Interconnection

NOTES
1. DENOTES OUTPUT PINS ☐
2. DENOTES BOARD LOCATION ( )
3. 300279 A29

DEVICE	REF DES	+5	GND
SN74LS283	U1,U2,U5,U10,U11,U12	16	8
SN74LS157	U4,U5,U6	16	8
SN74LS175	U7,U8,U9,[illegible]	16	8
SN74LS00	U13	14	7
SN74LS74	U14,U21,U28,U32	14	7
SN74LS173	U15-U18,U30	16	8
SN74LS32	U29	14	7
SN74LS00	U23,U39	14	7
SN74LS04	U26,U38	14	7
SN74LS02	U27	14	7
SN74LS20	U24	14	7
SN74LS85	U31	16	8
SN74LS164	U33,U35,U36,U37	14	7
SN74LS42	U34	16	8
316A102	RP1	16	—
SN74LS86	U40	14	7

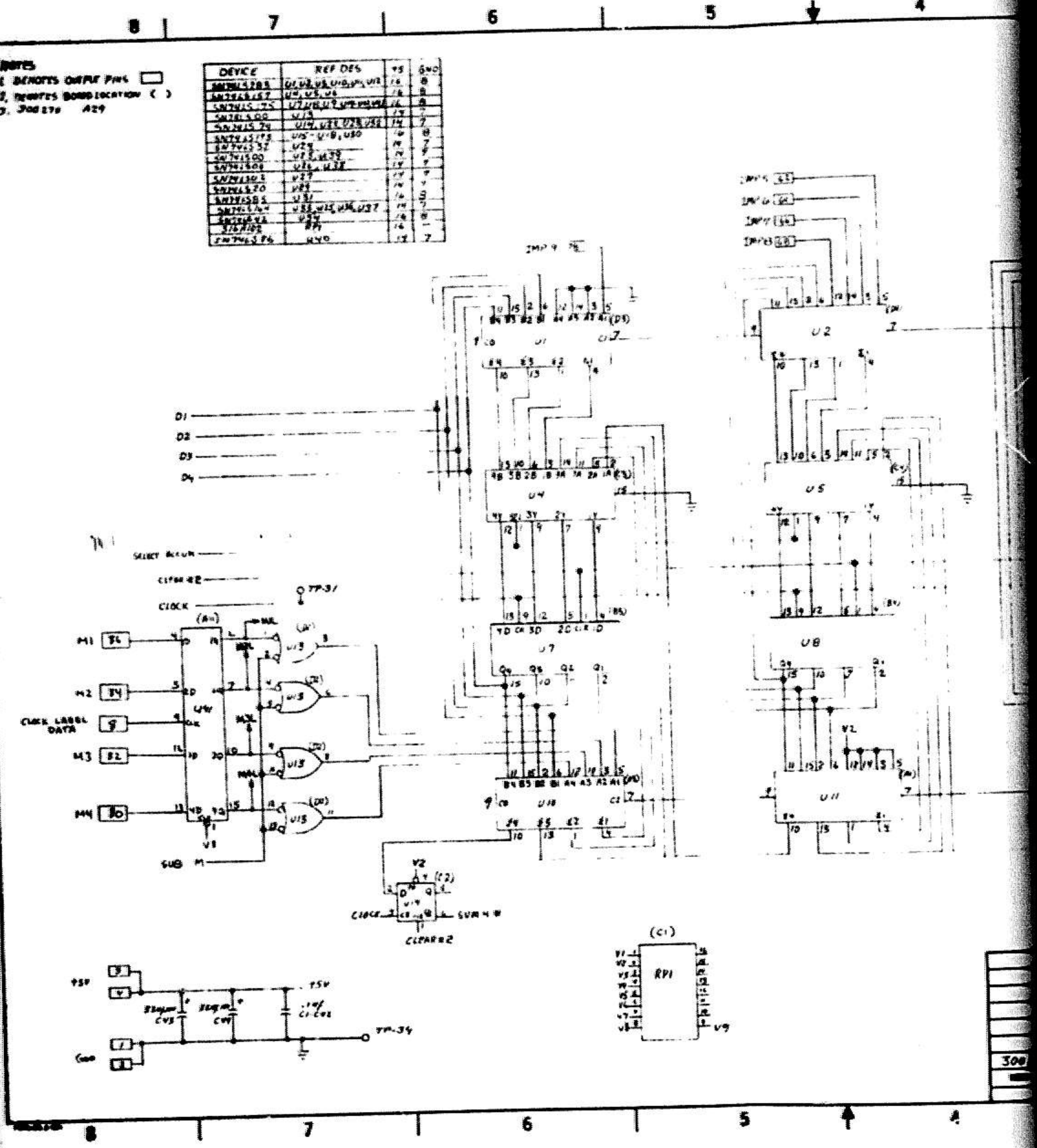

	LTR	DESCRIPTION		
	A	ECN 1586-005	[illegible]	[illegible]
	B	REVISED ECN 012	[illegible]	[illegible]
	C	ECN 1590-003	[illegible]	

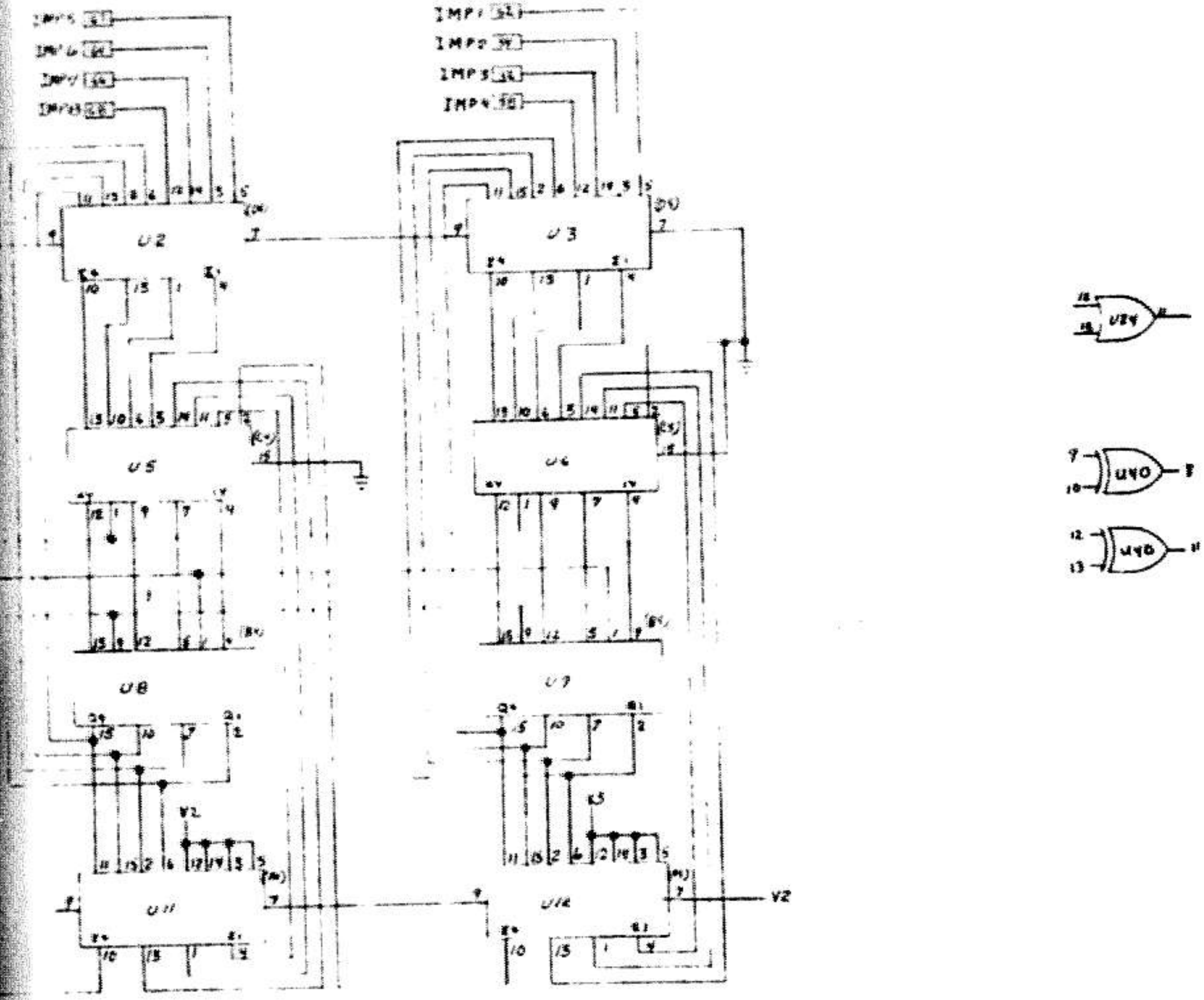

300254	1586
APPLICATION	

D.Downs

G & S Systems, Inc.

LABEL LOCATION
CALCULATOR

D 53597 300258 C

A.1.10 Label Location Calculator

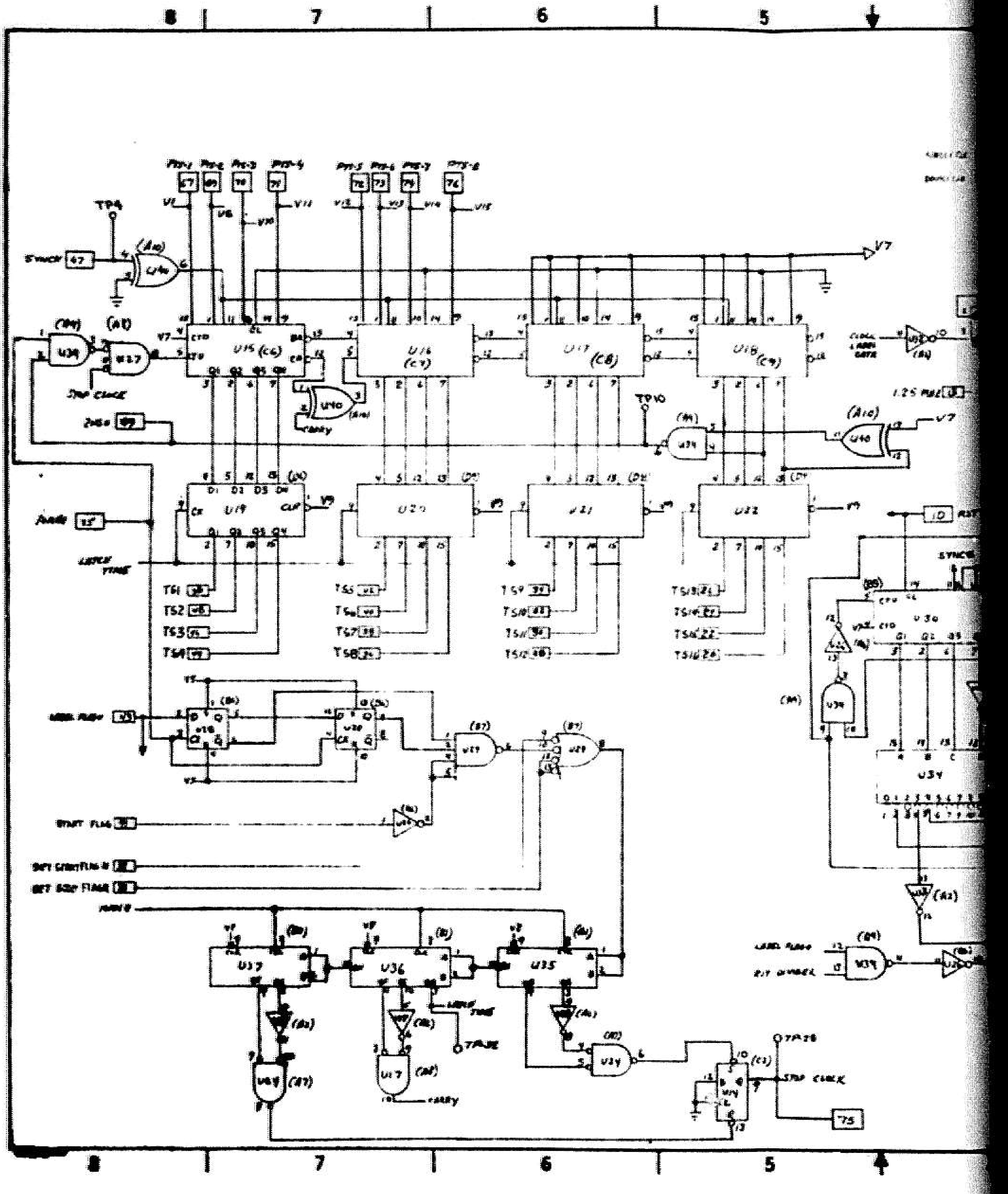

8
7
6
5
4
TP9
SYNCH
U40
U39
U37
STOP CLOCK
U15 (C6)
U16 (C7)
U17 (C8)
U18 (C9)
V7
U40
CARRY
TP10
U39
U40
1.25 MHZ
U19
U20
U21
U22
LATCH TIME
TS1
TS2
TS3
TS4
TS5
TS6
TS7
TS8
TS9
TS10
TS11
TS12
TS13
TS14
TS15
TS16
RST
SYNC
U30
U39
U34
START FLAG
U37
U29
U38
U36
U35
U64
U17
CARRY
LATCH TIME
TP28
U14
STOP CLOCK
75
U39

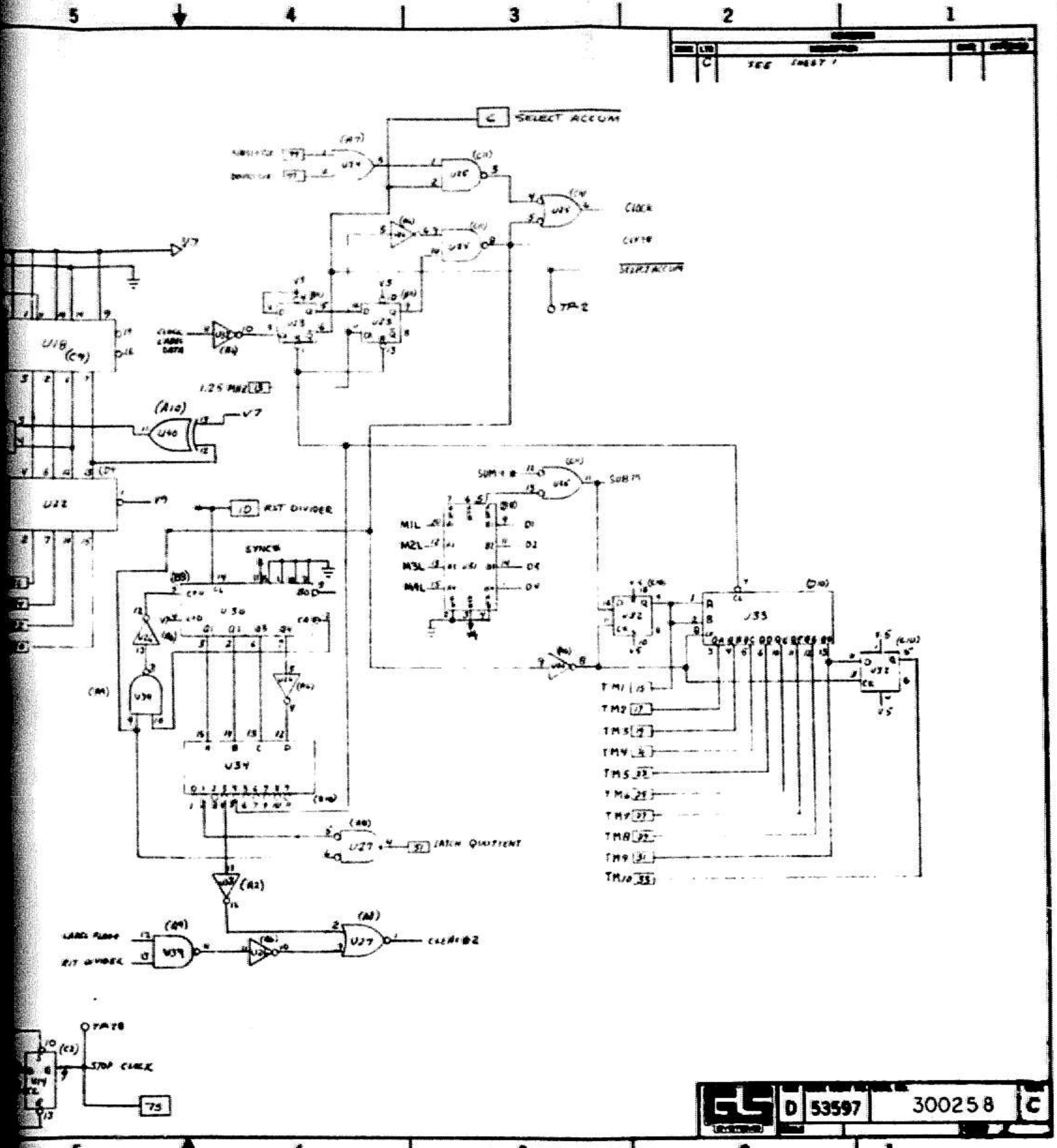

A.1.10 Label Location Calculator

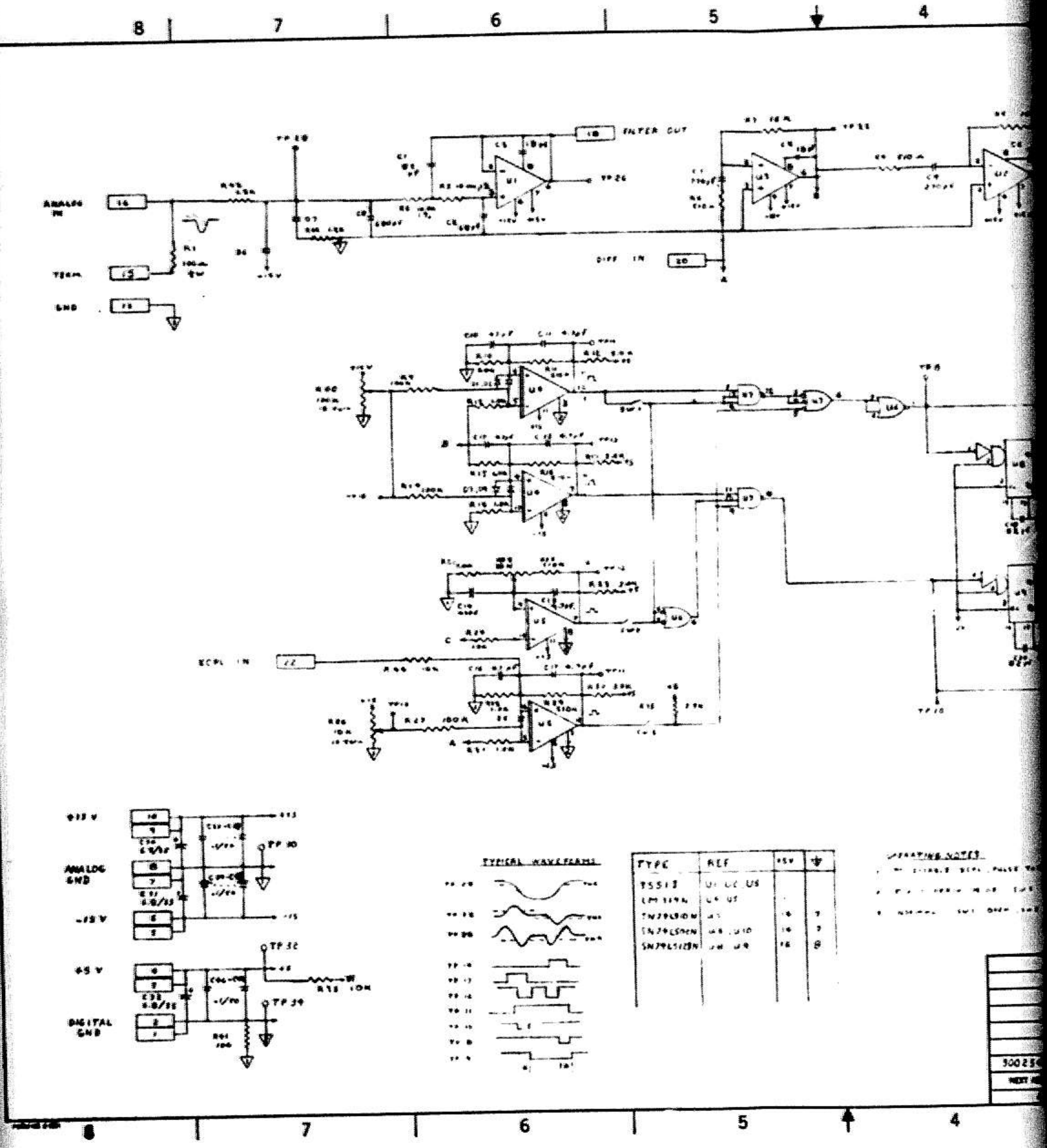

TYPE	REF	+5V	⏚
TS513	U1 U2 U3		
LM339N	U4 U5		
SN74LS10N	U7	14	7
SN74LS02N	U8, U10	14	7
SN74LS123N	U6 U9	16	8

REVISIONS				
ZONE	LTR	DESCRIPTION	DATE	APPROVED

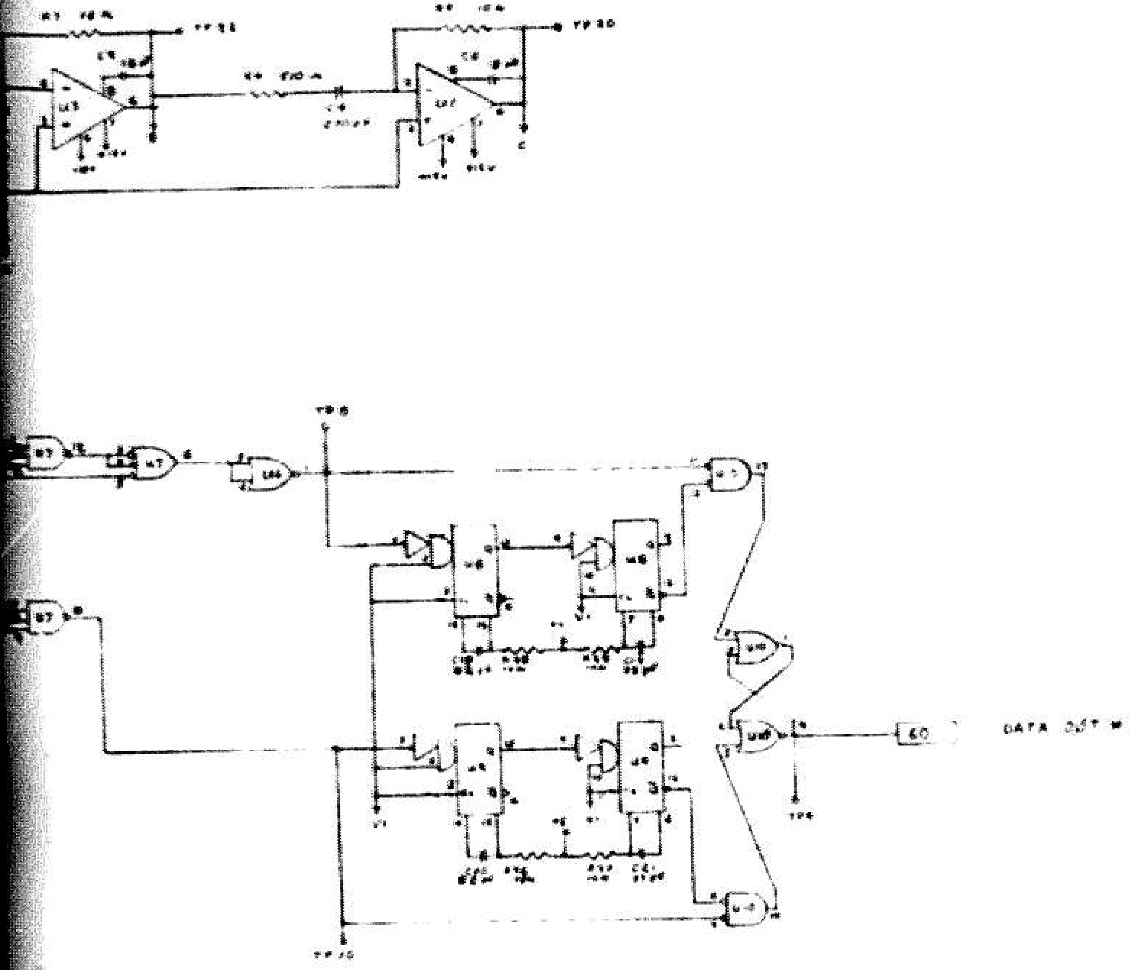

	+5V	GND
E,U5		
	–	
	16	7
U10	16	7
	16	8

OPERATING NOTES

1. [illegible]
2. [illegible]
3. [illegible]

		DIMENSIONS ARE IN INCHES DIMENSIONS IN PARENTHESES ARE IN MILLIMETERS	DRN	
		UNLESS OTHERWISE SPECIFIED TOLERANCES ANGLES ± DECIMALS INCHES MM 3 PLACE ± 2 PLACE ± 1 PLACE ±	CHK ENGRG MFG QA APVD PROJ ENG	
300254	DAC1	MATERIAL	PROGM MGR	
NEXT ASSY	USED ON		APPROVED	
APPLICATION				

G & S Systems, Inc.
BURLINGTON MASS 01803

DWG TITLE
ADAPTIVE THRESHOLD
COLOR CHANNEL

SIZE	CODE IDENT NO	DWG NO	REV.
D	53597	300285	-
SCALE		SHEET 1 OF	

A.1.11 Adaptive Threshold
Color Channel

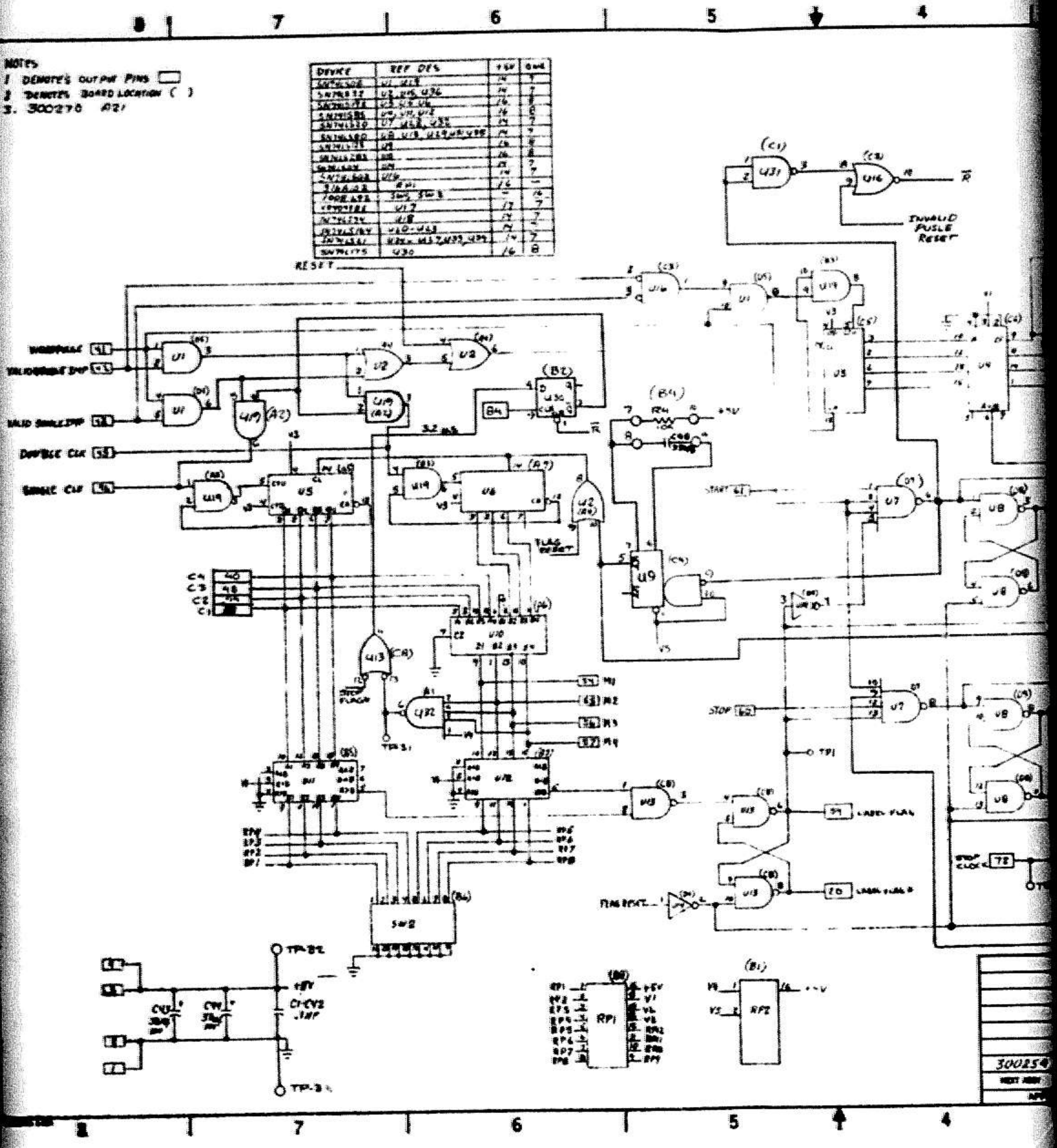

NOTES
1 DENOTES OUTPUT PINS ☐
2 DENOTES BOARD LOCATION ( )
3. 300270 A21

DEVICE	REF DES	+5V	GND
SN74LS00	U1, U19	14	7
SN74LS32	U2, U15, U36	14	7
SN74LS193	U5, U6	16	8
SN74LS85	[illegible]	16	8
SN74LS20	U7, U32, U34	14	7
[illegible]	[illegible]	14	7
[illegible]	U9	16	8
[illegible]	U8	16	8
[illegible]	U9	14	7
[illegible]	U16	14	7
[illegible]	RP1	16	—
[illegible]	SW2, SW3	—	16
[illegible]	U17	17	7
SN74LS74	U18	14	7
SN74LS[illegible]	U20-U23	14	7
[illegible]	[illegible]	14	7
SN74LS175	U30	16	8

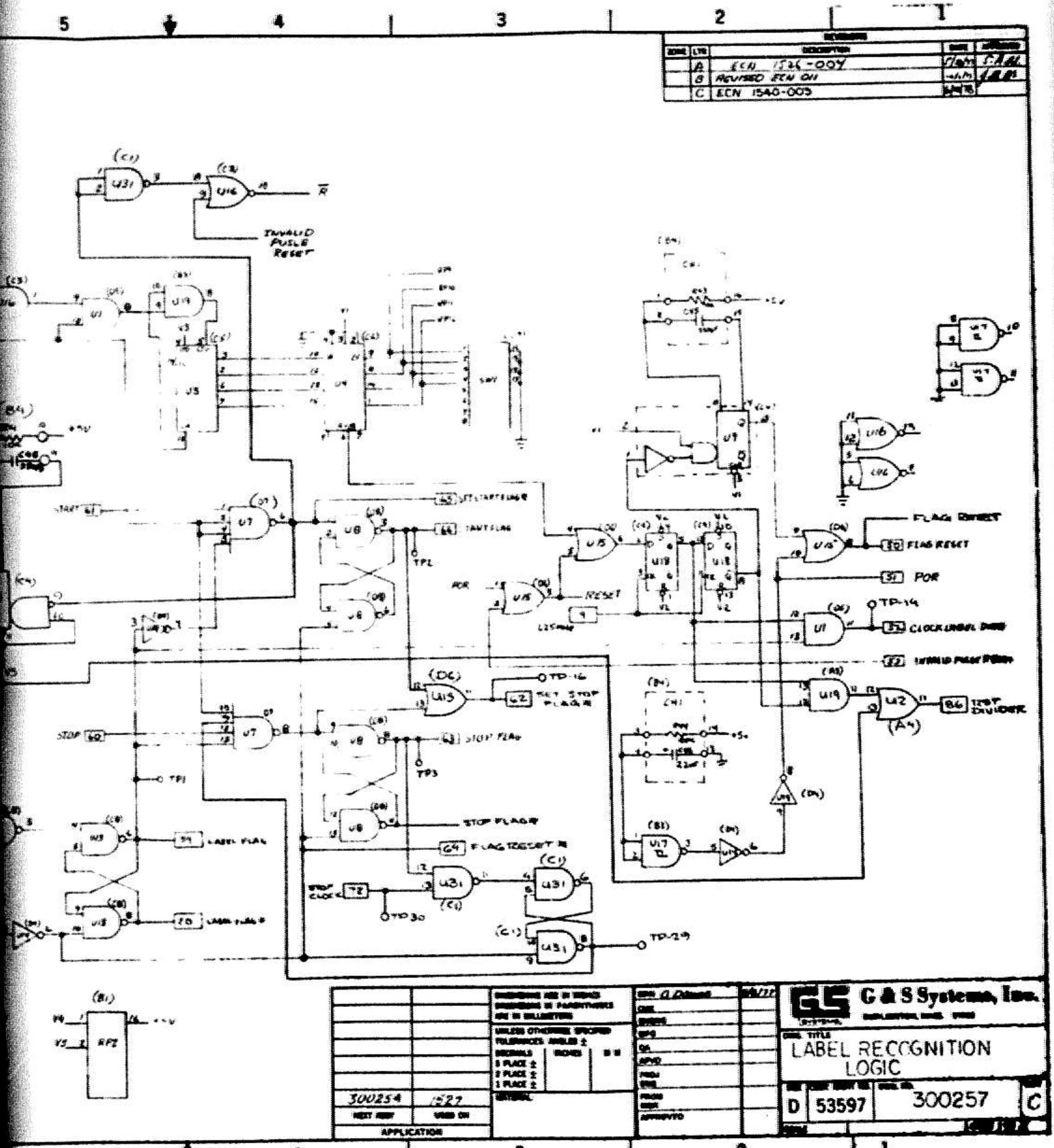

A.1.12 Label Recognition Logic

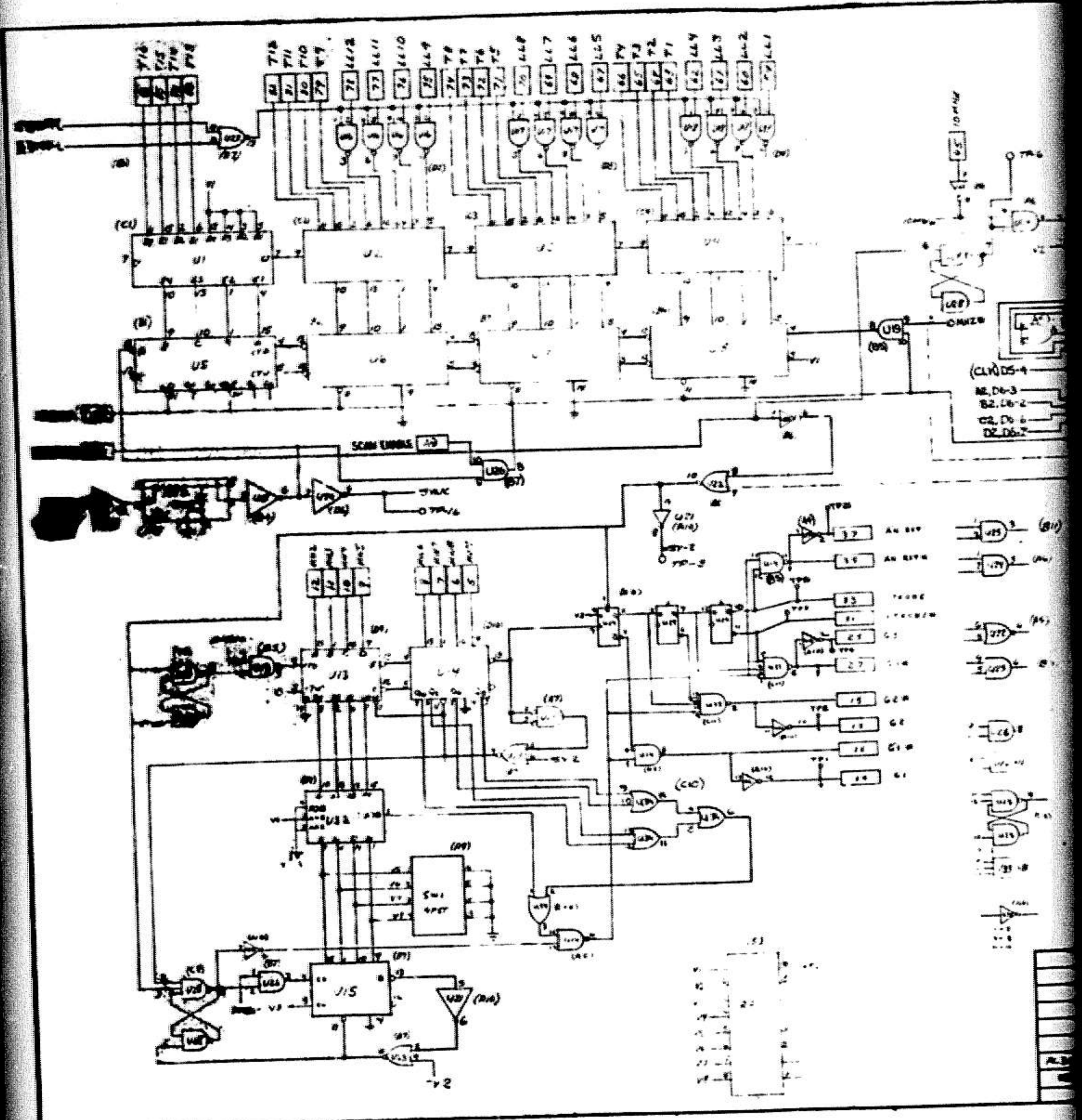
U1
U2
U3
U4
U5
U6
U7
U8
U13
U14
U15
U32
SCAN ENABLE
10 MHZ
TP-6
SYNC
TP-16
MHZ
(CLK) D5-4
B2, D6-3
B2, D6-2
C2, D6-6
D2, D6-7
TP-3
SW1
4PST
AN EXT
AN RTN
-V2

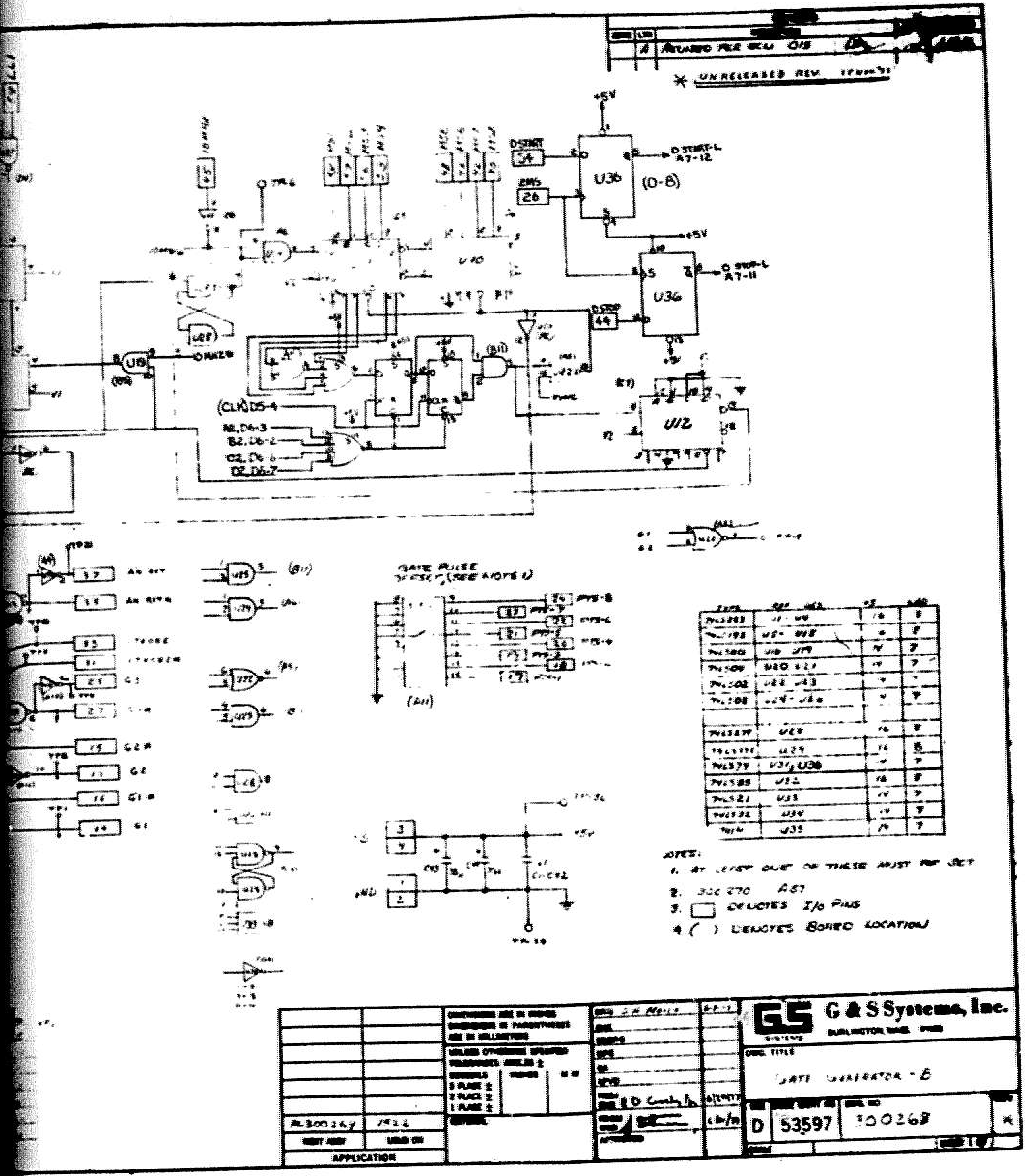

A.1.13 Gate Generator-B

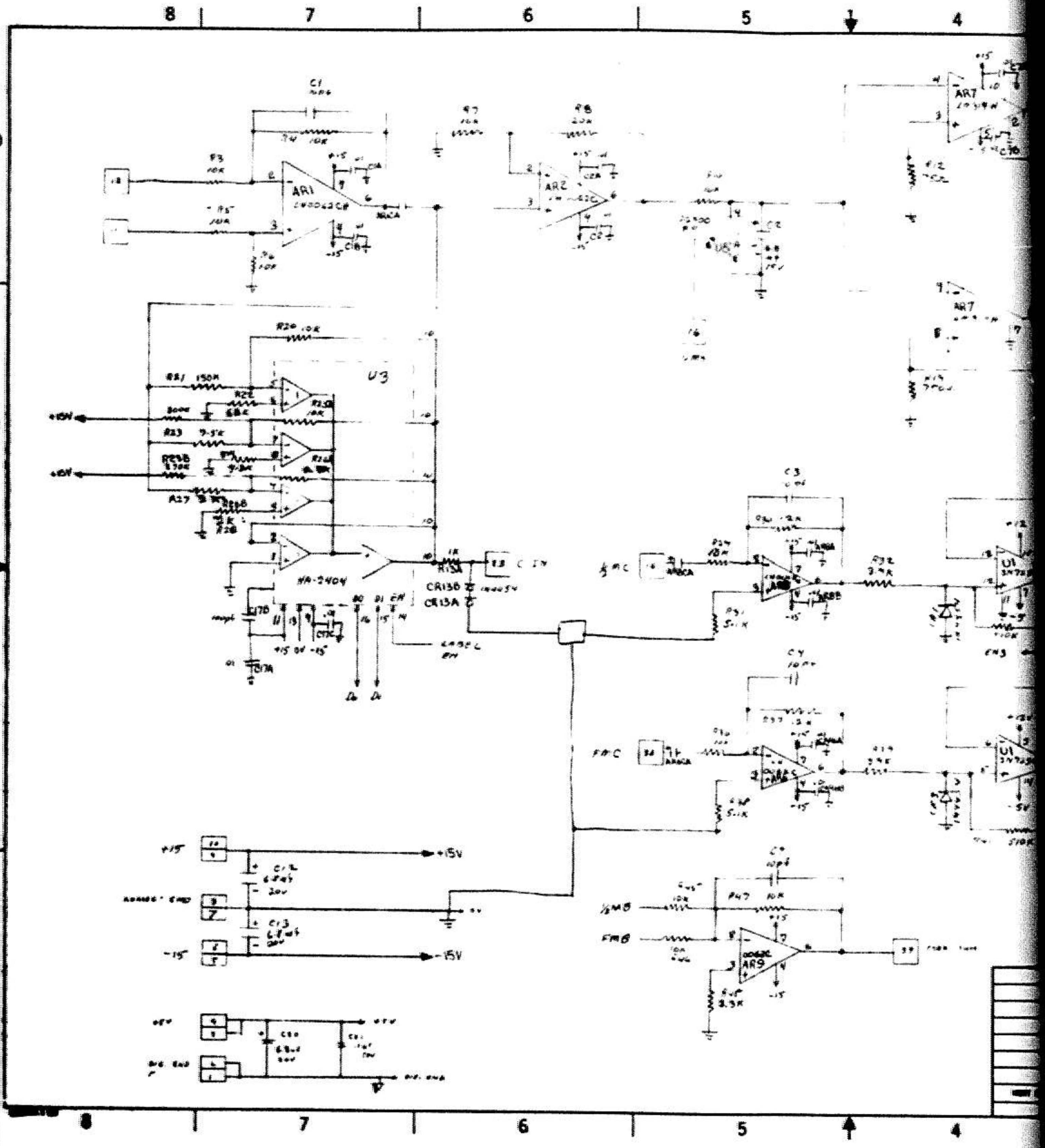

8
7
6
5
4
D
C
B
A
C1
R3 10K
AR1
AR2
R8 20K
R7 10K
U3
HA-2404
R21 150K
R22 68K
R23 9.5K
R25B
R27
R28
+15V
+15V
CR13B
CR13A
R13A
C17B
C17A
C3
C4
C9
AR7
AR9
U1
U1
R24 10K
R32 3.9K
R31 5.1K
1/2 MC
FMC
1/2 MB
FMB
R47 10K
+15
-15
C12
C13
+15V
-15V

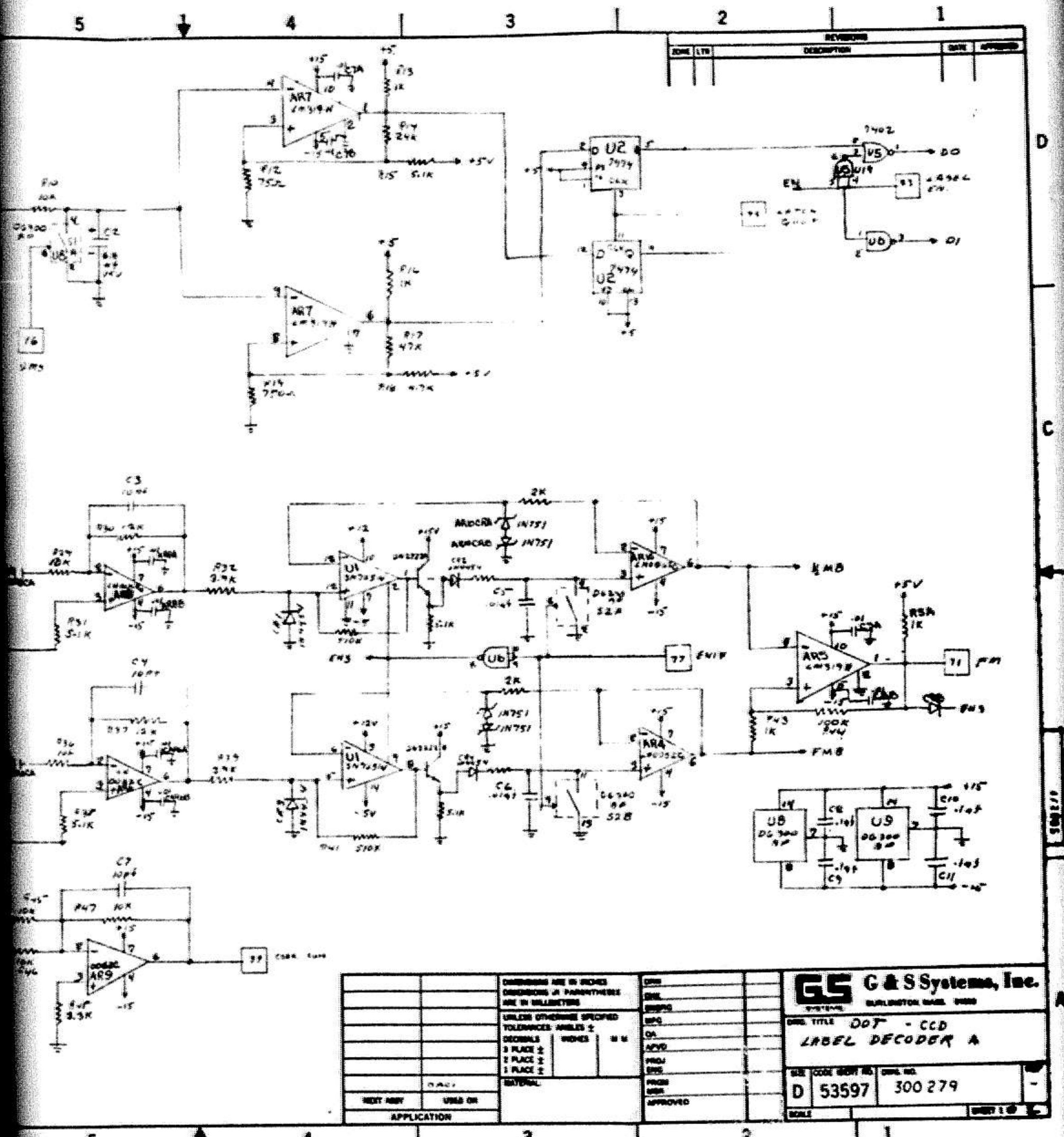

A.1.14 DOT-CCD Label Decoder A

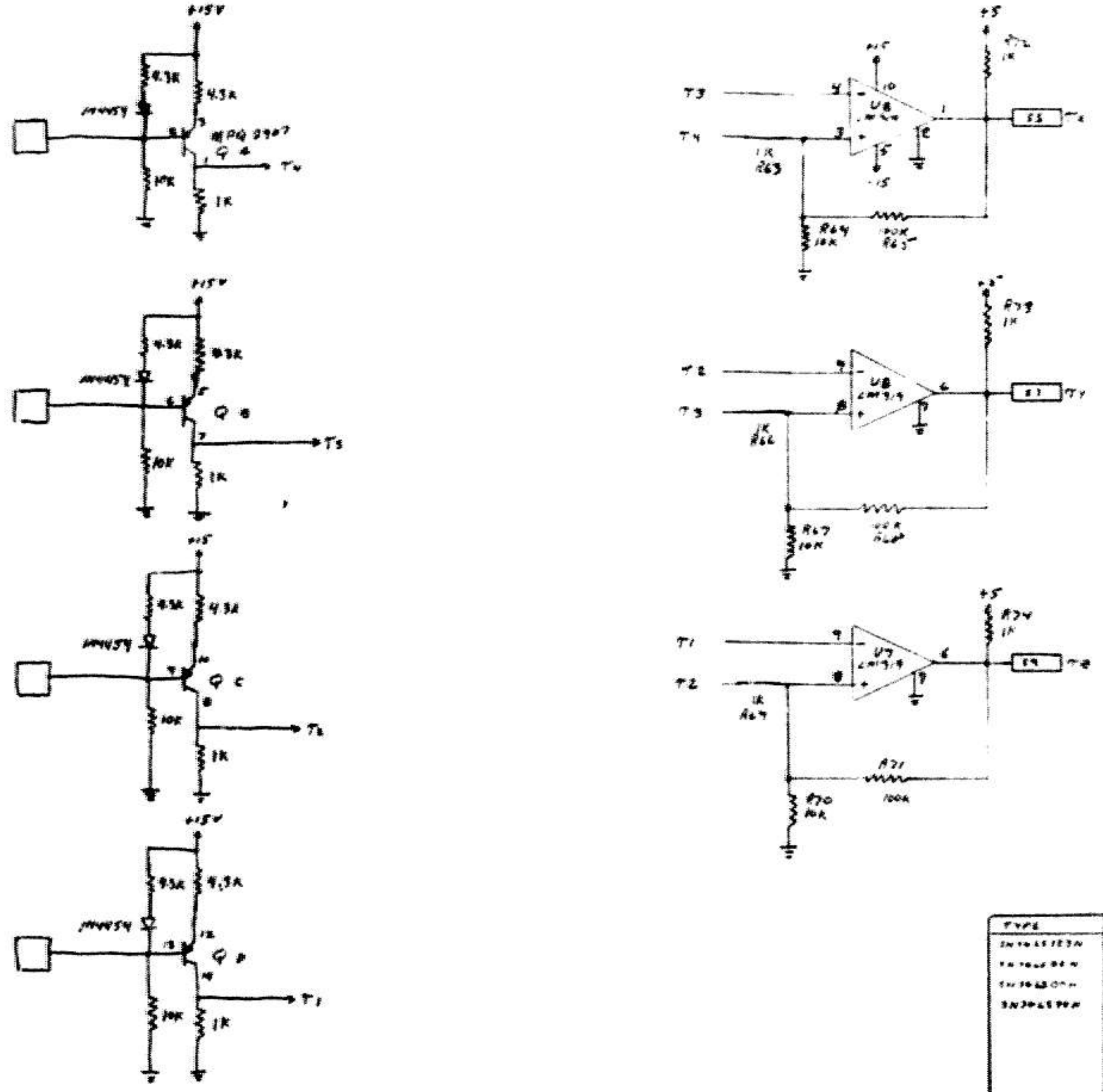

TYPE	REF'S
SN74LS123N	U17
[illegible]	U18
[illegible]	U19
SN74LS74N	U21

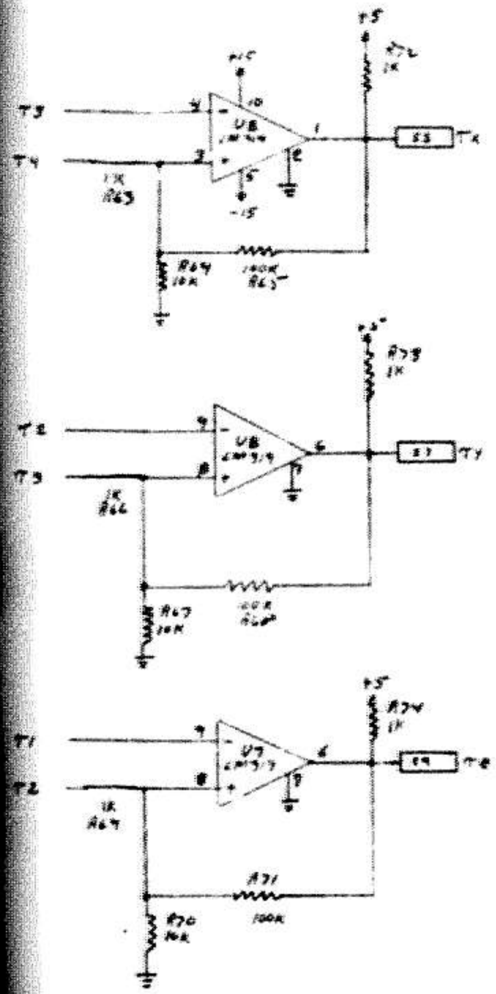

TYPE	REFS	+5V	GND
SN74LS123N	U17	16	8
[illegible]	U18	14	7
SN74LS00N	U19	14	7
SN74LS74N	U21	14	7

GS SYSTEMS

D 53597 300279

A.1.14 DOT-CCD Label Decoder A

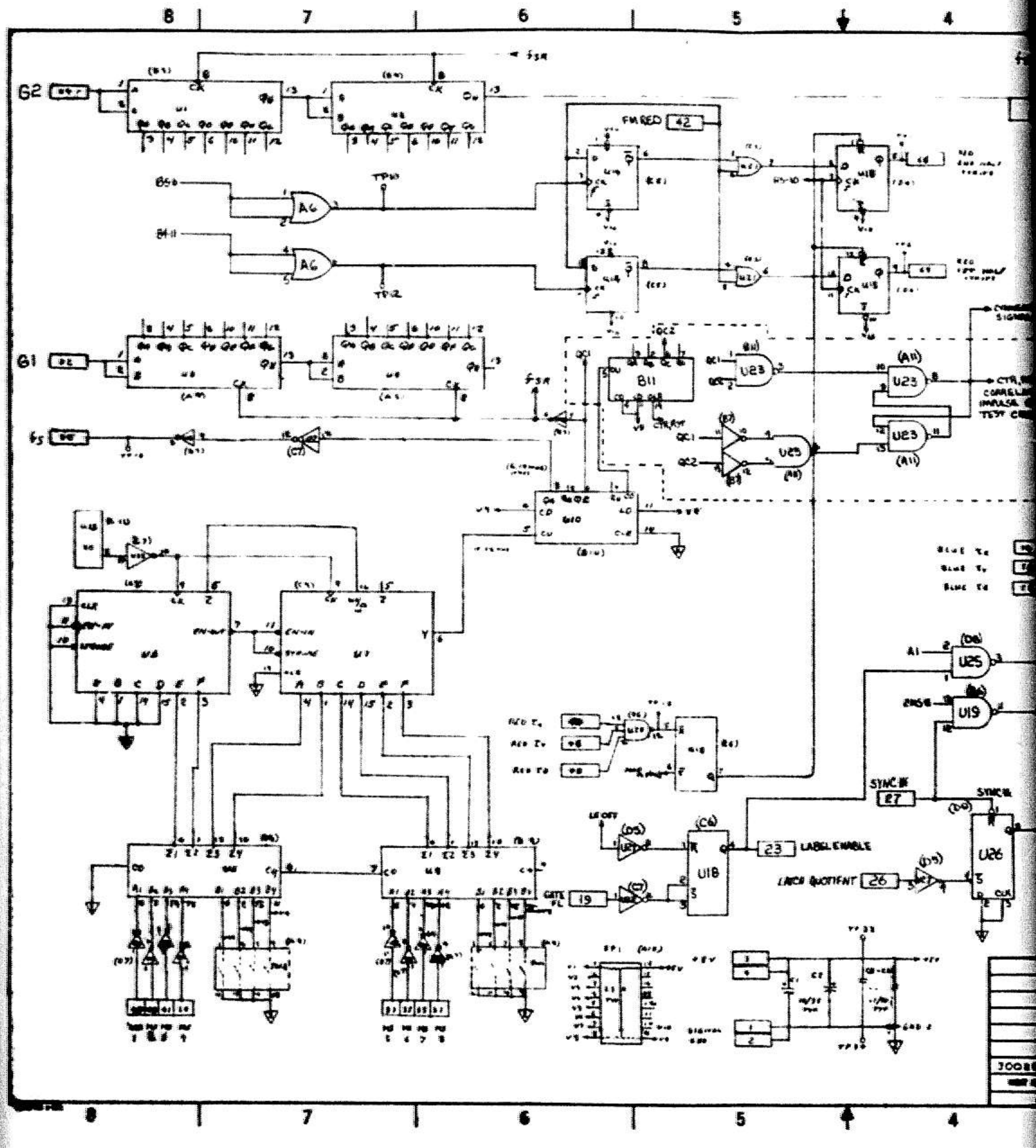
8
7
6
5
4
G2
G1
fSR
fS
CK
U1
U2
U3
U4
FM RED
42
B5
B11
A6
TP10
TP12
U14
U15
U18
QC1
QC2
B11
U23
U25
(A11)
CTR
CORREL
IMPULSE
TEST
U10
U8
U7
Z
CK
EN-IN
EN-OUT
STROBE
A B C D E F
Y
RED
U13
BLUE
A1
U25
(D6)
ENSE
U19
SYNC IF
27
SYNC IL
(D9)
U26
LE OFF
(D5)
(C6)
U18
R
Q
S
23
LABEL ENABLE
GATE
FL
19
(C7)
LATCH QUOTIENT
26
(D5)
S
CLK
CD
Z1 Z2 Z3 Z4
B1 B2 B3 B4
A1 A2 A3 A4
+5V
1
2
3
4
300

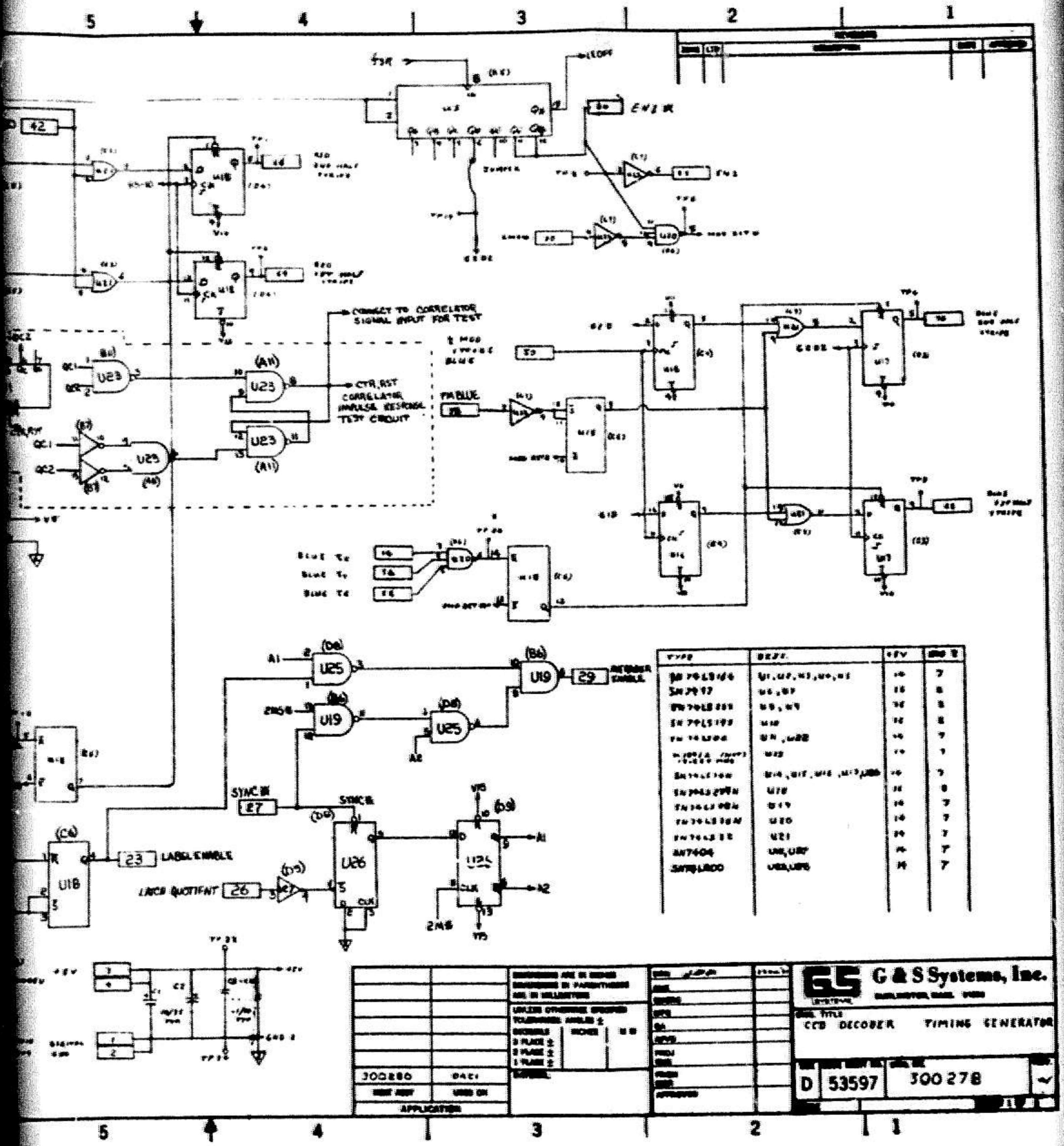

A.1.15 CCD Decoder-Timing Generator

NOTES
1. DENOTES OUTPUT PINS ☐
2. DENOTES BOARD LOCATION ( )
3. 300286 A6

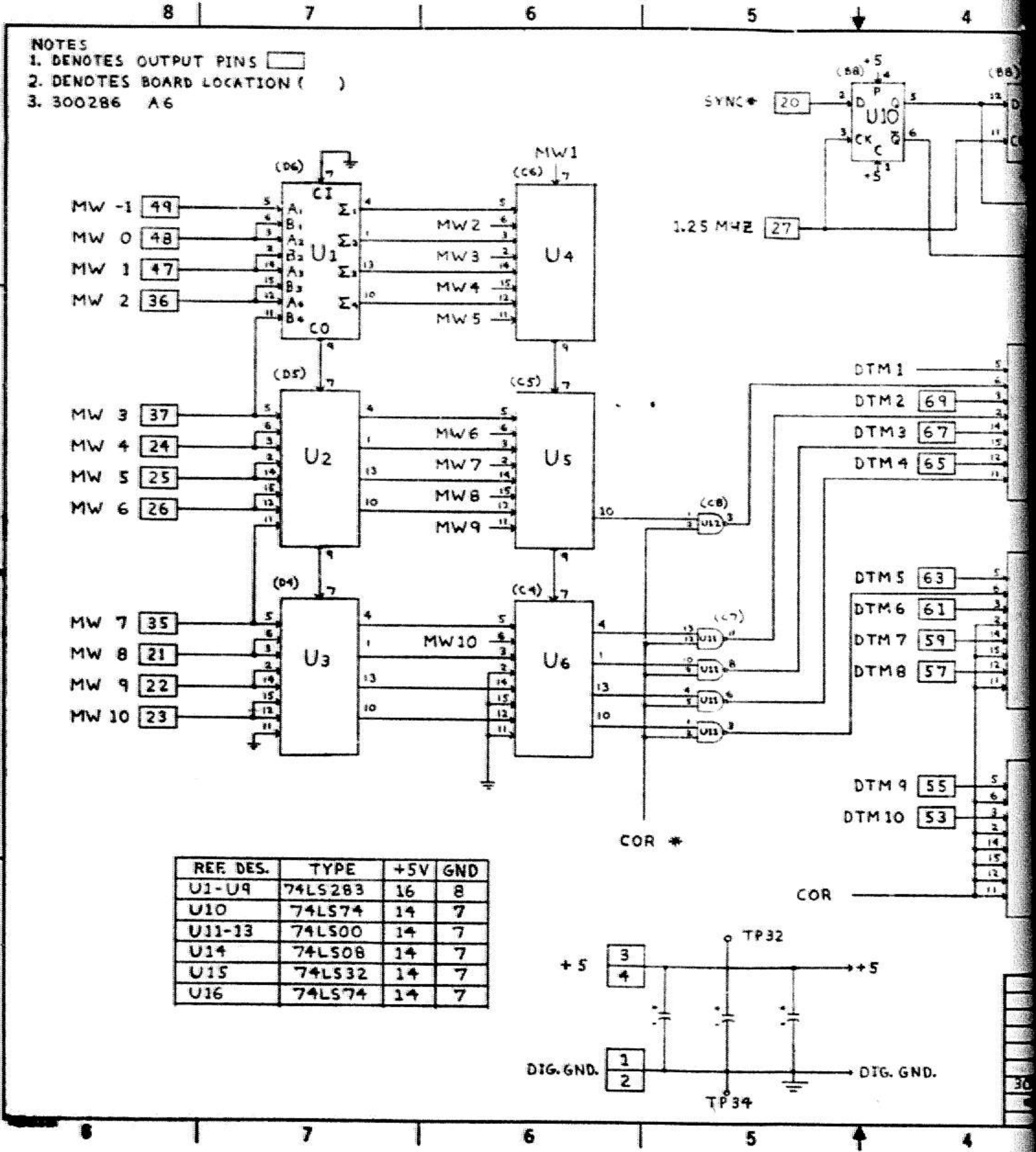

REF. DES.	TYPE	+5V	GND
U1-U9	74LS283	16	8
U10	74LS74	14	7
U11-13	74LS00	14	7
U14	74LS08	14	7
U15	74LS32	14	7
U16	74LS74	14	7

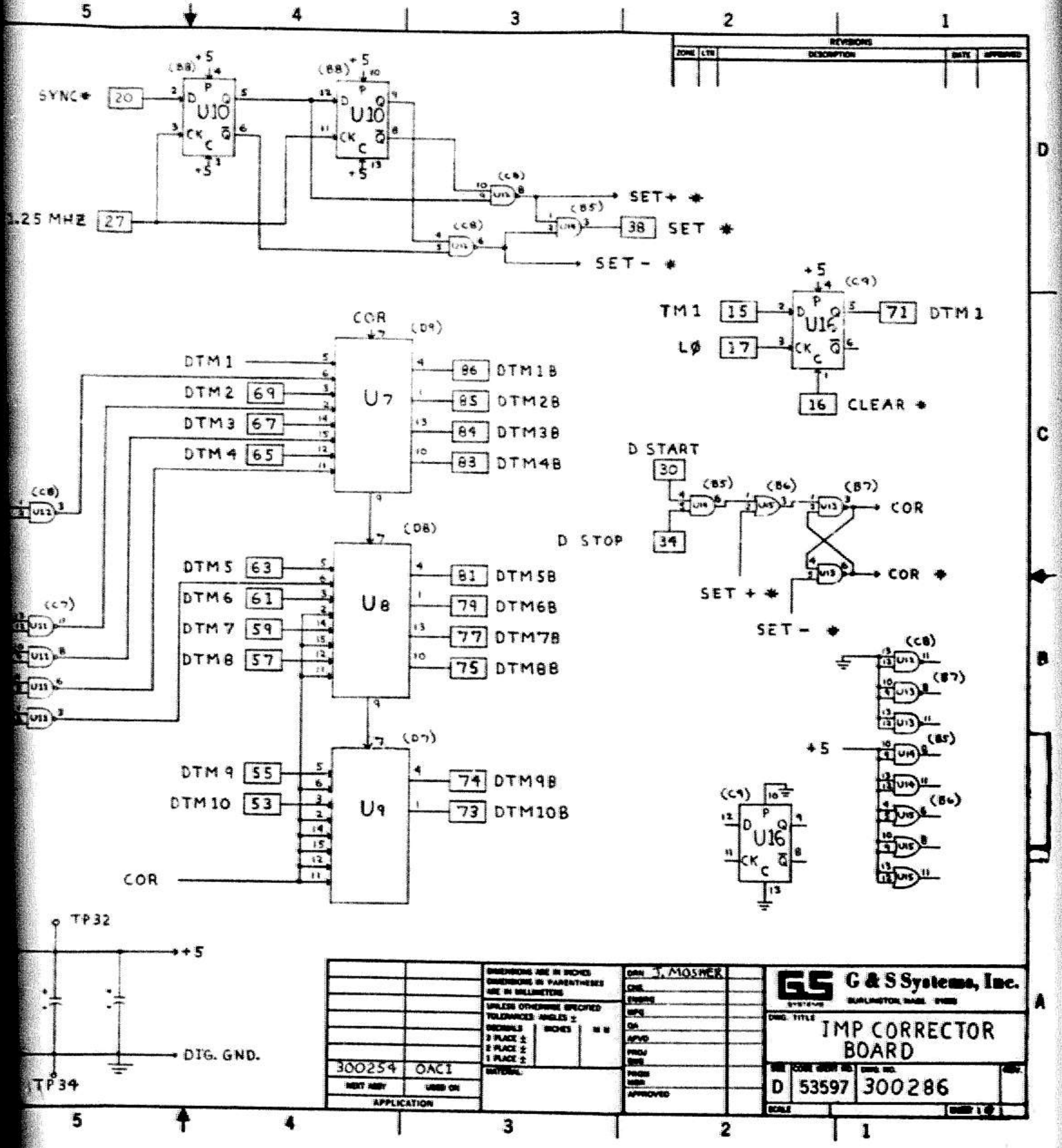

A.1.16 IMP Corrector Board

A.2 Z80-MCB AND CPU DATA SHEETS

Z80-MCB Microcomputer Board

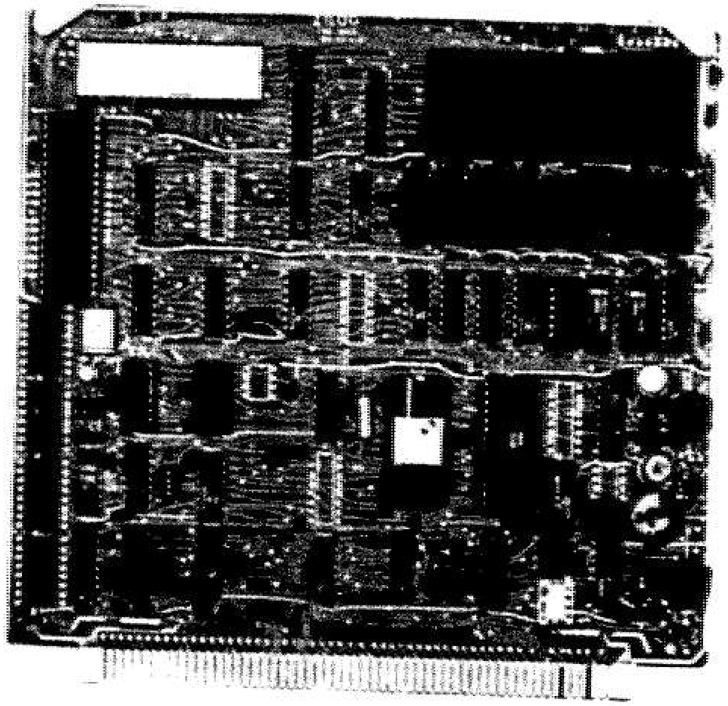

The Z80-MCB Microcomputer Board is designed to operate as a complete single board computer including its own self-contained memory plus serial and parallel I/O ports. It features the use of Z80-CPU, Z80-CTC and Z80-PIO devices that have become standard of the microcomputer industry.

The MCB features the largest instruction set available and is designed to operate on a single 5-volt supply.

Features

- Z80-CPU single chip n-channel processor with 158 instructions (including all of the 8080A's and 8085's 78 instructions for total software compatibility). (See Z80-CPU Product Specification for additional details)
- 4K bytes of high speed, low power dynamic RAM.
- Strapping option available to allow the use of 16K X 1 dynamic RAM's in place of 4K X 1 RAM's presently installed.
- Capacity for 4K bytes of EPROM, PROM or masked ROM for user's program storage. Zilog monitor system firmware is available in 1K and 3K byte versions.
- Programmable full duplex serial I/O port with RS-232 or current loop interface. 14 separate BAUD rates from 50 BAUD to 38.4K BAUD.
- Bus drivers are provided for memory and I/O expansion to other boards included in this series.
- Universal parallel I/O can be programmed to define any direction and data-transfer characteristics for two 8-bit ports. Data transfer can be accomplished under full interrupt control.
- 19.6608 MHz crystal oscillator divided to 2.457 MHz for Z80-CPU operation and dividable by Z80-CTC for programmable BAUD rate generation.
- Monitor system firmware has terminal handler, set and display memory and register commands, breakpoints and floppy disk controller.

Specifications

Memory Capacity: 4K Bytes Dynamic RAM plus up to 4K bytes PROM, ROM or EPROM.

Expandable by use of Z80-RMB 16K RAM boards to 64K bytes of memory or with 16K RAM's.

I/O Channels: Serial I/O port with RS-232 or 20 MA current loop interface.

Two (2) software configurable bidirectional 8-bit parallel I/O ports.

Expansion: The MCB is bus compatible with all other boards in the series. Expansion of more I/O or memory is simply completed through the backplane being used.

A.3 CRITICAL COMPONENT DATA SHEET

A.3.1 Xenon Illuminator Arc and Supply Data Sheets

varian

XENON ILLUMINATOR

NEW PRODUCT BULLETIN

VIX-150

FEATURES

- Approximately 1 watt of UV (200-400 nm) output
- 1500 lumens or 6 watts of visible radiation (6000°K color temperature)
- Over 12 watts of IR (800-2100 nm) radiation
- Safety — sapphire window and ceramic body
- Optically prealigned

DESCRIPTION

The VIX-150 is a miniature, integral-reflector, high-pressure, short-arc xenon illuminator. It is a convenient, compact source of high-intensity, broadband illumination covering the UV, visible, and IR regions of the electromagnetic spectrum. This 150-watt illuminator is ideal for use in clinical, laboratory, photographic, research and manufacturing applications requiring a reliable source of high-intensity radiation.

The arc output is collimated by an integral parabolic reflector and emerges through a 25 mm diameter sapphire window which has excellent transmission from the UV through the IR portions of the xenon arc spectrum. The sapphire window is not subject to the devitrification phenomenon which often limits useful life in conventional xenon arc lamps.

Its small size and rugged ceramic/metal construction make the VIX-150 especially suitable for use in equipment requiring a small size, high-reliability illuminator. Since the VIX-150 is optically prealigned at the factory, installation and replacement of the VIX-150 are extremely simple.

Varian offers matched power supplies, holders, and other optical accessories to assist the equipment designer in interfacing the illuminator with other system components to effectively illuminate slits, apertures, or large surfaces.

3206 1/76

Printed in U.S.A.

varian/eimac division/301 industrial way/san carlos/california 94070

ADVANCED TECHNOLOGY APPLICATIONS CORPORATION

25A xenon short-arc power supplies

Advanced Technology Applications Corporation (ATAC) has developped the 25 A 1 range of switching power supplies which is optimized for 300 W VARIAN/EIMAC high intensity ceramic-body short-arc Xenon lamps with built-in mirror.

These power supplies are also suitable for most other Xenon short-lamps available on the market for audio-visual and other applications with a maximum operating current capability of 20 to 24 amps depending upon lamps characteristics.

The power supply is built around a custom integrated circuit performing all the basic electrical functions and required sensing and protections, therefore offering a unique combination of price, performance and size.

The small size of these power supplies greatly simplifies the integration into new or existing equipment. OEM variations are considered for production quantities.

Care has been exercized to reduce interferences from audio to RF; new design of trigger circuit combined with power coaxial cord to the lamp and extensive shielding prevent accidental destruction of sensitive surrounding electronic circuitry as well as influencing the audio section of the projector when any.

Three basic models are offered

1) Self-starting power supply designed for continuous operation at a fixed output current adjustable between approximately 10 and 25 A REF 25 A1 CONT

2) Self-starting power supply with light dimming capability. Output current can be gradually adjusted from remote control between the nominal lamp current giving the maximum light output and a simmer current still keeping the arc alive and giving the minimum light output. Maximum and simmer currents are both internally adjustable to match lamp characteristics; light output ratio can exceed 20 : 1 with most lamps with negligible color temperature shift REF 25 A1 GRAD

3) Self-starting power supply suitable for shutterless operation. The power supply is modulated by a signal which frequency and duty cycle are choosen in order to behave like a 2 or 3 blades shutter of appropriate transparency. Maximum and simmer currents are both internally adjustable to match lamp characteristics. Proprietary design of circuitry makes pratical shutter less operation with no significant change in both color temperature and tits trend on the lamp.
REF 25 A1 MOD

Each model can be supplied with the following options

(i) remote starting by a low level dc signal

(ii) safety circuit sensing lamp failure to start and/or to stay alive on simmer current with remote indication.

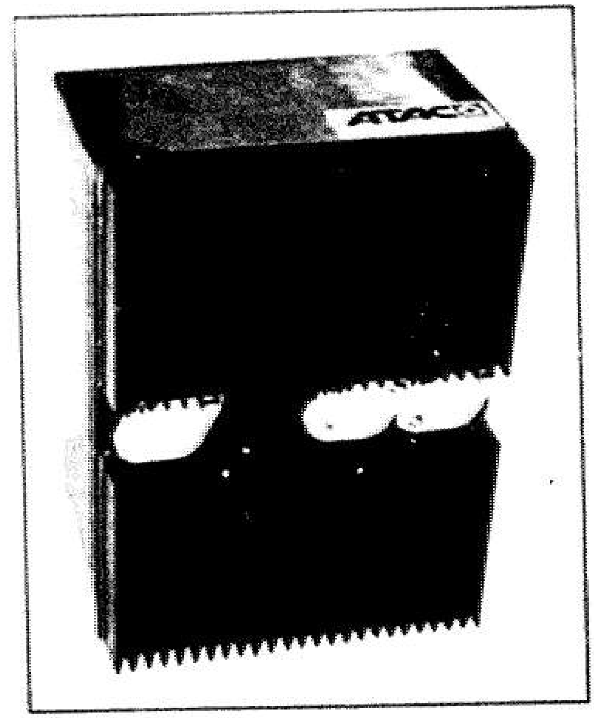

Tehnical specifications

Input characteristics

- input voltage : dual range 100 to 130 v; 190 to 250 v
- input frequency : 50 to 60 Hz single phase
- efficiency : 70 to 85 % depending upon temperature and input voltage
- power factor : close to 1

This unit also operates on 140 to 170 v and 250 to 350 v DC any polarity.

400 Hz version available upon request.

Output characteristics

- output voltage : 12 to 20 v (self adjusting on lamp beeing operated)
- output current : adjustable from about 10 to 25 A
- output power : constant power type of power supply factory adjusted to deliver 300 W (23 A on a 13 V lamps)

Power capability increases with voltage.

- power ripple : 1 % typical
- current ripple : 3 to 10 % depending upon lamp characteristics
- output polarity : positive or negative ground (accessible internal wiring).

A.3.2 Photomultiplier Tube Data Sheets

HTV PHOTOSENSITIVE DEVICES

HTV-931A

PHOTOMULTIPLIER TUBE

3000 to 6500 Å RESPONSE

General - Purpose applications

March 1966 **TECHNICAL DATA SHEET**

Hysteresis Free, 9 - Stage, Side - On Type
with S - 4 Spectral Response

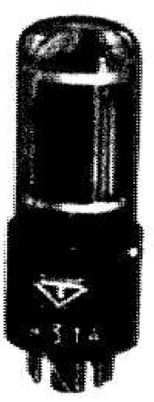

2 / 3 size

DESCRIPTION

HTV 931A is a 9 stage side on type photomultiplier tube having a cesium - antimony (Sb Cs) photocathode S 4 type. Especially the new improved electrodes have been designed to be "Hysteresis Free" to offer better operating stability. It is suited for use in general applications, such as light-operated relay, X-radiation exposure control and facsimile transmission. It is similar to type 1P21 but intend for applications having relaxed dark current and minimum sensitivity requirements.

The spectral response of the HTV 931A covers the range from about 3000 to 6500 angstroms as shown in Fig 4. Maximum response occurs at approximately 4000 angstroms. The 931A therefore has high sensitivity to blue and less sensitivity in the red regions of visible spectrum.

The outline and base connection are the same as the R106, R132, R136, R156, R196, R212, R213, 1P21, 1P22 and 1P28.

DATA

GENERAL:

Spectral Response	S 4 (See Fig 4)
Wavelength of Maximum Response	4000 ± 500 angstroms
Spectral Response Range	3000 to 6500 angstroms
Direct Interelectrode Capacitances (approx.)	
Anode to dynode No.9	4 pF
Anode to all other electrodes	6 pF
Outline Basing Diagram	See Fig 1
Length from Base Seat to Center of Useful Cathode Area	19.0 ± 2.5 mm
Operating position	any
Net Weight (approx.)	44 gr

MAXIMUM RATINGS, *Absolute Maximum Values*

SUPPLY VOLTAGE BETWEEN ANODE AND CATHODE	1250 volts dc
SUPPLY VOLTAGE BETWEEN ANODE AND DYNODE No.9	250 volts dc
AVERAGE ANODE CURRENT (Note ① ②)	1 ma
AMBIENT TEMPERATURE RANGE	-80 to + 75 °C

CHARACTERISTICS:

Under condition with dc supply voltage (E) across a voltage divider providing 1/10 of E between cathode and dynode No.1, 1/10 of E for each succeeding dynode stage, and 1/10 of E between dynode No.9 and anode. With E = 1000 volts dc (except as noted below)

Sensitivity	Min	Medium	Max	
Anode Luminous at 0 cps (Note ③)	20	100		amp/ lm
Cathode Luminous (Note ④)		30		µa/ lm
Current Amplification		3.3 × 10[illegible]		
Equivalent Anode Dark Current Input (Note ⑤)			2.5 × 10[illegible]	lm
Anode Dark Current (at 1000 volts dc)			0.5 × 10[illegible]	amp
Anode Current Stability Hysteresis (Note [illegible])			1	%

◆◆◆◆◆◆◆◆◆◆◆◆◆◆◆◆◆◆◆◆

NOTES

① Averaged over any interval of 30 seconds maximum.

② When maximum stability is required, the anode current should not exceed 1 microampere.

③ Under the following conditions: The light source is a tungsten filament lamp operated at a color temperature of 2870°K. A light input of 10 microlumens is used. The load resistor has a value of 0.01 megohm.

④ For conditions the same as shown above (Note ③) except that the value of light flux is 0.01 lumen and 100 volts are applied between cathode and all other electrodes connected together as anode.

⑤ Measured at a tube temperature of 25 °C and with the supply voltage (E) adjusted to give an anode luminous sensitivity of 20 amperes per lumen.

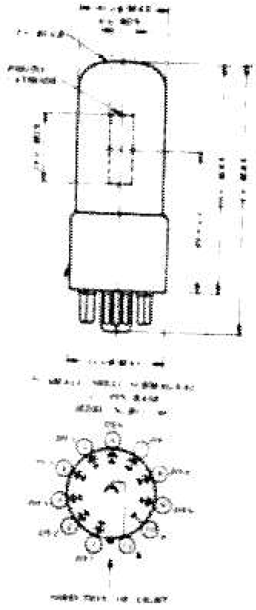

FIG. 1
DIMENSIONAL OUTLINE AND BASING DIAGRAMS—DIMENSIONS IN MILLIMETER

Form No. 1005

HAMAMATSU TV CO., LTD.

PHOTON IS OUR BUSINESS

TABLE 15. PHYSICAL CHARACTERISTICS OF HAMAMATSU TV CO. TYPE R777 PHOTOMULTIPLIER TUBE AT 25°C AND SPECIFIED SUPPLY VOLTAGE

CHARACTERISTIC	VALUE
Size (mm)	28
Features	For He-Ne laser
Spectral response (nm)	185-850
Wavelength of maximum response (nm)	530
Number of stages	9
Window material	UV-glass
Photocathode material	multialkali
Maximum ratings:	
anode to cathode voltage (VDC)	1250
anode current (mA)	0.1
anode to last dynode voltage (VDC)	250
Cathode Sensitivity	
minimum luminous sensitivity (μA/Lm)	140
typical luminous sensitivity (μA/Lm)	170
typical red and white light (sensitivity ratio)	.15
Anode to Cathode Voltage (VDC)	1000
Anode Sensitivity:	
minimum luminous sensitivity (A/Lm)	300
typical luminous sensitivity (A/Lm)	700
Anode Dark Current	
typical A (nA)	2
typical B (nA)	5
maximum B (nA)	50

TABLE 15. PHYSICAL CHARACTERISTICS OF HAMAMATSU TV CO. TYPE R777 PHOTOMULTIPLIER TUBE AT 25°C AND SPECIFIED SUPPLY VOLTAGE (CONT'D)

CHARACTERISTIC	VALUE
Typical Anode Radiant Sensitivity:	
253.7 nm (A/W)	1.2×10^5
632.8 nm (A/W)	1.3×10^5
852.1 nm (A/W)	1.1×10^3
maximum response (A/W)	2.1×10^5
Current amplification (typical values)	4.1×10^6
Direct Interelectrode Capacitances	
anode to last dynode (pF)	4
anode to all other electrodes (pF)	6
Typical rise time (ns)	2.6

A.3.3 Delay Line Data Sheet

RETICON® PRODUCT SUMMARY · DISCRETE TIME ANALOG SIGNAL PROCESSING DEVICES

Reticon offers a broad line of integrated circuits which can be used to perform analog signal processing functions. All of these devices function in the discrete-time domain by storing samples of the input signal in an analog memory as packets of charge. These analog samples are then manipulated to produce such operations as delay, multiplication and addition. This results in devices which can perform such functions as frequency changing, filtering, correlation, and Fourier transforming.

There are two basic categories of devices based on the way in which the analog samples are handled. In the *Charge Transfer Devices* **(CTD)** each sample of charge is transferred from stage to stage across the chip under the control of a sequence of clock pulses. There are two types of these multiple transfer devices, *Bucket Brigade Devices* **(BBD)** and *Charge Coupled Devices* **(CCD)**. The differences between them are primarily in the details of the device structure. From the functional point of view BBD's offer a way to make practical tapped analog delay lines for such applications as correlators and externally programmable transversal filters. The CCD technology is capable of higher sampling rates and higher density devices. These include such devices as the video delay and the 512 point transversal filters.

The second major category is *Single Transfer Devices* **(STD)**. These devices are similar to an integrated set of multiplexed sample-and-holds. Each successive sample is stored in a separate discrete memory cell, where it stays until it is read out. These devices have applications as video delays, data buffers, and time base correctors. They don't have the problem of transfer inefficiency of CTD's because of the single transfer but have performance limitations associated with fixed-pattern and clocking noise.

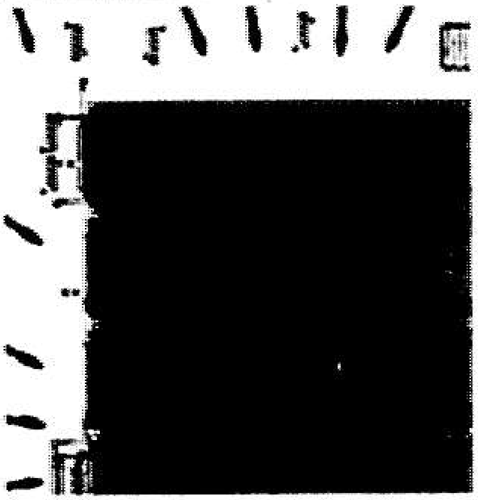

Photomicrograph of quad CCD filter R5601-2 used to produce the power spectrum density of two sine waves at 10 and 20 KHz shown superimposed on the integrated circuit.

CHARGE TRANSFER DEVICES (CTD)

The concept of a CTD is to store a sample of analog information as a packet of charge on a capacitor and then under the control of a clock to transfer it to the next storage site. A simple analogy can be made to a two-phase water bucket-brigade shown in Figure 1.

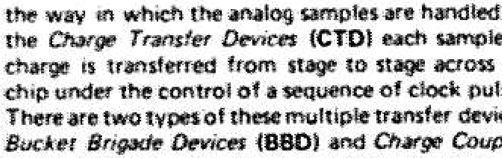

Figure 1. Analogy of Charge Transfer Device

From this simple model, several device features can be seen. First, since in one phase the input is being filled and in the other it is being transferred, the device is sampling the input data signal. If nothing is done at the output, the signal is present for a half clock cycle and the other half cycle the output comes to a reference level.

The key parameter for a CTD is the transfer inefficiency (ϵ). The charge transfer inefficiency is the fraction of charge left behind on each transfer. If one bucket containing 10,000 electrons is dumped into the next bucket, and it leaves behind a single electron, then $\epsilon = 1 \times 10^{-4}$. Since the same fraction is left behind each time a transfer is made then for an entire device the total inefficiency in $n\epsilon$, where n is the number of transfers. The effect of this on a sine wave input is similar to that of a low pass filter. The quantitative results are the amplitude attenuation:

$$A_{out}/A_{in} = \exp\left[-n\epsilon\left(1-\cos 2\pi f/f_c\right)\right]$$

where f is the input frequency (always less than the Nyquist frequency, $f_c/2$) and f_c is the sample rate. The additional phase delay over over the expected ideal value is:

$$\Delta\phi = n\epsilon \sin\left(2\pi f/f_c\right)$$

The transfer inefficiency is determined by device parameters which determine the time required for the charge to transfer from one bucket to the next. If the clock frequency is continually increased, a point is reached where insufficient time is allowed for all the charge to transfer.

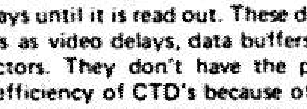

Figure 2. Charge transfer inefficiency versus clock frequency

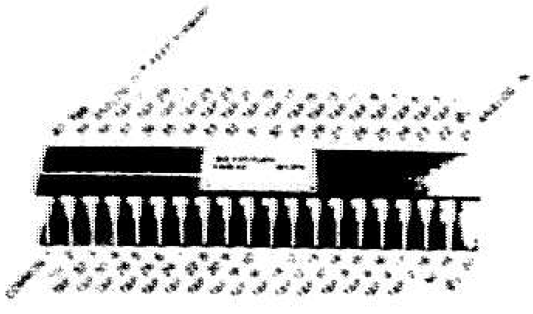

KEY FEATURES

- Monolithic construction
- Full wave or boxcar output from each tap
- 32 equally spaced taps, with separate feed-forward tap
- Buffered outputs from each tap
- Tap delay linearly variable with clock period
- Sampling rates to 5 MHz
- 40 db passband-to-stopband ratio (as a filter)
- 60 db dynamic range
- Simple I/O and clock circuit
- Low power dissipation
- 40-pin dual-in-line package

The Reticon TAD-32 is a tapped analog delay line fabricated with the most advanced n-channel silicon-gate integrated-circuit technology. It consists of a charge-transfer device with 32 taps equally spaced one sample-time apart along the device. It is designed specifically for use in the realization of transversal filters, but it likewise is applicable to recursive or other filter types. Typical applications include: low pass filters, band pass filters, matched filters, phase equalizers, phase shifters, tone generators, function generators, correlators, and simple tapped delays.

GENERAL DESCRIPTION

TAD-32 is a 32-stage charge-transfer device which permits the storage of analog signals with recovery of the signals at multiple separate outputs at successive delay times later. The taps on each stage are brought to the outside through buffer amplifiers. Each buffer amplifier output appears as a source follower, thus permitting variable loading of the taps in order to create various tap-weight functions. The taps are spaced one sample time apart along the delay. An additional special feed-forward output tap is provided so that multiple devices may be cascaded without causing discontinuity in the spacing of the taps from one device to the next. With this arrangement, timing integrity is maintained. The ability to cascade devices permits the user to build processors (such as transversal filters) with more than 32 taps.

[illegible]

The equivalent circuit is shown in Fig. 1. Samples are set up on the initial storage node during the time period when the $Ø_1$ clock waveform is at its high (positive) level. When $Ø_1$ drops, the sample value is frozen and the simultaneous rise of $Ø_2$ permits exchange of charge with the tap-1 node, similarly for other nodes. The sample values thus first appear at the various tap outputs when $Ø_2$ rises. When $Ø_2$ falls and $Ø_1$ rises, the charge state is transferred to the second node for each tap. The paralleling of the buffer outputs thus maintains the output value at the tap for both halves of the clock period. The resulting output is a full-wave (or full-period) output. Further, there is one sample time delay between the samples as they appear at successive output taps. The last node supplies a feed-forward tap at the proper time to provide the set-up signal for another, series-connected TAD-32, so that multiple-section processors with more than 32 taps can be implemented. Clocking of the second device must be synchronous with the first, i.e., $Ø_{1A} = Ø_{1B}$

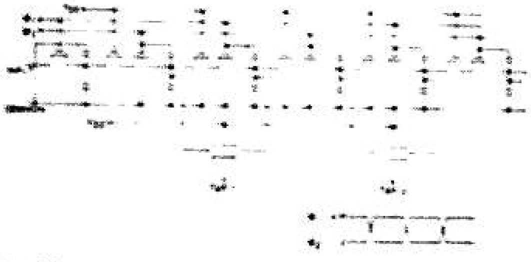

Figure 1. A tapped analog delay line made using metal-oxide-silicon integrated circuit technology

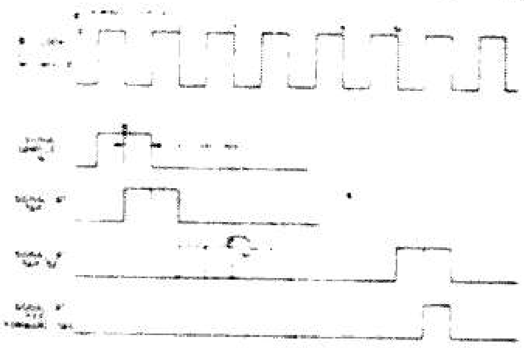

Figure 2. Relative timing diagram

The device is capable of sampling rates from below 1KHz to more than 5 MHz. This capability permits the translation of a given filter characteristic over a range of more than three orders of magnitude in frequency simply by varying the clock rate. A two-phase complementary square-wave clock with amplitude in the range of 12 to 15 volts is required to drive the device. The clock phases are positive square waves, as shown in the inset of Fig. 1 and in more detail in Fig. 2. The clocks drive the nodes positive, thus providing a positive output with reference to ground at each tap. The output from each tap is a full-wave or boxcar output, as discussed above; no additional filtering is necessary before summing with the desired weights. The summing amplifiers can combine the summing and filtering functions.

APPENDIX B
TEST RESULTS

Table 14 in Section 4.4 presents results from one of the test runs made during the extensive laboratory comparison between the manufacturer's present scanner and the Phase II modified scanner. Additional test runs are presented in this appendix, all of which show significant readability gains using the modified scanner.

Each scanner configuration used in the testing is identified. The manufacturer's present scanner is scanner #2. The other scanner incorporates (for the test series from which the results were obtained) that set of modifications associated in Figure 45 with that scanner modification number. Some tests were conducted at close range (Near Field), medium range (Median Field), and at far range (Far Field). Appropriate FM values are given in Table 16 for the various test ranges.

TABLE 16: FIGURE OF MERIT

NO.	NEAR FIELD		MED FIELD		FAR FIELD	
	LABEL NO.	FM	LABEL NO.	FM	LABEL NO.	FM
1	1	20.110	1	17.930	1	13.430
2	2	19.690	2	17.180	2	13.020
3	3	9.186	3	4.230	3	4.090
4	5	5.120	7	3.650	4	3.050
5	7	5.040	4	3.270	7	2.690
6	4	4.740	5	2.780	5	2.140
7	6	3.300	6	1.936	6	1.650
8	8	3.260	8	1.820	8	1.600
9	9	1.940	9	1.733	19	1.140
10	19	1.867	19	1.360	9	1.020
11	12	1.607	11	1.230	11	0.769
12	11	1.530	12	0.986	12	0.760
13	15	0.990	15	0.807	15	0.546
14	10	0.984	10	0.734	13	0.436
15	13	0.918	13	0.647	10	0.486
16	14	0.518	14	0.514	14	0.315
17	17	0.437	16	0.343	16	0.238
18	20	0.371	17	0.312	17	0.213
19	16	0.315	20	0.239	18	0.203
20	18	0.311	18	0.202	20	0.146
21	23	0.296	23	0.175	31	0.115
22	40	0.256	24	0.155	24	0.099
23	24	0.225	21	0.149	23	0.089
24	31	0.204	40	0.149	30	0.086
25	29	0.203	31	0.149	40	0.083
26	21	0.198	25	0.145	21	0.082
27	25	0.185	30	0.138	25	0.076
28	32	0.182	28	0.105	28	0.073
29	28	0.173	26	0.095	26	0.062
30	36	0.173	32	0.085	29	0.061
31	39	0.153	29	0.075	22	0.049
32	30	0.149	36	0.074	32	0.044
33	26	0.143	33	0.070	33	0.039
34	42	0.128	39	0.062	39	0.039
35	33	0.124	27	0.056	42	0.030
36	22	0.095	35	0.054	36	0.028
37	43	0.038	42	0.048	27	0.026
38	48	0.083	22	0.040	51	0.024
39	27	0.071	43	0.037	43	0.023
40	37	0.067	38	0.034	46	0.023
41	38	0.067	48	0.032	34	0.019
42	34	0.062	34	0.028	54	0.018

TABLE 16: FIGURE OF MERIT (Continued)

NO.	NEAR FIELD		MED FIELD		FAR FIELD	
	LABEL NO.	FM	LABEL NO.	FM	LABEL NO.	FM
43	35	0.060	46	0.026	47	0.018
44	46	0.059	49	0.025	48	0.018
45	45	0.046	45	0.021	41	0.018
46	41	0.044	41	0.020	35	0.017
47	49	0.041	50	0.019	38	0.016
48	47	0.039	44	0.017	44	0.013
49	44	0.037	51	0.015	37	0.013
50	53	0.035	37	0.013	45	0.011
51	50	0.031	54	0.012	49	0.010
52	51	0.027	47	0.011	53	0.009

TEST 1

	Near field @ 5 mph		Near field @ 30 mph	
	Scanner #2	Scanner #4	Scanner #2	Scanner #4
Number Labels Read	35.3	40.6	31.1	31.9
Corresponding FM	0.114	0.067	0.153	0.149
Readability	88.6%	93.3%	84.7%	85.1%
Readability Improvement	4.7%		0.4%	

TEST 2

	Far field @ 5 mph	
	Scanner #2	Scanner #4
Number Labels Read	16.5	27
Corresponding FM	0.276	.076
Readability	72.4%	92.4%
Readability Improvement	20%	

TEST 3

	Near field @ 5 mph		Near field @ 30 mph	
	Scanner #2	Scanner #5'	Scanner #2	Scanner #5'
Number Labels Read	38-1/4	40	35-3/4	36-1/2
Corresponding FM	.083	.067	.103	.089
Readability	91.7%	93.3%	89.7%	91.1%
Readability Improvement	1.6%		1.4%	

TEST 4

	Median field @ 5 mph		Median field @ 30 mph	
	Scanner #2	Scanner #5'	Scanner #2	Scanner #5'
Number Labels Read	31-1/4	38-3/4	29-3/4	31-1/4
Corresponding FM	.075	.038	.088	.075
Readability	92.5%	96.2%	91.2%	92.5%
Readability Improvement	3.7%		1.3%	

TEST 5

	Far field @ 5 mph		Far field @ 30 mph	
	Scanner #2	Scanner #5'	Scanner #2	Scanner #5'
Number Labels Read	23	25-3/4	21-1/4	22-3/4
Corresponding FM	.089	.082	.112	.091
Readability	91.1%	91.8%	88.8%	90.9%
Readability Improvement	0.7%		2.1%	

TEST 6

	Median field @ 5 mph	
	Scanner #2	Scanner #6
Number Labels Read	27-3/4	40-1/2
Corresponding FM	.113	.033
Readability	88.7%	96.7%
Readability Improvement	8.0%	

TEST 7

	Near field @ 5 mph	
	Scanner #2	Scanner #7
Number Labels Read	34-1/2	38-1/2
Corresponding FM	.126	.077
Readability	87.4%	92.3%
Readability Improvement	4.9%	

TEST 8

	Median field @ 5 mph	
	Scanner #2	Scanner #8
Number Labels Read	28	40-1/4
Corresponding FM	.105	.034
Readability	89.5%	96.6%
Readability Improvement	7.1%	

TEST 9

	Near field @ 5 mph	
	Scanner #2	Scanner #9
Number Labels Read	31	39
Corresponding FM	.153	.078
Readability	84.7%	92.2%
Readability Improvement	8.2%	

TEST 10

	Median field @ 5 mph	
	Scanner #2	Scanner #9
Number Labels Read	28-3/4	38-1/2
Corresponding FM	.097	.038
Readability	90.25%	96.2%
Readability Improvement	5.95%	

TEST 11

	Far field @ 5 mph	
	Scanner #2	Scanner #9
Number Labels Read	19	24-3/4
Corresponding FM	.203	.084
Readability	79.7%	91.6%
Readability Improvement	11.9%	

TEST 12

	Near field @ 5 mph	
	Scanner #2	Scanner #10
Number Labels Read	34	40
Corresponding FM	.128	.067
Readability	87.2%	93.3%
Readability Improvement	6.1%	

TEST 13

	Far field @ 5 mph	
	Scanner #2	Scanner #10
Number Labels Read	20	36
Corresponding FM	.146	.028
Readability	85.4%	97.2%
Readability Improvement	11.8%	

APPENDIX C
OPERATIONAL SOFTWARE

A INTRODUCTION

This appendix describes the software used in the OACI Post Detection Processor (PDP). It includes a discussion of algorithms, descriptions of the various parts of the program, and programming considerations.

System Overview

The Post Detection Processor is a Z80 based microcomputer system consisting of a Zilog MCB Single board computer, a Zilog RMB 16K RAM/ROM board, and an auxiliary I/O board designed especially for this application. The system contains 4K of EPROM in low memory at locations '000' to 'FFF' and 20K of RAM from '1000' to '5FFF'. Program code resides in the 4K of EPROM (slightly over 3K is actually used) and the program utilizes about 6K of the RAM for data storage.

Data enters the PDP through two parallel ports on the MCB. Output is to TTY (60 mil loop and/or RS232) through a USART. The only external control available to the user is a reset function.

The program code was developed on a MICROKIT 8/16 system with 40K of main memory using the Quickrun/Z80 (version 1.2) software package. Source code exists in four modules on four cassette tapes, one for each of the necessary EPROMs. Each tape contains two copies of the code for its module, one on each side. The listings are included in Section III.E of this appendix.

B Software Design

Two important considerations in the software design were the timing of data input and the nature and quality of the data. Since a train, car, or label could occur at any time, a interrupt driven input and control design was selected. Label data input and initial processing are done in a single routine which services scanner system interrupts. Control signals are input to a second routine which reads the control register each time a status change occurs.

B.1 Data Quality

From previous testing, it was found that label data fall into three categories: (a) good data where each scan correctly reads each module, (b) marginal data where one or modules in a label is in error, but where correlated scans produce a good label reading, and (c) labels where there is not enough data to produce a valid label reading. In addition, it was found that as a label degrades, its blue component becomes undetectable much more quickly than its red component.

These observations led to the development of a two-step label reading process. The first step is an interrupt driven input section, where from a single scan, after passing two quality thresholds, is checked for parity. If a true parity check is found, the label is considered read and goes to the PDP output buffer. If not, the label data are thresholded again and saved for further processing. The second level of processing produces a table of stripe value possibilities for each module. Those possibilities occurring at less than a specified percentage of scans are rejected, and the lists for the first four stripe positions (railroad identification) are sorted so that those stripes with the most blue are at the head of the list. The lists for the last seven stripes (car number) are sorted such that the most frequently occurring stripe is placed at the beginning of the list. Finally, any likely stripe values not actually read are added to the table and invalid modules are removed. Parity checks are then tried, starting with the most likely combination of stripes (those at the head of each list) until either a true parity check has been found or all combinations have been tried. When a stripe combination that gives a true parity check is found, the label is declared to have been read and is loaded to the output buffer. If no label parity check is found, a "no label" message is output.

B.2 Timing Considerations

There are three different time frames in which processing can be performed. In the first frame the computations are performed in the input routine itself (between successive scans of the label). Checking and thresholding are done to the extent possible to reduce the amount of processing required later. A parity check, an unpack, and three different threshold tests are applied. In the second time frame, during "car present" time between executions of the input routine, valid input scans are added to the table of stripe values formed in preparation for secondary processing. In the third processing time, between the end of one car and the start of the next, the "ptotp-label" is formed, various stripe combinations are tried, and output message is prepared.

C Program Descriptions

The source code presentation in III.D is heavily commented and should be referenced for details of the following discussions. All addresses are in hexadecimal notation.

C.1 Program Module 1

This module, residing in EPROM locations '000' to '3FF', contains the restart vector, the output routine, and the control loop (monitor).

A Reset or Power-On causes the processor to begin execution at location zero which contains a jump to the initialization section in Module 2 (see below).

The output routine outputs a single character to the USART. It is located at '20' and is called with a restart instruction to that location.

Once initialization of peripheral devices and program variables is complete, the control loop runs continuously. It is interrupted by the control register and label data service routines and is the calling point for all other processing. It controls the flow of data within the system by examining a series of semaphores and counters and calling the other routines accordingly. When it is finished with the data for one car it executes a jump back to the initialization section at the point where program variables are initialized for the next car.

The format and output driver sections, also included in Module 1, are discussed at the end of Module 4 where they occur in the program sequence.

C.2 Program Module 2

This module runs in the second EPROM from '400' to '7FF' and contains the initialization section, the label data and control register interrupt routines, the parity routine, and the unpack routine.

Two types of Module 2 initialization are performed: one time peripheral device (parallel ports A and B and USART) initilization at Power On or Reset, and program parameter setup for each car processed.

Processing performed by the parallel port A interrupt routine begins with the input of 16 bytes of label data from the scanner. If no start or stop stripe is present, or if the input (hardware) confidence number is too low, no further processing is done. Otherwise, the scan is unpacked and its parity is checked. The parity routine counts the number of valid modules. If all the modules are good and there is a true parity check, the label is sent to the "good label" buffer to be formatted for output. If not, the number of good modules is stored as the new confidence and a confidence threshold check is made. If the scan passes, the data are sent to the input buffer and the input semaphore and scan counter are incremented. After 64 scans have been input, label data interrupts are disabled.

The parallel port B (control register) routine reads the wheel sensor inputs, senses status changes and controls processing accordingly. When both sensors are on, the scanner is enabled. The end of the car is signified when either goes off. (For a field version, the scanner control would be reprogrammed since the wheel sensor inputs would not last the length of the car.)

Parity for an ACI label is computed by the following formula:

$$PARITY = MOD(11)[d0 + 2d1 + 4d2 + . . . + 512d9]$$

Parity may be calculated using a series of shifts and adds, but a table driven function is much faster, especially where different stripe values are being substituted in an attempt to get the correct parity. Accordingly, the routine uses a table which gives the modulo 11 change in parity produced by a given stripe value and digit position. The numerical value of the parity stripe is looked up in a separate table and is returned in a register.

The unpack routine unpacks raw scanner data into the following format:

BYTE	CONTENTS
1	Confidence
2	Start, Stop (bits 7,6)
3	Low order byte of time-to-start (8 bits)
4	High order byte of time-to-start (bits 0-5)
5	Inter-module period (bits 0-3)
6-18	Module code (only bits 0-3 are used; bits 4-7 are disregarded)

C.3 Program Module 3

This section is located between '800' and 'BFF' and contains processing stages 3 and 5. Stage 3 is a single routine which takes a scan and adds its various stripes to the table of stripe possibilities for each digit position. Stage 5 is comprised of 5 sections which are used to prepare the stripe possibilities for the parity tries in stage 6. The first section of stage 5 is called STAGE5 and is a small driving program which calls the four processing routines and handles the relevant semaphores.

Each module is composed of two half-modules or stripes, each of which may be black, red, blue, or white. There are 16 possible stripe color combinations that can occur in a module. Stripe values consist of four bits arranged as follows:

BIT	REPRESENTS
0	blue value of second half-module
1	red value of second half-module
2	blue value of first half-module
3	red value of first half-module

For the module combination blue/white, only blue is true in the first stripe while blue and red are true in the second. This module byte is 00000111. As stated above, only the right-hand four bits are considered. Bit 0 is the right-hand most bit. The stripe possibility table consists of 11 rows (10 stripes plus the parity stripe) of 16 columns each. The position within a row of any stripe is the value of that stripe itself. For the example above, for a row beginning at '3200', the address of the stripe in the example above would be '3207'. That address will contain the number of scans in which that stripe occurred at that digit position. As there are many locations in this table with no data, the first thing done in stage 5 is to compress the table. The original table is called FDGTBL and the compressed version is CNDNSD. At the time the table is condensed, those stripes occurring less than a given number of times are eliminated according to this table:

For This Many Total Scans	A Stripe Must Occur At Least This Many Times
0 - 15	2
16 - 31	3
32 - 64	4

It was found through examining dynamic test data that the greatest deviations occur in the first four stripes. The most accurate way of sorting these is to place the stripe in which the greatest amount of blue occurs at the head of a list of possibilities for that digit position. This is accomplished in subroutine VSORT, which looks up the relative "weight" of each stripe at the head of the list is most effective, and this is accomplished in subroutine SORT.

The final action of stage 5 is to remove non-valid stripes from the table and replace them with the most likely alternates. If a stripe is valid and it is the only one occurring for its digit position, no alternates are loaded. Otherwise, all available alternates are entered into the table. Subroutine LOAD does this processing and produced PROTLB, the protolabel table. Subroutine LOOKUP is called by LOAD to do the alternate stripe loading and to ensure that no stripe appears in a list twice.

C.4 Program Module 4

Module 4 contains the subprograms which perform parity tries on the protolabel. It resides in locations 'C00' to 'FFF'.

Subroutine STAGE6 is the driving program for this program module. It controls the trying of various stripe combinations to find a true parity check. It uses a table of deviation counts (DEVTBL) and a table of pointers (PTRTBL) to keep track of which stripes are being tried. All possibilities for the first digit position are tried, then the second possibility in the second row is tried and the stripes for the first row are repeated. The parity stripe is the last for which substitutions are made. A true parity check at any point halts the process and that stripe combination is sent by subroutine OUTPUT to the good label buffer. A number of utility routines are called by STAGE6 to perform housekeeping and computational tasks.

.C.5 Format and Output Driver Sections

STAGE7 is a small subprogram at location '200' which handles register setup and semaphores for the output formatting routine. That routine, called FORMAT, converts internal label data to ASCII codes for printing. A typical line of output appears below with an explanation of each item.

```
20 2- 1154.6 15.2 #8103079091*9
```

The two digit integer at the beginning of the line is the confidence. A 20 indicates that the label value was found with a true parity check in the input routine. The next two characters indicate whether a start and stop were found. An 'S' indicates that the stripe in question was present. The five digit number with the decimal point is the time in microseconds from the optical reference pulse to the start stripe for the scan. The three digit decimal number is the inter-module period is microseconds. Resolution is .8 microsecond. The pound symbol (#) always appears and represents the start stripe whether it was read correctly or not. The same is true for the asterisk, which represents the stop stripe. The ten numbers between them are the numerical values represented by the various stripes, while the final digit is the value of the parity stripe.

When STAGE6 outputs a label value, confidence is always a 10, there is no start or stop, the time-to-start-stripe is zero, and the inter-module period is 12.8. All output messages are terminated by a CR/LF followed by a null character. The TTY output driver sends a series of characters to the TTY until a null character is found. It is called TTYOUT, and runs at '220'.

D Operating Instructions

The program is fully operational as soon as power is turned on, although it may be necessary to hit Reset to make sure that everything is running properly. The user should ascertain that the baud rate switches on the MCB match the speed of the output device being used. Speed setting requires turning off PDP power, removing the MCB, and appropriately setting the switches.

E Routine Listings

Program listings can be obtained from TSC upon request.

APPENDIX D
PROGRAM LISTING

COPIES CAN BE OBTAINED FROM:

Technology Sharing Office/DTS-151
DOT/Transportation Systems Center
Kendall Square
Cambridge MA 02142